TENGEN

PRODUCT CATALOG

TENGEN Vision

To Be A Customer Trusted Enterprise In The World

Reliable Provider of Smart Power Distribution Solution

天正 TENGEN | Reliable Power for Better Life

Founded in 1990, **TENGEN** has been deeply engaged in the industry for more than three decades. Listed on the main board in 2020, it is a leading enterprise in the chinese low-voltage electrical industry.

TENGEN has been awarded the National Science and Technology Progress Award, National Green Factory, Future Factory of Zhejiang Province, and other honors.

TENGEN has nationally recognized enterprise technology center, CNAS laboratory, provincial key enterprise research institute, post-doctoral workstation and other scientific research carriers. The products cover the fields of power distribution, modular devices, control devices, medium-vvoltage apparatus and other fields, providing high-quality products and solutions for new energy, electric power, communication, construction, and other industries.

Based on cutting-edge technology and R&D strength, lean manufacturing capabilities, as well as digital, smart and customized products and solutions, TENGEN has become a reliable partner and choice of the top 10 enterprises in many industries.

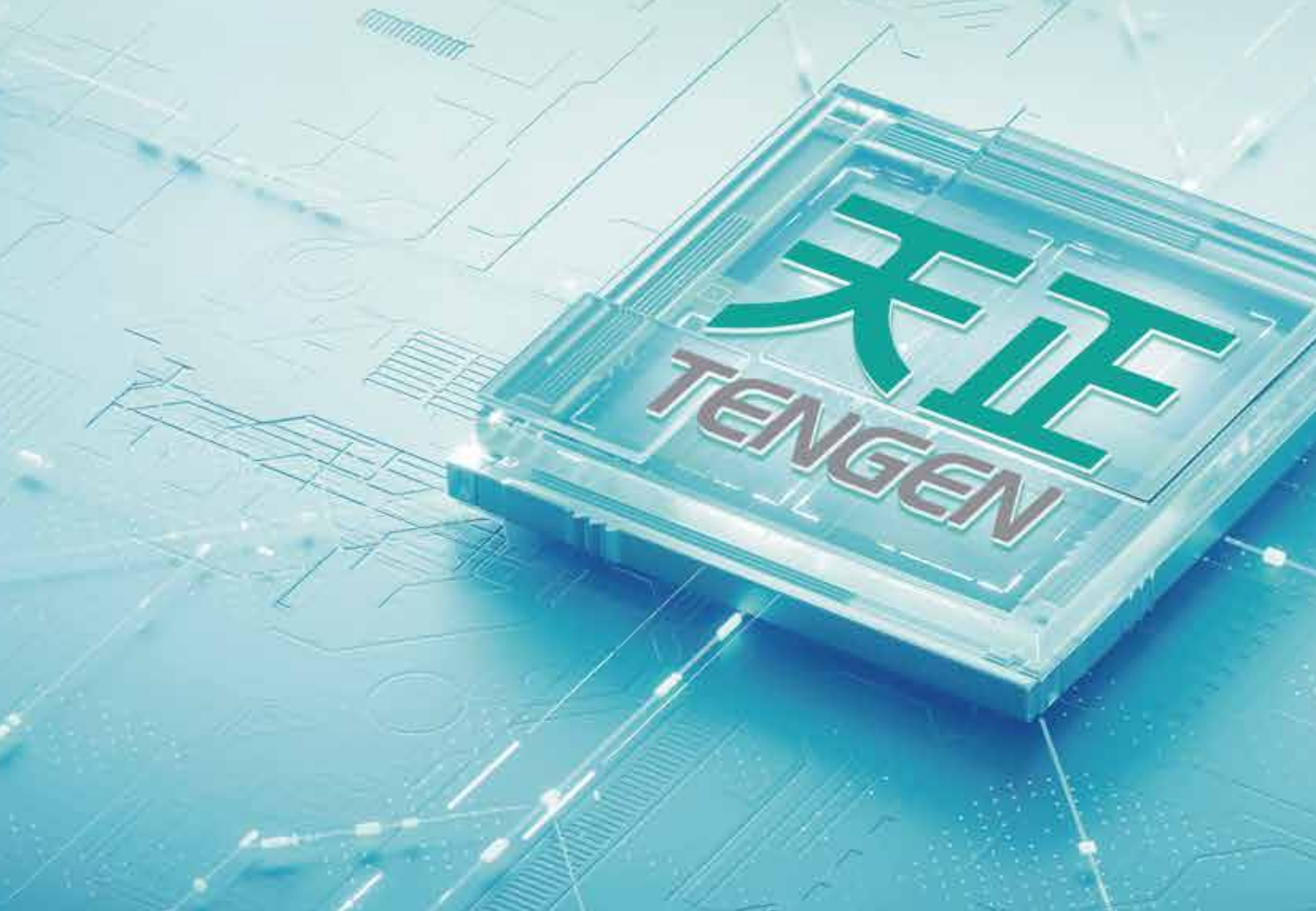

30+ years of Lean Smart Manufacturing experience in the industry

200+ industry Benchmark Solutions

Holding **1000+** Patents

The Reliable Choice of Top **10** Enterprises in the Industry

天正 TENGEN | Reliable Power for Better Life

MARKET LAYOUT

From Local Deep Exploration To Global Development

2+11

Rapid Logistics System

7*24Hour	**30,000Pcs/day**	**100%**	**50,000m³**
Service Response	Sorting Efficiency	Delivery	3D Warehouse Storage

4 INDUSTRIAL PARKS

Shanghai Industrial Park

01

Wenzhou Yanpan Smart Park

02

Wenzhou Sulv Industrial Park

03

Jiaxing Industrial Park

04

天正 TENGEN

Reliable Power
for Better Life

AUTOMATION
INNOVATION

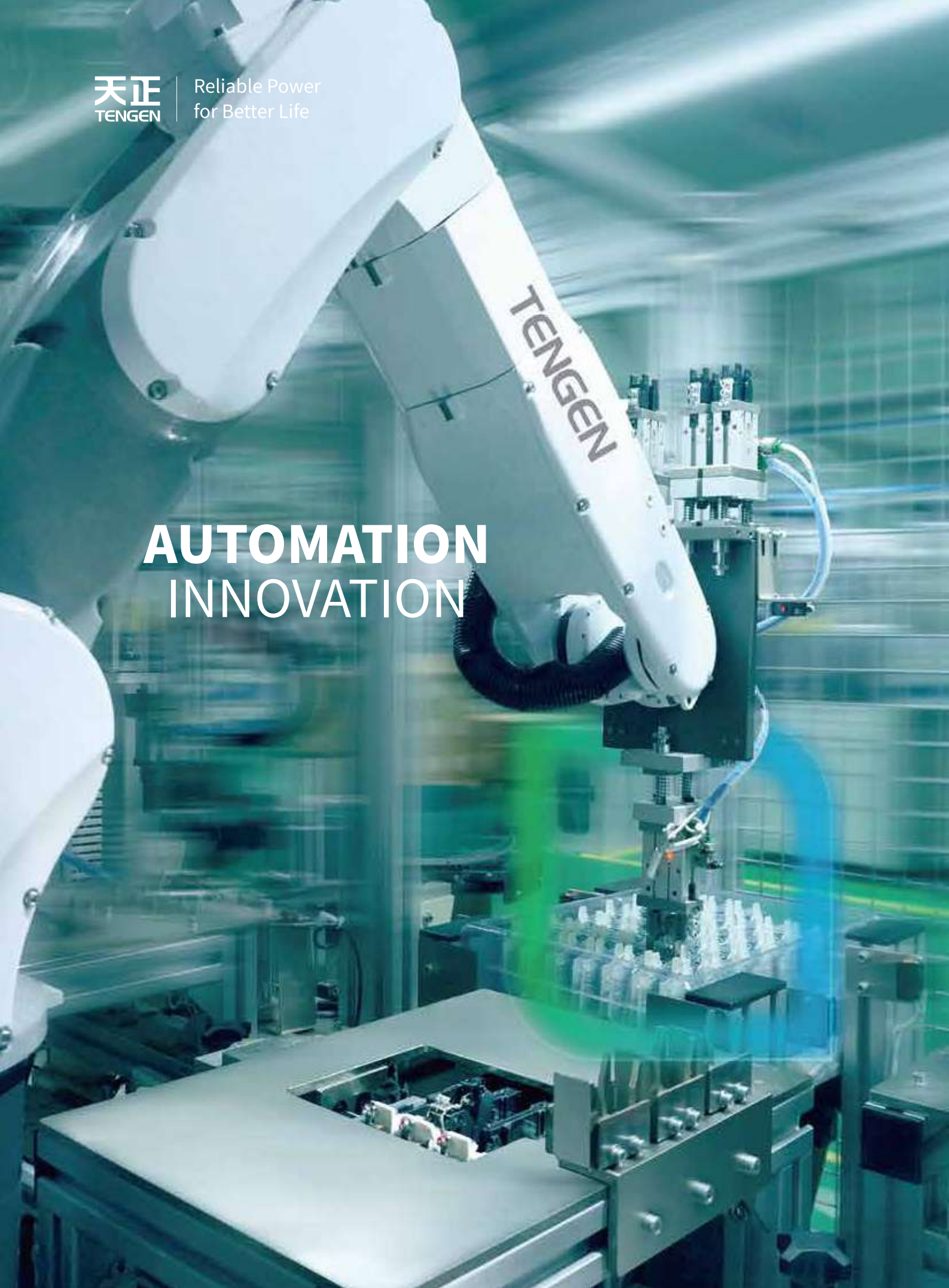

TENGEN

Smart Manufacturing

Digital Smart
Future Factory

Data-driven
More Efficient

Customized
Production

Collaborative &
Adjust to requirements

National
Green Factory

National Smart
Manufacturing

Provincial
Future Factory

天正 TENGEN | Reliable Power for Better Life

TENGEN
Research & Development

2	500+	1000+
R & D Centers	R & D Engineers	R & D Patents

- National Recognized Enterprise Technology Center
- Key Enterprise Research Institute in Zhejiang Province
- National Postdoctoral Research Station

5+ Key University-Enterprise Cooperation

4 Partners Joint R&D Information System

TENGEN Future Factory

Leading Intelligent Transformation

Digital Design

Factory modeling, digital and virtual

Intelligent Production

Data-driven, more efficient

Green Manufacturing

Low-carbon and environment-friendly

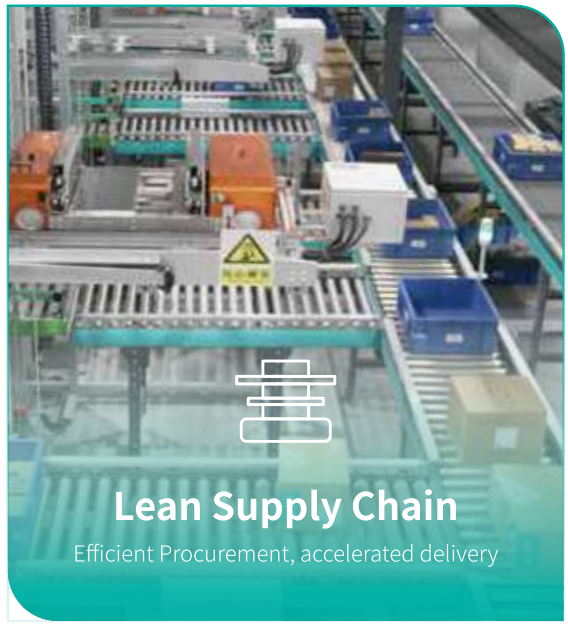

Lean Supply Chain

Efficient Procurement, accelerated delivery

4 Quality Management Systems

DQA SQA
MQA VQA

8 Management System Certifications

10+ Product Certifications

TENGEN
Customer Value Management

High Quality Product

- Stability
- Consistency
- Automation
- Informatization

Aim at Industrial Key Points

- Customization
- Cooperation
- Solutions

Integrated Service System

- Quick response
- Accelerated Delivery

CONTENTS

A
POWER DISTRIBUTION ELECTRICS

Air Circuit Breakers
A001-A094

Moulded Case Circuit Breakers
A095-A350

Moulded Case Circuit Breakers with Earth Leakage Protection
A351-A409

Automatic Transfer Switches
A410-A470

Knife Switched, Load Switches and Switch Discon-netors
A471-A522

Current Transform-ers and Voltage Stabilizers
A523-A546

Automatic Transfer Switches
A547-A559

B
MODULAR DEVICES

Miniature Circuit Breakers
B001-B061

Residual Current Circuit Breakers
B062-B067

Residual Current Circuit Breaker with Overcurrent Protection
B068-B091

Switch Disconnec-tors
B092-B093

Accessories of MCBs
B094-B114

Arc Fault Detection Device
B115-B117

Modular Contactors
B118-B123

Overvoltage and Undervoltage Protec tors
B124-B132

Surge Protective Devices
B133-B139

Metal Boxes
B140-B146

C
CONTROL DEVICES

Contactors
C001-C062

Relays
C063-C102

Motor Drive Apparatus
C103-C140

Transformers and Voltage Regulators
C141-C153

Buttons, Indicators and Switches
C154-C195

D
INSTRUMENTS & METERS

Analogue Panel Meters
D001-D008

Digital Meters
D009-D020

Electronic Meters
D021-D024

Smart Meters
D025-D026

Prepayment Meters
D027

E
Medium Voltage Apparatus

Vacuum Circuit Breakers
E001-E056

Load Switches and Switch Discon-netors
E057-E075

Surge Arrester and Drop-out Fuse
E076-E081

Switchgears
E082-E105

A

POWER DISTRIBUTION ELECTRICS

A001-A559

POWER DISTRIBUTION ELECTRICS

Air Circuit Breakers

Moulded Case Circuit Breakers

Moulded Case Circuit Breakers with Earth Leakage Protection

Automatic Transfer Switches

Knife Switched, Load Switches and Switch Disconnetors

Current Transformers and Voltage Stabiliz-ers

Automatic Transfer Switches

Air Circuit Breakers

TGW1N Series Air Circuit Breaker

Page 001

NEW

TEW5 Series Air Circuit Breaker

Page 053

Moulded Case Circuit Breakers

TGM1N Series Moulded Case Circuit Breaker-Thermal Magentic Type

Page 095

TGM1NE Series Moulded Case Circuit Breaker-Electronic Type

Page 119

NEW

TGM1E Series Moulded Case Circuit Breaker-LCD Type

Page 153

TGM1P Series Moulded Case Circuit Breaker with Electric Motor Operating Machanism

Page 165

NEW

TGM1BX Series Moulded Case Circuit Breaker

Page 173

TGM3 Series Moulded Case Circuit Breaker-Thermal Magentic Type

Page 189

TGM3E Series Moulded Case Circuit Breaker-Electronic Type

Page 205

TGM3G Series Moulded Case Disconnector

Page 228

TGM3DC Series Moulded Case DC Circuit Breaker

Page 233

NEW

TGM5 Series Moulded Case Circuit Breaker

Page 251

NEW

TEM5 Series Moulded Case Circuit Breaker

Page 265

NEW

TEM5E Series Moulded Case Circuit Breaker

Page 290

NEW

TEM7E Series Moulded Case Circuit Breaker

Page 308

Moulded Case Circuit Breakers with Earth Leakage Protection

TGM1NL Series Moulded Case Circuit Breaker with Earth Leakage Protection-A/AC Type

Page 351

TGM3L Series Moulded Case Circuit Breaker with Earth Leakage Protection-A/AC Type

Page 373

TGM1EL Series Moulded Case Circuit Breaker with Earth Leakage Protection

Page 391

TGM2LC Series Moulded Case Circuit Breaker with Earth Leakage Protection

Page 403

Automatic Transfer Switches

TGQ1N Series Automatic Transfer Switch

Page 410

TGLD Series Automatic Transfer Switch

Page 438

TGQ1NP Series Automatic Transfer Switch

Page 428

TGQ1NPL Series Automatic Transfer Switch

Page 450

Knife Switched, Load Switches and Switch Disconnectors

GL Load-break Switch

Page 471

NEW

GL Series Switch Disconnector (YUN 3.0 Series)

Page 483

HD, HS Knife Switch

Page 489

HD11F Knife Switch

Page 500

HS11FD Disconnector With Protective Cover and Grounding Protection

Page 503

HD11, HS11/B Knife Switch with Protective Cover

Page 507

NEW

TGHD Switch Disconnector

Page 511

NEW

TGHRT17 Fuse Switch Disconnector

Page 516

NEW

TGHT17 Switch Disconnector

Page 519

NEW

HR17N/D Switch Disconnector

Page 521

Current Transformers and Voltage Stabilizers

NEW

BH-K Split-core Current Transformer

Page 523

BH-0.66 I Type Current Transformer

Page 525

BH(SDH)-0.66 II Type Current Transformer

Page 528

BH-0.66 III Type Current Transformer

Page 532

LMZJ1-0.5 Current Transformer

Page 535

LMZJ1-0.66 Current Transformer

Page 538

TND、TDS Series Voltage Stabilizer

Page 541

DBW/SBW Series High-Power Compensated Voltage Stabilizer

Page 544

Automatic Transfer Switches

RT16 Series AC Knife Contact Fuse

Page 547

RT18-PV DC Photovoltaic Fuse

Page 555

RT18 Series Cylindrical Cap Fuse

Page 550

RT18G-PV DC Photovoltaic Fuse

Page 557

TGW1N Series Air Circuit Breaker

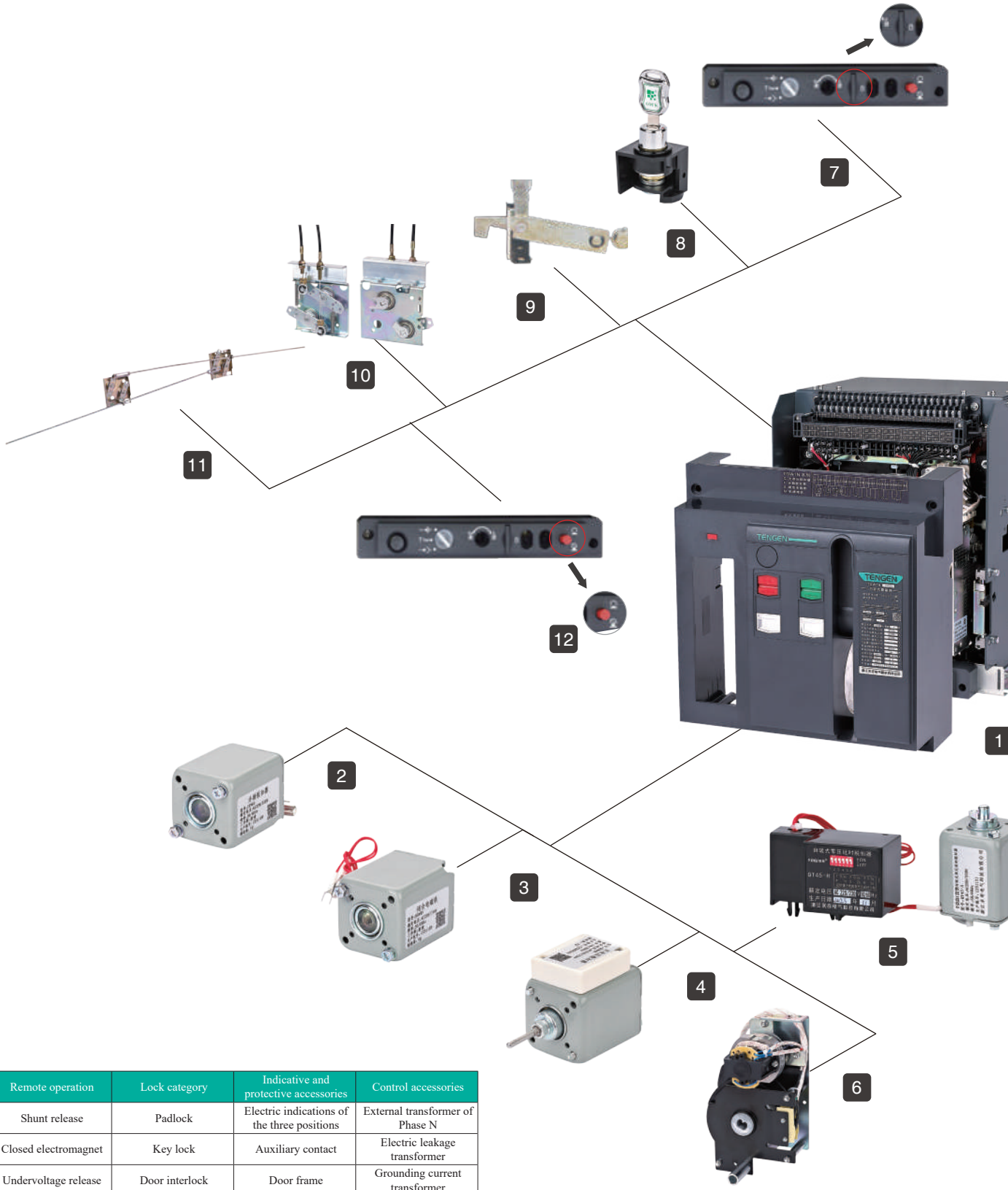

Remote operation	Lock category	Indicative and protective accessories	Control accessories
Shunt release	Padlock	Electric indications of the three positions	External transformer of Phase N
Closed electromagnet	Key lock	Auxiliary contact	Electric leakage transformer
Undervoltage release	Door interlock	Door frame	Grounding current transformer
Undervoltage time-delay release	Three-position lock	Phase partition	Power supply module
Motor-operated mechanism	Mechanical interlock		Relay module

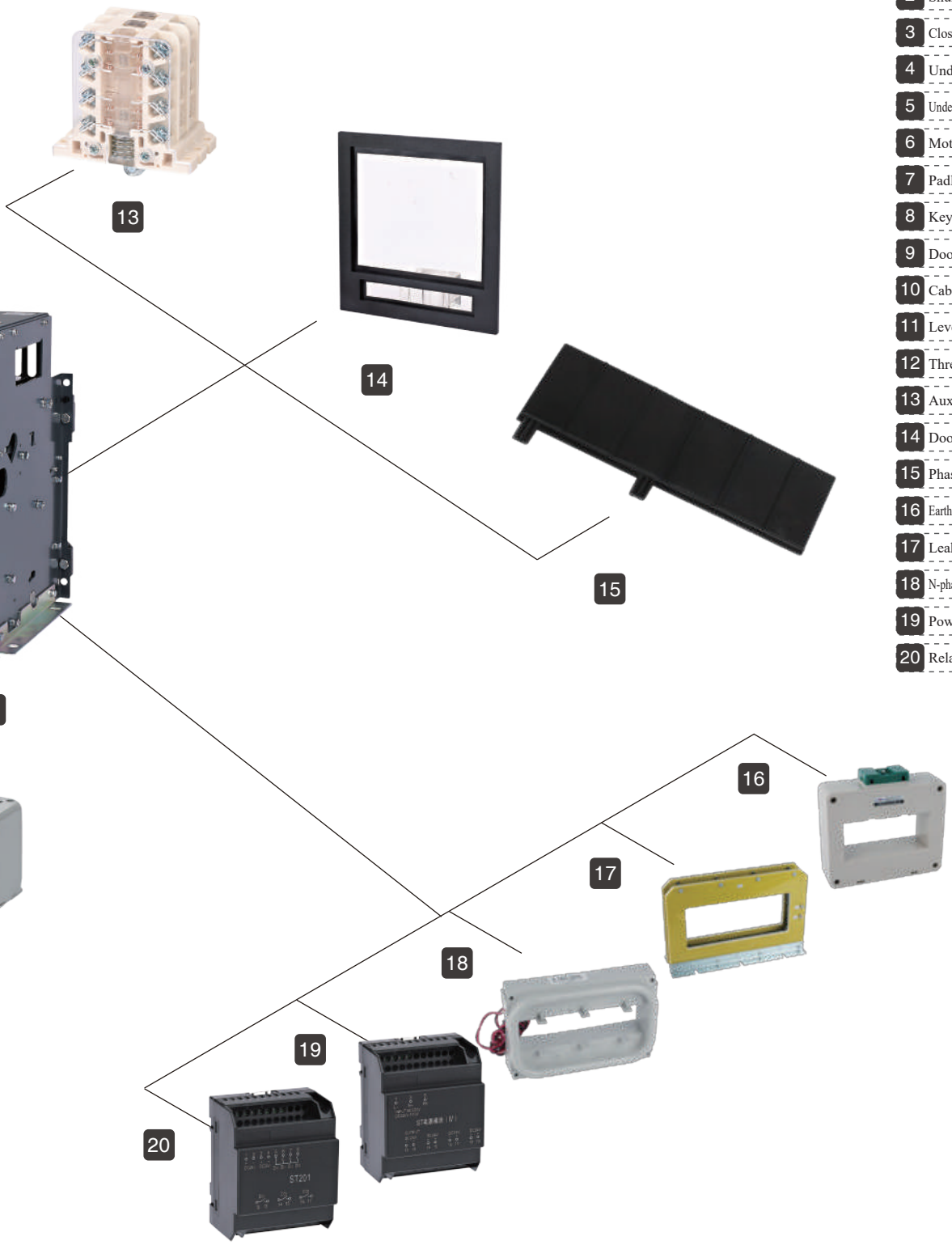

1 Air Circuit Breakers
2 Shunt release
3 Closing electromagnet
4 Undervoltage release
5 Undervoltage delay release
6 Motor mechanism
7 Padlock
8 Key lock
9 Door interlock
10 Cable interlock
11 Lever interlock
12 Three-position lock
13 Aux. switch
14 Door frame
15 Phase partition
16 Earthing current transformers
17 Leakage transformer
18 N-phase external transformer
19 Power module
20 Relay module

TGW1N Series Air Circuit Breaker

1 Overview

TGW1N series Air Circuit Breaker (hereinafter referred to as the circuit breaker) is suitable for distribution network with AC 50Hz, rated voltage of AC380V-AC690V, rated current of 200A-6,300A. It is used for distributing electric energy and protecting circuits and power units from overload, short circuit, undervoltage, one-phase ground or residual current. The circuit breaker has the functions of communication and intelligent protection, which can improve the reliability of power supply and avoid unnecessary power failure. It can fully replace CW45 products in the market with its excellent breaking performance and high quality.

International Standard and Certification: CE CB

Comply with the standard: IEC/EN60947-2

2 Type Designation

TG W 1N 2000 H / 3P □ □ □ □ □ □ □ □ □ □

- Special requirements: Default: No lever interlock / cable interlock / one lock and one key / two locks and one key / three locks and one key / extended busbar / electrical three-position indicator / door interlock / dual power controller button lock
- Application: Default: None
  Plateau Damp and heat Environmental protection Salt spray Low temperature
- Auxiliary contact code: No code: 4NO+4NC
  Other requirements, please specify, for example 5NO+5NC ,6NO+6NC
- Undervoltage release voltage: Default: No
  AC220V/230V AC380V/400V When the undervoltage voltage is inconsistent with the control circuit voltage, please specify this
- Undervoltage time delay: 1s
- Control circuit voltage: AC220V/230V AC380V/400V DC220V DC110V
  If there are multiple voltage grades, indicate them in the special instructions
- Controller code: Default: M type
  For other types of controller, please specify: 3M type 3H type 3P+N (T type) 3P+N (W type)
- Wiring method: Horizontal Vertical Upper horizontal and lower vertical wiring Lower horizontal and upper vertical wiring
- Installation mode: Fixed type
  Drawer type
- Rated current: 200A …… 6300A
- Number of poles: 3P 4P
- Breaking capacity: None: Conventional type
  H: High breaking
- Frame current:
  1600 2000 2500 3200 4000 6300
- Design code
- Frame code
- Enterprise code

TGW1N Series Air Circuit Breaker

3 Technical Parameters

Basic parameters							
Frame current (A)		1000		1600		2000	
Rated working voltage Ue(V)		AC380/400/415V/660/690V					
Rated insulation voltage Ui(V)		1000					
Rated impulse withstand voltage Uimp(kV)		12					
Frequency (HZ)		50/60					
Usage category		B					
Number of poles		3P/4P					
Maximum continuous current of N pole (A)		100%In					
Full-breaking delay time without addition (ms)		≤30					
Closing time (ms)		≤70					
Flashover distance (mm)		0					
Rated current In(A)		200/400/630 800/1000		200/400/630 800/1000 1250/1600		200/250/400/500/ 630/800/1000/1250/ 1600/1900/2000	
Breaking capacity							
Breaking capacity		Conventional	H	Conventional	H	Conventional	H
Rated ultimate short-circuit breaking capacity Icu(kA)	AC415V	50	66	50	66	80	90
	AC690V	36	42	36	42	50	65
Rated operating short-circuit breaking capacity Ics(kA)	AC415V	50	55	50	55	80	90
	AC690V	36	42	36	42	50	65
Rated short-time withstand current Icw(kA)/1s	AC415V	42	55	42	55	55	65
	AC690V	36	36	36	36	50	55
Rated short-time withstand current Icw(kA)/0.5s	AC415V	/	/	/	/	/	75
	AC690V	/	/	/	/	/	65
Rated short-circuit making capability Icm(kA)	AC415V	110	121	110	121	176	198
	AC690V	55	66	55	66	110	143
Lifetime of product							
Electrical life (times)	AC400V	8,000		8,000		8,000	
	AC690V	3,000		3,000		3,000	
Mechanical life (times)	Without maintenance	15,000		15,000		15,000	
	With With maintenance	30,000		30,000		30,000	
Standard configuration		Fixed	Drawer-type	Fixed	Drawer-type	Fixed	Drawer-type
The body of the circuit breaker		■	■	■	■	■	■
Drawer base		–	■	–	■	–	■
Intelligent controller		■	■	■	■	■	■
Upper and lower horizontal connecting wires		■	■	■	■	■	■
Indicating contact of opening/closing		■	■	■	■	■	■
Indicating contact of fault tripping		■	■	■	■	■	■
Auxiliary contact 4NO+4NC		■	■	■	■	■	■
Electric motor operating mechanism		■	■	■	■	■	■
Closing electromagnet		■	■	■	■	■	■
Shunt release		■	■	■	■	■	■
Phase partition		□	□	□	□	□	□
Optional accessories							
Instantaneous undervoltage release		□	□	□	□	□	□
Time-delay undervoltage release		□	□	□	□	□	□
Opening and closing button lock		□	□	□	□	□	□
Lock for the drawer base		□	□	□	□	□	□
Lock for the separation position of the drawer seat		□	□	□	□	□	□
Key lock		□	□	□	□	□	□
Door interlock		□	□	□	□	□	□
Auxiliary contact 6NO+6NC		□	□	□	□	□	□
Electric indications of three positions on the drawer base		□	□	□	□	□	□
Steel cable interlock		□	□	□	□	□	□
Locking interlock		□	□	□	□	□	□
Dual power controller		□	□	□	□	□	□
External neutral line transformer		□	□	□	□	□	□
Zero-sequence transformer		□	□	□	□	□	□
Ground current transformer and its accessories		□	□	□	□	□	□

■ Standard configuration □ Optional

TGW1N Series Air Circuit Breaker

Basic parameters								
Frame current (A)		2500		3200		4000		6300
Rated working voltage Ue(V)		AC380/400/415V/660/690V						
Rated insulation voltage Ui(V)		1000						
Rated impulse withstand voltage Uimp(kV)		12						
Frequency (HZ)		50/60						
Usage category		B						
Number of poles		3P/4P						
Maximum continuous current of N pole (A)		100%In				/		50%In
Full-breaking delay time without addition (ms)		≤30						
Closing time (ms)		≤70						
Flashover distance (mm)		0						
Rated current In(A)		630/800/1000/1250/1600/2000 2500		2000/2500 2900/3150 3200		2500/2900/3200/3600/3900/4000		4000/4900 5000/5900 6300
Breaking capacity								
Breaking capacity		Conventional	H	Conventional	H	—	H	—
Rated ultimate short-circuit breaking capacity Icu(kA)	AC415V	100	100	100	100	100	100	120
	AC690V	65	70	65	70	65	85	85
Rated operating short-circuit breaking capacity Ics(kA)	AC415V	80	100	80	100	85	100	100
	AC690V	65	70	65	70	65	85	85
Rated short-time withstand current Icw(kA)/1s	AC415V	80	85	80	85	85	90	100
	AC690V	65	70	65	70	65	85	85
Rated short-time withstand current Icw(kA)/0.5s	AC415V	/	100	/	100	/	100	/
	AC690V	/	65	/	65	/	65	/
Rated short-circuit making capability Icm(kA)	AC415V	110	121	110	121	176	198	264
	AC690V	55	66	55	66	110	143	165
Lifetime of product								
Electrical life (times)	AC400V	6,000		6,000		6,000		1,500
	AC690V	2,000		2,000		2,000		1,000
Mechanical life (times)	Without maintenance	10,000		10,000		10,000		5,000
	With With maintenance	20,000		20,000		20,000		10,000

Standard configuration	Fixed	Drawer-type	Fixed	Drawer-type	Fixed	Drawer-type	Fixed	Drawer-type
The body of the circuit breaker	■	■	■	■	■	■	■	■
Drawer base	–	■	–	■	–	■	–	■
Intelligent controller	■	■	■	■	■	■	■	■
Upper and lower horizontal connecting wires	■	■	■	■	■	■	■	■
Indicating contact of opening/closing	■	■	■	■	■	■	■	■
Indicating contact of fault tripping	■	■	■	■	■	■	■	■
Auxiliary contact 4NO+4NC	■	■	■	■	■	■	■	■
Electric motor operating mechanism	■	■	■	■	■	■	■	■
Closing electromagnet	■	■	■	■	■	■	■	■
Shunt release	■	■	■	■	■	■	■	■
Phase partition	□	□	□	□	□	□	□	□
Optional accessories								
Instantaneous undervoltage release	□	□	□	□	□	□	□	□
Time-delay undervoltage release	□	□	□	□	□	□	□	□
Opening and closing button lock	□	□	□	□	□	□	□	□
Lock for the drawer base	□	□	□	□	□	□	□	□
Lock for the separation position of the drawer seat	□	□	□	□	□	□	□	□
Key lock	□	□	□	□	□	□	□	□
Door interlock	□	□	□	□	□	□	□	□
Auxiliary contact 6NO+6NC	□	□	□	□	□	□	□	□
Electric indications of three positions on the drawer base	□	□	□	□	□	□	□	□
Steel cable interlock	□	□	□	□	□	□	□	□
Locking interlock	□	□	□	□	□	□	□	□
Dual power controller	□	□	□	□	□	□	□	□
External neutral line transformer	□	□	□	□	□	□	□	□
Zero-sequence transformer	□	□	□	□	□	□	□	□
Ground current transformer and its accessories	□	□	□	□	□	□	□	□

■ Standard configuration □ Optional

TGW1N Series Air Circuit Breaker

4 Operating Conditions

4.1 Ambient temperature

4.2 Installation category

Class IV for main circuits of the circuit breaker and voltage tripper coil and primary coil of power transformer; Class III for auxiliary circuit and control circuits. The inclination with the vertical plane does not exceed 5° when installation.

4.3 Pollution degree: 3

4.4 Altitude ≤2,000 meters, derating when above 2,000 meters.

4.5 Atmospheric conditions

The relative humidity does not exceed 50% at the ambient temperature of +40°C, and a higher relative humidity at the lower temperature may be allowed;

The relative humidity at the low temperature +25°C can be up to 90%. The necessary measures can be taken for condensation on the product surface due to temperature changes.

4.6 Protection grade: IP20 for the front and IP00 for the remaining

4.7 Electromagnetic interference: Suitable for electromagnetic environment A

5 Product Structure

5.1 External structure

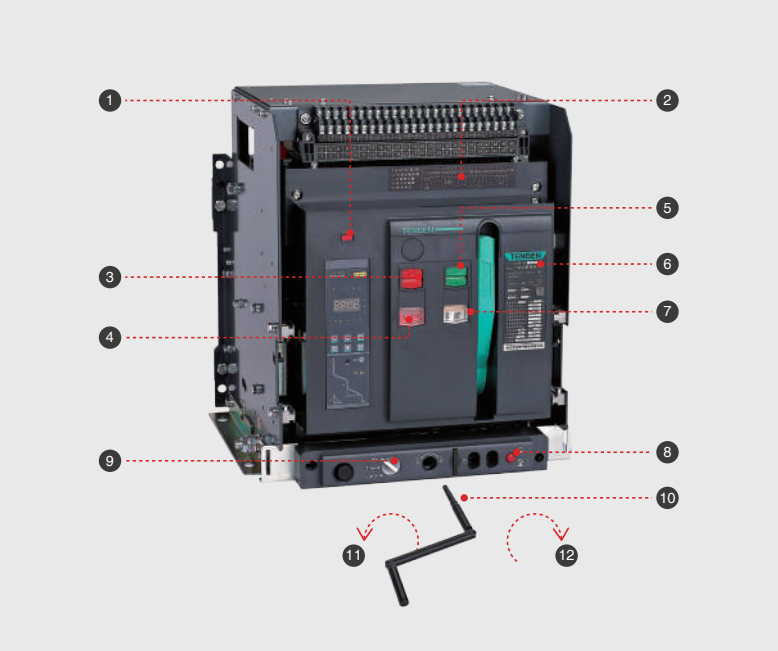

1 Reset button for fault trip indication

2 Shell

3 Switching-OFF button

4 Indictor of circuit breaker closed and open

5 Switching-ON button

6 Nameplate

7 Energy storage/release indicator light

8 Drawer three-position button

9 Indication of connection, test and separation positions

10 Jiggle bar

11 Screw out

12 Screw in

TGW1N Series Air Circuit Breaker

5.2 Internal structure

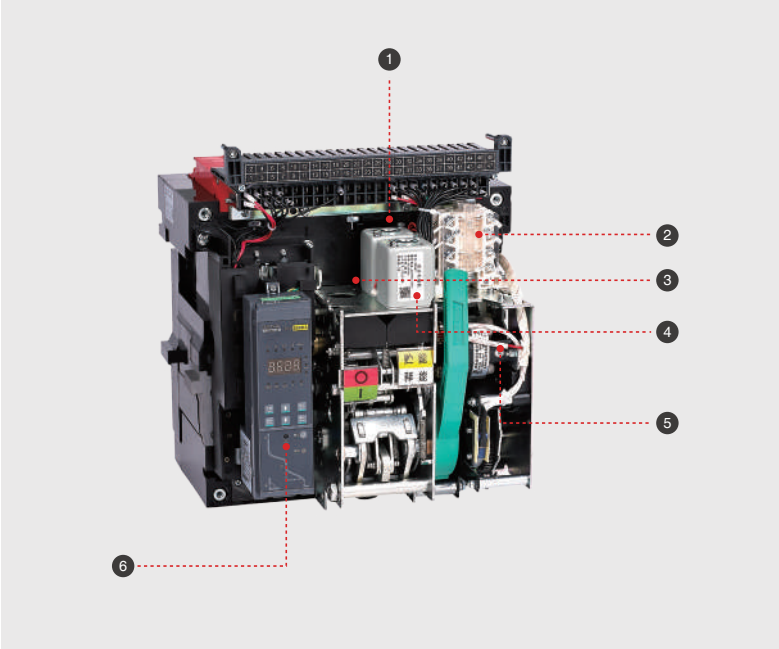

1 Shunt release

2 Auxiliary contact

3 Undervoltage release

4 Closing electromagnet

5 Electric energy storage mechanism

6 Intelligent controller

TGW1N Series Air Circuit Breaker

6 Intelligent Controller

6.1 TGW1N-1000/1600 controller

6.1.1 TGW1N-M type

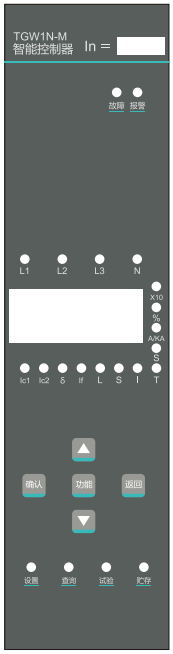

Instructions of key:

- 确认 "Enter" key, for entering the next level menu pointed by the current project or select the current parameter, or store the parameter.
- 功能 "Function" key, for entering the measurement and protection setting function.
- 返回 "Return" key, for returning to the previous menu or cancelling the current parameter, or returning to the main interface.
- ▲ "Up" key, for moving the cursor upward or increasing the parameter.
- ▼ "Down" key: for moving the cursor downward or decreasing the parameter.

Instructions of indicator lights:

"Fault": Tripping fault

"Alarm": Failure alarm

"L1 L2 L3 N": Current indicator lights, representing: Phase A, Phase B, Phase C and Phase N respectively

"X10": Indicator light of the action times of the switch

"A/KA": Current unit indicator light:

"Setting, query, test, storage": Indicator light for controller operation

"IC1": Load monitoring 1 indicator light

"δ": Current unbalance indicator light

"L": Long-time delay indicator light

"I": Instantaneous indicator light

"%": Contact wear indicator light

"S": Time unit indicator light

"IC2": Load monitoring 2 indicator light

"If": Grounding indicator light

"T": Self-diagnosis indicator light

6.1.2 TGW1N-3M/3H type

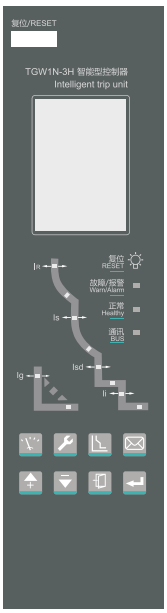

Instructions of key:

- "Measure" key, for switching to "measure" interface (it is "left" key in the password input interface).
- default translation
- "Set" key, for switching to "system parameter setting" interface (it is "right" key in the password input interface).
- "Protection" key, for switching to the "protection parameter setting" interface.
- "Information" key, for switching to the "information record" interfaces.
- "Up" key, for moving the cursor upward or increasing the parameter.
- "Down" key, for moving the cursor downward or decreasing the parameter.
- "Return" key, for returning to the previous menu or cancelling the current parameter, or returning to the main interface.
- "Enter" key, for entering the next level menu pointed by the current project or select the current parameter, or store the parameter.

"IR" is the indicator light of overload long-time delay fault, which will be on after parameter setting and fault tripping.
"Isd" is the indicator light of short circuit short-time delay fault, which will be on after parameter setting and fault tripping.
"Ii" is the indicator light of short circuit instantaneous fault, which will be on after parameter setting and fault tripping.
"Ig" is the indicator light of ground fault, which will be on after parameter setting and fault tripping.

"Fault / Alarm": Fault or alarm indicator light
"Normal": Controller normal operation indicator light
"Communication": Communication indicator light

TGW1N Series Air Circuit Breaker

6.2 TGW1N-2000-6300 controller

6.2.1 TGW1N-M type (LED display)

Instructions of key:

- “Set” key, for entering the measurement and protection setting function.
- “Up” key, for moving the cursor upward or increasing the parameter.
- “Return” key, for returning to the previous menu or cancelling the current parameter, or returning to the main interface.
- “Check” key, enter the setting and information.
- “Down” key, for moving the cursor downward or decreasing the parameter.
- “Enter” key, for entering the next level menu pointed by the current project or select the current parameter, or store the parameter.
- “TEST” key, for instantaneous trip test.
- “Reset” key, for exiting the fault display status.

Instructions of indicator lights:

“In”: Indicate the rated current of the controller
“G”: Grounding or electric leakage current indicator light
“L1 L2 L3”: Current indicator lights, representing: Phase A, Phase B and Phase C
“A/KA”: Current unit indicator light:
“TEST”: Function test indicator light
“IC1”: Load monitoring 1 protection indicator light
“δ”: Current unbalance indicator light
“IR”: Long-time delay protection indicator light
“Status”: Controller operation status indicator light;
Green: Represent normal operation;
Blue: Represent protection alarm;
Red: Represent protection action and controller tripping.
“Ii”: Instantaneous indicator light
“MAX”: Maximum current indicator light for Phase A, Phase B and Phase C
“S”: Time unit indicator light
“IC2”: Load monitoring 2 protection indicator light
“N”: Phase N indicator light
“Isd”: Short-time delay protection indicator light
“Ig”: Ground protection indicator light

6.2.2 TGW1N-3M/3H type (LCD display)

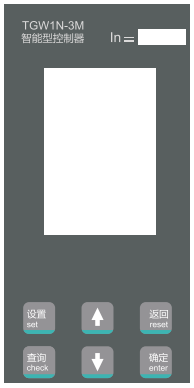

Instructions of key:

- “Set” key, for entering the measurement and protection setting function.
- "Up" key for moving the cursor upward or increasing the parameter.
- “Return” key, for returning to the previous menu or cancelling the current parameter, or returning to the main interface.
- “Check” key, enter the setting and information.
- “Down” key, for moving the cursor downward or decreasing the parameter.
- “Check” key, for entering the next level menu pointed by the current project or select the current parameter, or store the parameter.
- “TEST” key, for instantaneous trip test.
- “Reset” key, for exiting the fault display status.

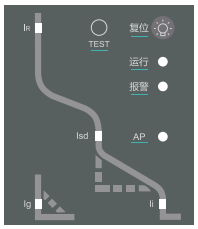

Instructions of indicator lights:

“IR” is the indicator light of overload long-time delay fault, which will be on after parameter setting and fault tripping.
“Isd” is the indicator light of short circuit short-time delay fault, which will be on after parameter setting and fault tripping.
“Ii” is the indicator light of short circuit instantaneous fault, which will be on after parameter setting and fault tripping.
“Ig” is the indicator light of ground fault, which will be on after parameter setting and fault tripping.
“AP”: Advanced protection failure indication (such as: phase loss, overvoltage, voltage unbalance, under-frequency, over-frequency, phase sequence, reverse power and other fault tripping. If it only alarms and doesn’t trip, the "alarm" lamp will be on.))

“Operation” lamp flicker represents that the controller works normally.
“Alarm” lamp flicker represents fault tripping. If it keeps on, it represents alarm.
“Communication” lamp flicker represents that it is communicating.

TGW1N Series Air Circuit Breaker

6.3 Differences of intelligent controllers

Function configuration	Model and specification of the intelligent controller			Remarks
	M	3M	3H	
Current display function	√	√	√	①
Overload long-time delay protection (inverse time-delay)	√	√	√	
Short circuit short-time delay (definite time-delay + inverse time-delay)	√	√	√	
Instantaneous short circuit protection	√	√	√	
Single-phase grounding protection	√	√	√	
Current unbalance protection	√	√	√	
Parameter setting function	√	√	√	
Simulation test function	√	√	√	
Check function	√	√	√	
Self-diagnostic function	○	√	√	
Programming interface function	△	△	△	
Communicating and networking function	△	△	√	
Record of contact equivalent	△	√	√	
Record of operation times	△	√	√	
Clock record	△	√	√	
Alarm records	△	√	√	
Displacement record	△	√	√	
Historical peak current record	△	√	√	
MCR and HSISC functions	○	○	○	
Electric leakage protection (inverse time-delay and definite time-delay)	○	○	○	
Neutral phase (N-phase) protection	○	○	√	
Load monitoring function (Method I or Method II)	○	√	√	
Voltage measurement display function	△	○	√	
Frequency measurement display function	△	○	√	
Display of unbalanced voltage measurement	△	○	√	
Power measurement display function	△	○	√	
Electric energy measurement and display function	△	○	√	
Fault clock function	△	√	√	
Historical data recording function	√	√	√	
Phase sequence test	△	○	√	
Harmonic measurement function	△	○	√	
Harmonic impact factor function	△	○	√	
Overvoltage and undervoltage protection	△	○	√	
Voltage unbalance protection	△	○	√	
Over-frequency and under-frequency protection	△	○	√	
Phase sequence protection	△	○	√	
Inverse power protection	△	○	√	
Demand value protection	△	○	○	
Location lock function	△	△	△	
Thermal memory function	√	√	√	
Relay output function	△	○	√	

1. Note: "√" represents default configuration function; "○" represents optional function; " △ " represents unsupported functions.
2. Remarks: ① Conventional product of TGW1N series is M controller

TGW1N Series Air Circuit Breaker

7 Protective Characteristics of the Intelligent Controller

7.1 Protective characteristics of the intelligent controller

Protective characteristics of the intelligent controller include inverse time-delay and definite time-delay. When the fault current exceeds the inverse time-delay setting value, the controller provides the time-delay protection function according to the definite time-delay.

7.1.1 Overload long-time delay protection features

Overload long-time delay protection		<1.05IR: >2h Inaction; >1.3IR; <1h Action						
Range of IR current setting value		（0.4 ～ 1.0）In+OFF						
Inverse time-delay action features		$t=(1.5/N)^2*t_R$						
Setting scope of the time t_R		15s	30s	60s	120s	240s	480s	OFF
Action time s	$1.5I_R$	15s	30s	60s	120s	240s	480s	Alarm
	$6I_R$	0.938s	1.875s	3.75s	7.5s	15s	30s	
	$7.2I_R$	0.651s	1.302s	2.604s	5.208s	10.4s	20.8s	
Thermal memory time		30min(ON)/OFF						

Note: N Fault current divide the multiple of setting current I/I_R
t Fault action delay time
t_R Long-time delay action setting value
Allowable error of action time ±10%

7.1.2 Short circuit short-time delay protection features

Short circuit short-time delay protection		<0. 9Isd; Inaction; >1.1Isd: Action						
Range of Isd current setting value		（0.4 ～ 15）In+OFF						
Setting scope of the time tsd		0.1s 0.2s 0.3s 0.4s OFF						
Action time s	$Isd < I \leq 8I_R$	Inverse time-delay	Action feature	$I^2t=(8I_R)^2tsd$				
	I ＞ 8Isd	Definite time-delay	Setting time s (tsd)	0.1	0.2	0.3	0.4	Alarm
			Time-delay (ms)	60	160	255	340	
			Maximum disconnection time (ms)	140	240	345	460	

Note: Isd Short-time delay current setting value
I Fault current value
I_R Long-time delay setting value
tsd Short-time delay inverse time-delay setting value
Allowable error of action time ±15%

7.1.3 Instantaneous short circuit protection features

Threshold value of short circuit instantaneous protection action	≤0.85Ii: Inaction; >1.15Ii: Action;
1600AF, 2000AF: 1.0In ~ 50kA+OFF (Setting step length of 1A)	
2500AF, 3200AF,4000AF: 1.0In ~ 75kA+OFF (Setting step length of 2A)	
6300AF: 1.0In ~ 100kA+OFF (Setting step length of 2A)	
Accuracy: Less than 100ms (including the inherent breaking time of the circuit breaker)	

TGW1N Series Air Circuit Breaker

7.1.4 Ground fault protection features

Ground fault protection action threshold value		< 0.9Ig; Inaction > 1.1Ig; Action					
Current setting value		(0. 2 ~1. 0) In+OFF 100A min					
Setting scope of the time tg		0.1s 0.2s 0.3s 0.4s OFF					
tg(s)		Action feature					
	tg	0.1s	0.2s	0.3s	0.4s	0.4s	OFF
	Time-delay	60	160	255	340	340	Alarm
	Maximum disconnection time (ms)	140	240	345	460	460	
		Allowable error of action time ±15%					

7.1.5 Intelligent controller factory setting value

Tripping curve I^2t	Long-time delay	Short-time delay	Instantaneous	Instantaneous fault	Thermal memory
	I_R t_R	Isd tsd	Ii	Ig tg	
	1.0In 60s	8In 0.2s	12In	0.8In 0.4s	OFF

7.2 Grounding current protection

7.2.1 3PT type (Standard)

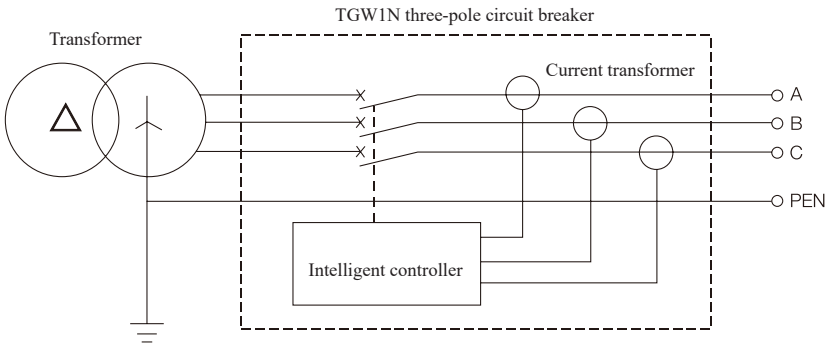

Differential ground fault protection, with the signal from the vector sum of three-phase current (Three-phase unbalance)

TGW1N Series Air Circuit Breaker

7.2.2 4PT type

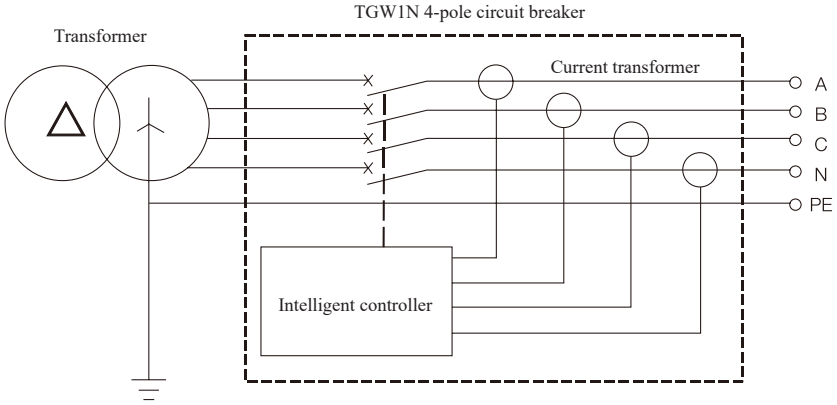

Differential ground fault protection, with the signal from of the vector sum of three-phase current and N pole current

7.2.3 (3P+N)T type

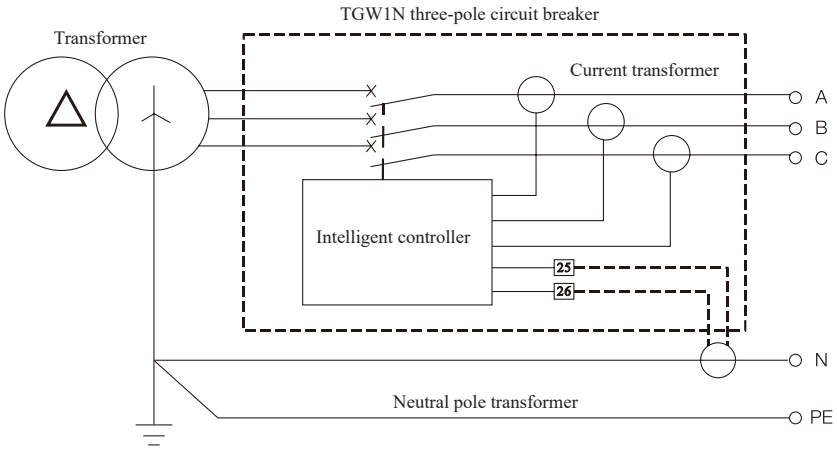

Differential ground fault protection for external neutral pole transformer, with the signal from the vector sum of three-phase current and N pole current only

7.2.4 (3P+N) W type

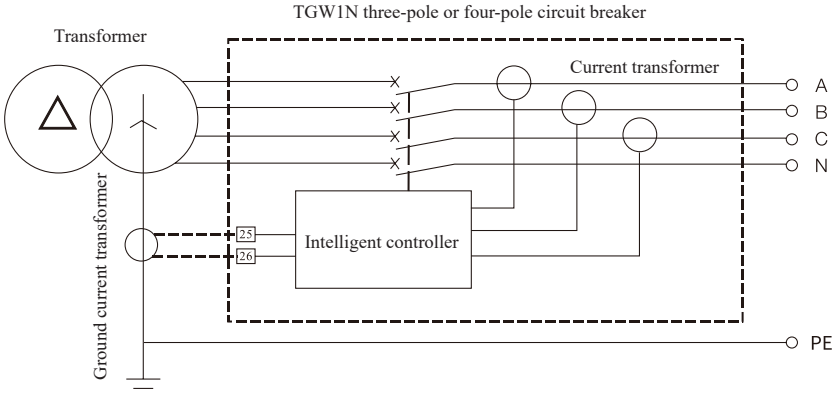

Ground current type ground fault protection of the external grounding current transformer, with the signal between the neutral point of the main power supply and ground.

TGW1N Series Air Circuit Breaker

8 Measurement Accuracy of the Controller

Current measurement	
Measurement range	Ia, Ib, Ic and IN less than 15IN (rated current of circuit breaker)
Measurement accuracy	Below 0.1In; it is inaccurate during measurement
	0.1In-0.4In; the accuracy will change from 5% to 2% linearly
	0.4In - 1.5In; the accuracy is 2%
	Above 1.5In; the accuracy will change from 2% to 15% linearly
Voltage measurement	
Measurement range	Line voltage: (0~1200)V
Measurement accuracy	Phase voltage: (0~690)V
	Error: ±1%
Frequency	
Measurement range	40Hz~70Hz
Error	±0.1Hz
Power	
Measurement mode	Effective value
Measurement contents	3P type: Total active power, total reactive power and total apparent power
	4P type: Split-phase active power, split-phase reactive power, split-phase apparent power, total active power, total reactive power, total apparent power
Measurement range	Active power: -32768KW~+32767KW
	Reactive power: -32768Kvar~+32767Kvar
	Apparent power: 0KVA~65535Kvar
	Error: ±2.5%
Power factor	
Measurement contents	3P type: Total power factor
	4P type: Split-phase power factor of each
Measurement range	-1.00~+1.00
Electric energy	
Measurement contents	Input reactive electric energy (EQin), output reactive electric energy (EQout)
	Input active electric energy (EQin), output reactive electric energy (EQout)
	Total active energy (EPtotal), total reactive energy (EQtotal) and total apparent energy (EStotal)
Measurement range	Active: 0~4294967295kWh
	Reactive: 0~4294967295kvarh
	Apparent: 0~4294967295kVAh
Measurement accuracy	±2.5%
Harmonics measurement	
Fundamental wave measurement	Current: Ia, Ib, Ic
	Voltage: Uab, Ubc, Uca
Total harmonic distortion	
THD and Thd	THD: The total distortion rate of harmonics relative to fundamental waves
	ThD: The total distortion rate of harmonics relative to effective values
The amplitude spectrum of harmonics	The controller can display the FFT amplitude of 3-31 odd harmonics, in the unit of %.
Measurement accuracy of the control unit	±2%

TGW1N Series Air Circuit Breaker

9 Product Accessories

9.1 Shunt release

After the circuit breaker stores energy, the shunt excitation coil can disconnect the circuit breaker instantaneously under the specified power supply voltage, which can be achieved remotely;

9.1.1 1000/1600 frame

Rated control power supply voltage Us (V)	AC220/230/240 AC380/400/415	DC220、DC110
Action voltage (V)	(0.7~1.1)Us	
Power consumption	56VA	250W
Segment time (ms)	(50±10)ms	

9.1.2 2000-6300 frame

Rated control power supply voltage Us (V)	AC380/400、230/220	DC220	DC110
Action voltage (V)	(0.7~1.1)Us		
Power consumption	300VA	132W	70W
Segment time (ms)	30~50		

Note: The pulse mode with a pulse width of 1s must be available, otherwise the component may be burnt out.

9.2 Closing electromagnet

After the circuit breaker stores energy, the closed electromagnet can close the circuit breaker under the specified power supply voltage, which can be achieved remotely;

9.2.1 1000/1600 frame

Rated control power supply voltage Us (V)	AC220/230/240 AC380/400/415	DC220、DC110
Action voltage (V)	(0.85~1.1)Us	
Power consumption	56VA	250W

9.2.2 2000-6300 frame

Rated control power supply voltage Us (V)	AC380/400、230/220	DC220	DC110
Action voltage (V)	(0.85~1.1)Us		
Power consumption	300VA	132W	70W
Closing time (ms)	No more than 70ms		

Note: It is prohibited to work for long time to prevent damage. Especially in the automatic control system, the pulse mode with a pulse width of 1s must be available, otherwise the component may be burnt out.

TGW1N Series Air Circuit Breaker

9.3 Undervoltage release

Achieve the undervoltage protection function of the circuit breaker. The Undervoltage time-delay release can disconnect the circuit breaker after 0.5s, 1s, 1.5s, 3s, 5s and 7s.

- When the voltage is 35%-70% of the rated working voltage, the Undervoltage release shall make the circuit breaker trip reliably.
- When the voltage is 85%-110% of the rated working voltage, the Undervoltage release shall ensure to make the circuit breaker closed.
- When the voltage is below 35% of the rated working voltage, the Undervoltage release shall prevent the circuit breaker from closing.

9.3.1 1000/1600 frame

Rated working voltage Ue(V)	AC220/230/240、AC380/400/415
Action voltage (V)	(0.35~0.7)Ue
Reliable closing voltage (V)	(0.85~1.1)Ue
Reliable unclosing voltage (V)	≤0.35Ue
Power consumption	20VA

9.3.2 2000-6300 frame

Rated working voltage Ue(V)	AC380/400、230/220	DC220、DC110
Action voltage (V)	（0.35~0.7）Ue	（0.35~0.7）Ue
Reliable closing voltage (V)	（0.85~1.1）Ue	（0.85~1.1）Ue
Reliable unclosing voltage (V)	≤0.35Ue	≤0.35Ue
Power consumption	48VA	48W

Note: The Undervoltage releasemust be energized first in order to re-buckle and close the circuit breaker, otherwise it will damage the circuit breaker.

9.4 Electric motor operating mechanism

When the circuit breaker is powered on, it will automatically store energy; The energy can be stored with handle when it is powered off.

9.4.1 1000/1600 frame

Rated control power supply voltage Us (V)	AC220/230/240 AC380/400/415	DC220、DC110
Action voltage (V)	(0.85~1.1)Us	
Power consumption	90VA	90W
Stored-energy time	＜ 4s	
Operation frequency	≤ 3 minutes/time	

9.4.2 2000-6300 frame

Rated control power supply voltage Us (V)	AC380/400、230/220	DC220	DC110
Action voltage (V)	(0.85~1.1)Us		
Power consumption	85/110	85	110
Stored-energy time	≤ 5s		

Note: It shall not be powered on for a long time, to avoid damage.

TGW1N Series Air Circuit Breaker

9.5 Auxiliary contact

It can be used for monitoring the status of the circuit breaker, such as connecting with the position signal lamp and disconnecting indicator light of the circuit breaker.

- Standard type, 4NO+4NC by default (4 sets of transfer contacts)
- Special type, 3NO+3NC, 5 sets of transfer contact, 6 sets of transfer contact

1000/1600 frame

2000-6300 frame

Rated voltage (V)	Rated heating current Ith (A)	Rated control capacity
AC230	6	300VA
AC415	6	300VA
DC220	6	60W

9.6 Door frame and gasket

It is installed on the door of the distribution cabinet chamber for sealing, with the protection grade of IP40 (it is divided into drawer type and fixed type).

9.7 Dust cover

Fastened to the beam of the drawer seat to prevent any dust or other debris from falling into the secondary circuit terminal, leading to poor contact.

TGW1N Series Air Circuit Breaker

9.8 Phase partition

It is installed between phases of the terminal block, for increasing the interphase insulation capacity of the circuit breaker.

9.9 Grounding current transformer

It is a special external transformer for measuring neutral phase current when the ground mode is ground current return mode. It can protect the upper and lower ground faults of the circuit breaker at the same time.

9.10 External transformer of Phase N

It is an external transformer for measuring the neutral phase current under 3P+N grounding mode. It shall be sleeved on the busbar

1000/1600 frame

2000-6300 frame

TGW1N Series Air Circuit Breaker

9.11 Electric leakage transformer

It is a special external rectangular transformer under the electric leakage grounding protection.

9.12 Power supply module

It can provide a DC 24V power supply with the power not less than 9.6W. It can output 4 sets of wiring terminals. Both AC and DC inputs are available (AC/DC220V). It can be used as a relay module power supply.

9.13 Power supply module

The output signal unit of the controller is generally used for fault alarm or indication. When the load capacity generated when it is used for the closing and opening of the circuit breaker is large, the control should be conducted after it is converted through the relay module. Contact capacity is: AC250V,10A,DC28V,10A

TGW1N Series Air Circuit Breaker

9.14 Door interlock

The gate interlock mechanism is installed on the circuit breaker, which can avoid the opening of the small chamber gate when the drawer type circuit breaker is separated. The door interlock is generally installed on the right side of the circuit breaker.

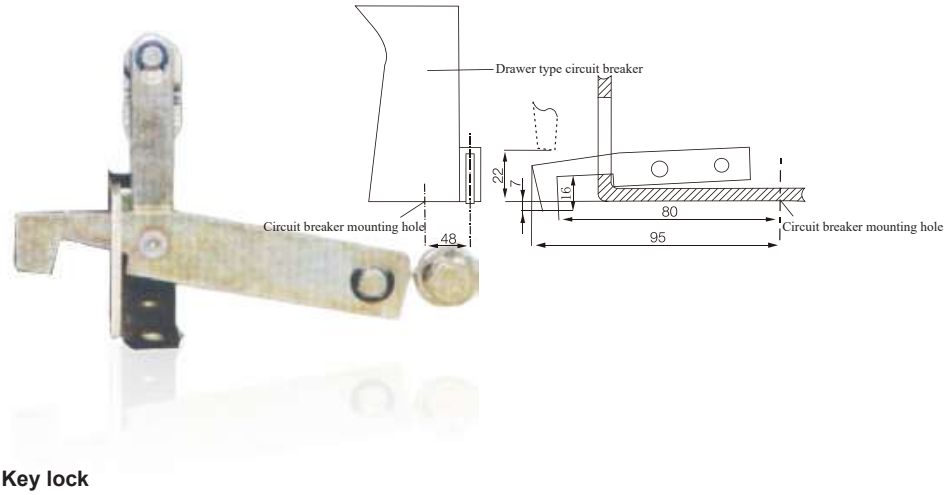

9.15 Key lock

The opening lock can lock the circuit breaker at the disconnection position. The circuit breaker can be closed only when the lock is opened with a key and the key is not pulled out.

- One key with one lock
- Two locks with one key
- Three locks with two keys
- Five locks with three keys

9.16 Three-position lock

It is in the drawer type circuit breaker and is used for breaking the “connection”, “test” and “separation” positions of the circuit breaker. The three positions of the circuit breaker shall be indicated by the indicator. The handle is locked in the exact position. The locking can be released through the reset button.

TGW1N Series Air Circuit Breaker

9.17 Reclosing Function Introduction

9.17.1 Operation panel

Turn the rocker switch on the panel to the “Auto” position to allow the automatic reclosing operation; the auto reclosing operation is not allowed when at the “Manual” position.

Indication diagram shown below:

Auto reclosing is only suitable for fault caused by undervoltage or overload, and there is no magnetic flow. The opening action can be conducted by the shunt coil (the contacts of one circuit shall be controlled) or the undervoltage release. The auto reclosing is not allowed for the opening operation caused by magnetic flow.

9.17.2 Undervoltage reclosing function

The undervoltage reclosing function can be used in the power grid in the area where there area where the thunder and lightning occur frequently and where the power supply is unstable to prevent the circuit breaker from trip due to voltage reduction for short time for protection due to abnormal line voltage.

9.17.2.1 Parameters setting

- Press the “Set” key to enter the “Undervoltage” submenu under the “Voltage protection” menu; firs set the execution mode = “reclosing”, and then set the start value, start time, return value, and return time. The set values are as follows:

Execution mode ↓ =reclosing Start value =280V	Start time ↕ = 0,0s Return value =320V	Return time ↑ = 3,0s

When the measured line voltage is below the start value 280V that is an operating voltage, the controller will issue an opening signal instantly after 0.0s to make the shunt coil or undervoltage release work; when the voltage recovers to the return value 320V, the controller will issue a pulse signal to the closing coil after 3.0s to activate it to conduct the automatic reclosing operation.

9.17.2.2 Port setting

- Press the “Query” key to enter the “Function setting” submenu under the “I/O setting” menu, and conduct the following settings:

Function setting = D03 = OFF	Function setting = D04 = ON

- Press the “Query” key to enter the “Execution mode” submenu under the “I/O setting” menu, and conduct the following settings:

Execution mode = D03 = Normally open pulse = 1s	Execution mode = D04 = Normally open pulse = 1s

9.17.2.3 Fault records

In the event of an undervoltage fault, the controller will pop up the following interface:

Undervoltage opening ↓ T = 0,01s Umin = 0V	F = 0,00Hz ↑ Uab = 0V Ubc = 0V Uca = 0V

If the voltage recovers to the normal value, and closing is conducted successfully, return to the power-on interface.

After the controller is powered off, and the last fault is caused by undervoltage to turn the rocker switch to the "Reclosing auto" state, the following interface will pop up automatically after power-on:

Undervoltage opening ↓ T = 0,01s Umin = 0V	F = 0,00Hz ↑ Uab = 0V Ubc = 0V Uca = 0V

The undervoltage opening record can be inquired in the trip record, and the display contents are shown below:

Undervoltage opening ↓ T = 0,01s Umin = 0V	F = 0,00Hz ↑ Uab = 0V Ubc = 0V Uca = 0V

The undervoltage automatic closing record is only inquired in the trip records with an interface not popped up, and the display contents are shown below:

Undervoltage closing ↓ T = 0,01s Umin = 384V 09:02:05 1/25	F = 49,99Hz ↑ Uab = 384V Ubc = 380V Uca = 382V

9.17.3 Overload reclosing function

9.17.3.1 Parameters setting

- Press the "Set key" twice to enter the "Long delay" submenu under the "Current protection" menu; first set the execution mode = "Reclosing", and then set the operating current, curve type, delay time, cooling time, reclosing current and reclosing time, such as:

Execution mode ↓ = Reclosing Operating current = 2000A = 100,0%In	Curve type ↕ = I^2t Delay time = C3, 60s@1,5Ir	Cooling time ↑ =Instant reclosing time = 10s

TGW1N Series Air Circuit Breaker

Overload opening operation characteristics

Characteristic	Current multiple (I/Ir)	Appointed opening time	Allowed delay error
Non-operating characteristic	<1.05	No operate >2h	±10%
Operating characteristic	>1.2	Operated <1h	
Operation delay	≥1.2		

Overload reclosing operation characteristics

Characteristic	Reclosing time	Appointed closing time	Allowed delay error
Non-return characteristic	<	Non-closing	±10%
Return characteristic	>=	Closing, definite time characteristic equals to the set delay time	

- ●If the "IO setting" of the undervoltage reclosing is modified, the IO function setting and execution mode of the overload reclosing are consistent with those of the undervoltage reclosing. If not, please set it according to the above undervoltage reclosing setting mode.

9.17.3.2 View fault record

The following interface will pop up in the event of an overload fault. If the fault is eliminated and the closing is conducted successfully, return to the power-on operation interface. After the controller is powered off, if the last fault is caused by the overload, the following interface will pop up automatically after power-on.

The automatic closing record can be inquired without popping up the interface.

Overload opening ↓	Ia = 4746A ↑
T = 24,12s	Ib = 0A
T = 4746A	Ic = 0A
	In = 0A

9.17.3.3 Advanced setting

In order to improve the safety of the product, the overload reclosing times and time window length are limited. The specific operations are as follows:

When the controller is in the Reset state, with the "▲", "▼" and "Confirm" keys pressed, the window will display "0000"; press the "Confirm" key, and enter the advanced password "0001"; press the "Confirm" key, and then press the "▼" key to move the frame to the "Advanced setting" interface; press the "Confirm" key again to move the frame to the "Time window length" and "Reclosing (closing) times" menus for setting. Press the "Confirm" key to save. Press the "Exit" to cancel modification.

Note: For the opening of the controller due to overload fault within the default 10 minutes, the reclosing operation can be conducted three times; it is recommended not conduct any change by users.

TGW1N Series Air Circuit Breaker

10 Mechanical Accessories

10.1 Interlock mechanism

The mechanical interlock mechanism is installed on the right-side plate of circuit breaker;

When any circuit breaker is closed, then none of other circuit breakers can be closed;

The interlock mechanism and the interlocking that can be used for both drawer type circuit breakers and the fixed circuit breakers;

The interlock mechanism is installed by the user;

The distance between the circuit breaker using cable interlock and the circuit breaker shall not be more than 2m;

The distance between the circuit breaker using hard lever interlock and the circuit breaker is 0.9m;

When using the cable interlock, the minimum corner radius of the cable interlock shall not be less than R120mm.

Mechanical interlock type that can be provided

Interlocking pattern	Between two circuit breakers		Among three circuit breakers	
	Horizontal	Vertical	Horizontal	Vertical
Cable interlock	√	√	√	√
Hard lever interlock	×	√	×	×

10.2 Typical application of the interlocking device

10.2.1 Interlock between two circuit breakers

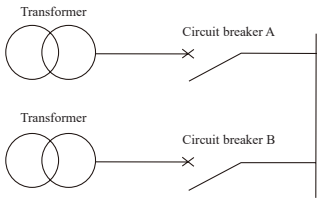

Emergency power supply (circuit breaker B)	Normal power supply (circuit breaker A)
0	0
0	1
1	0
1 represents circuit breaker closing; 0 represents circuit breaker disconnection	

10.2.2 Interlock among three circuit breakers (only one circuit breaker can be closed)

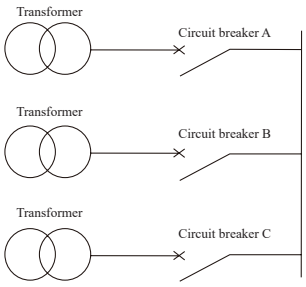

Emergency power supply (circuit breaker)	Emergency power supply (circuit breaker)	Normal power supply (circuit breaker)
0	0	0
0	0	1
0	1	0
1	0	0
1 represents circuit breaker closing; 0 represents circuit breaker disconnection		

TGW1N Series Air Circuit Breaker

10.3 Schematic diagram of cable connection between two circuit breakers

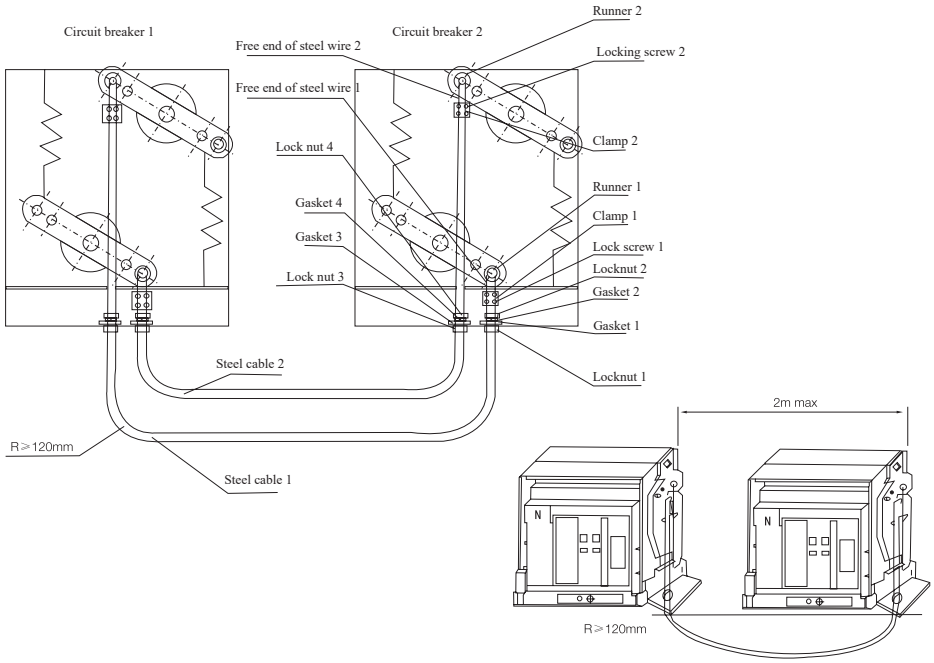

10.4 Connection diagram for hard lever interlock between two circuit breakers

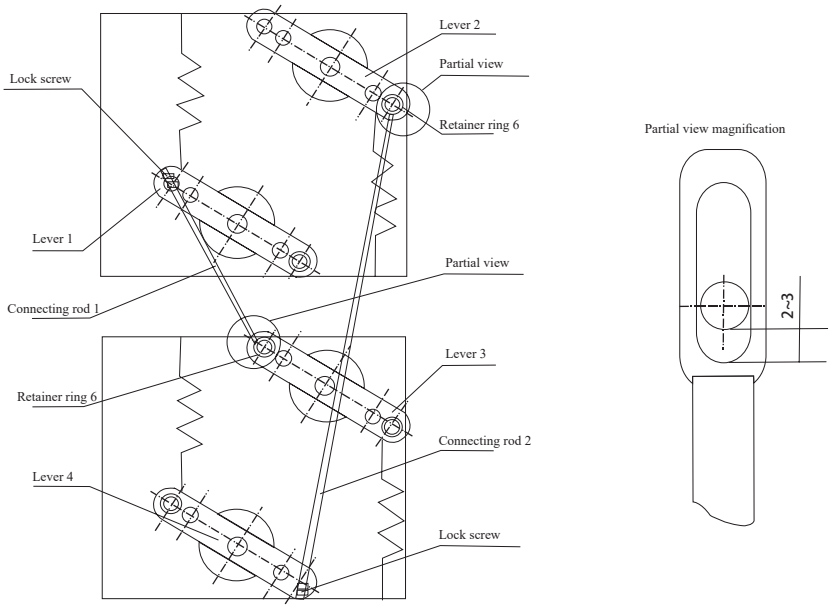

TGW1N Series Air Circuit Breaker

10.5 Cable interlock among three circuit breakers

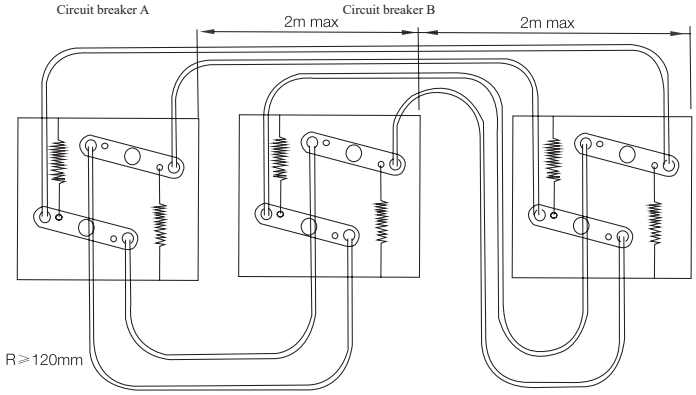

Key lock

The breaking button of the circuit breaker can be locked at the down position. At the same time, the circuit breaker cannot close.

If the user selects it, the manufacturer will provide a lock and key.

If the user buys the key lock separately. During installation, a hole saw is required.

Tap a hole, with the diameter of φ28mm. The hole saw shall be prepared by the user.

Note: After the circuit breaker is locked with a key lock, it cannot be closed manually or electrically.

a. One key with one lock: A circuit breaker is equipped with an independent lock and a key.

Circuit diagram

Possible modes of operation

QF
0
1

b. Two locks with one key: Two circuit breakers are equipped with 2 same locks and 1 key.

Circuit diagram

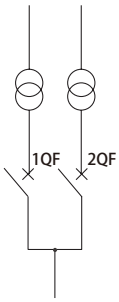

Possible modes of operation

1QF	2QF
0	0
0	1
1	0

c. Three locks with two keys: Three circuit breakers are equipped with 3 same locks and 2 same keys.

Circuit diagram

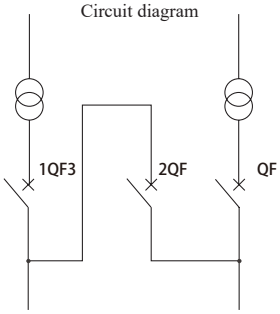

Possible modes of operation

1QF	2QF	3QF
0	0	0
0	0	1
0	1	1
1	0	0
1	1	0
1	0	1

d. Three locks with one key: Two circuit breakers are equipped with 3 same locks and 1 key.

Circuit diagram

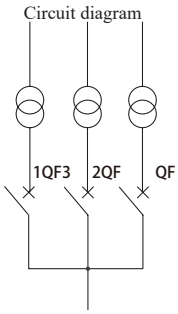

Possible modes of operation

1QF	2QF	3QF
0	0	0
0	0	1
0	1	0
1	0	0

Attention: For a Air Circuit Breaker with a key interlock, when the key needs to be pulled out, press the opening button firstly, turn the key counterclockwise and pull it out.

TGW1N Series Air Circuit Breaker

11 Outline and Installation Dimensions

11.1 TGW1N-1000/1600 intelligent Air Circuit Breaker (drawer type)

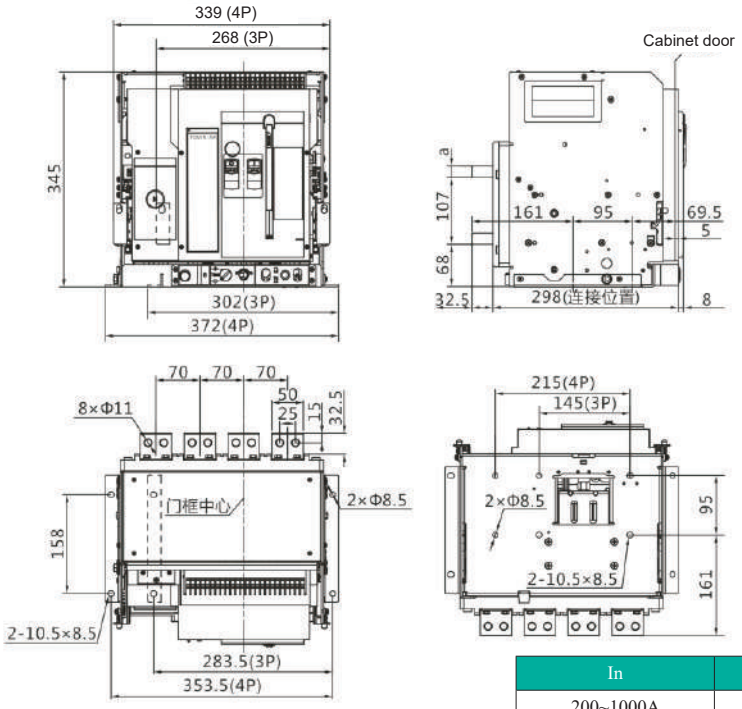

In	a (mm)
200~1000A	10
1250~1600A	18

11.2 TGW1N-1000/1600 intelligent Air Circuit Breaker (fixed)

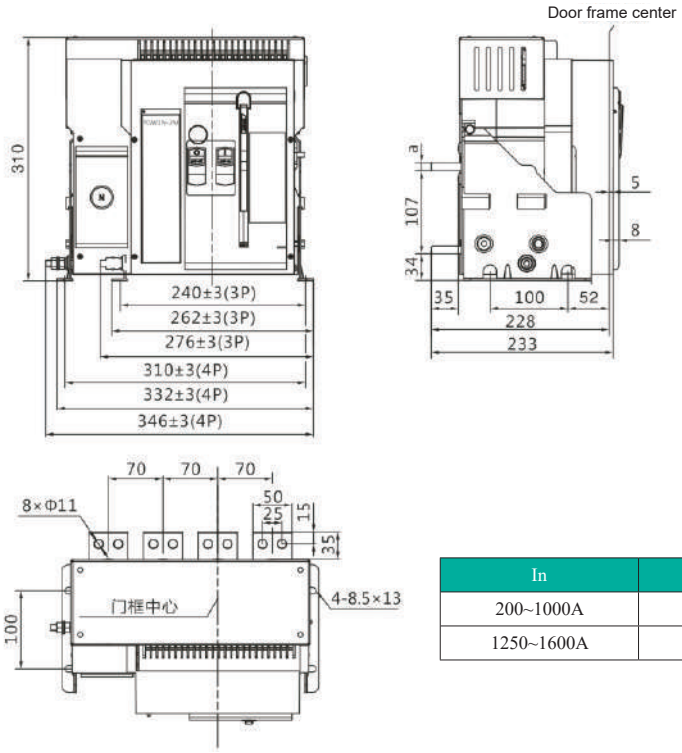

In	a (mm)
200~1000A	10
1250~1600A	18

TGW1N Series Air Circuit Breaker

11.3 Hole sizes of TGW1N-1000/1600 panel

Hole size of door frame

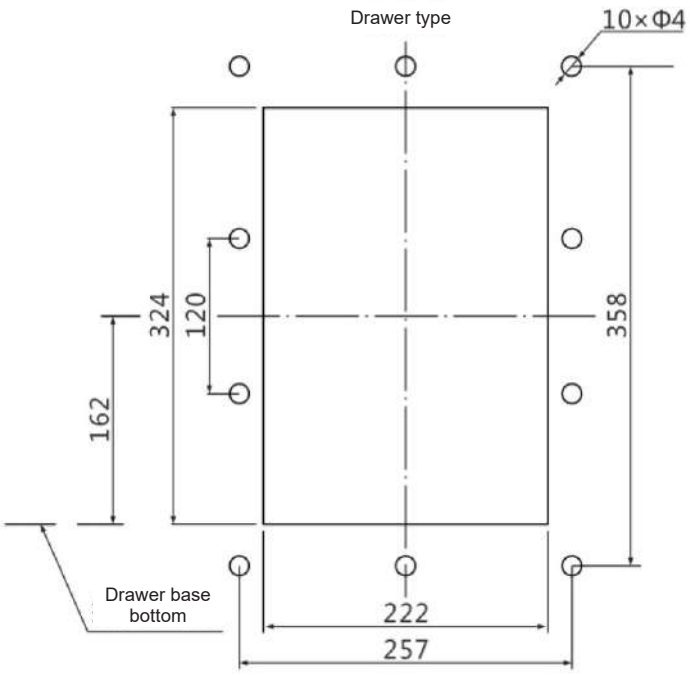

Hole size of door frame

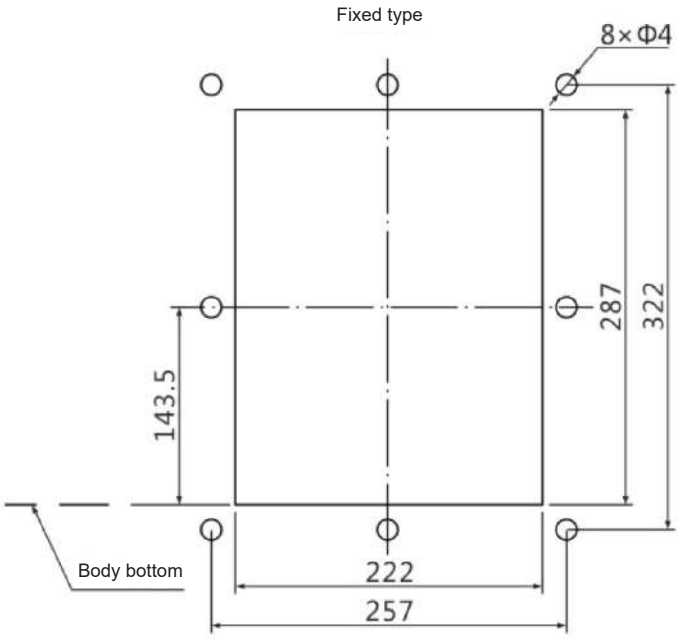

TGW1N Series Air Circuit Breaker

11.4 TGW1N-2000/TGW1N-2000H fixed type circuit breaker

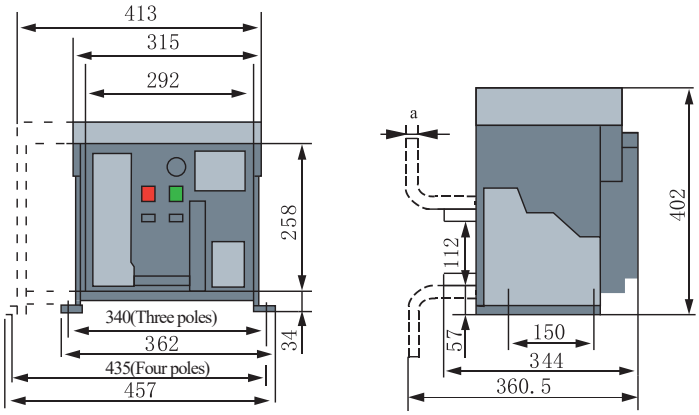

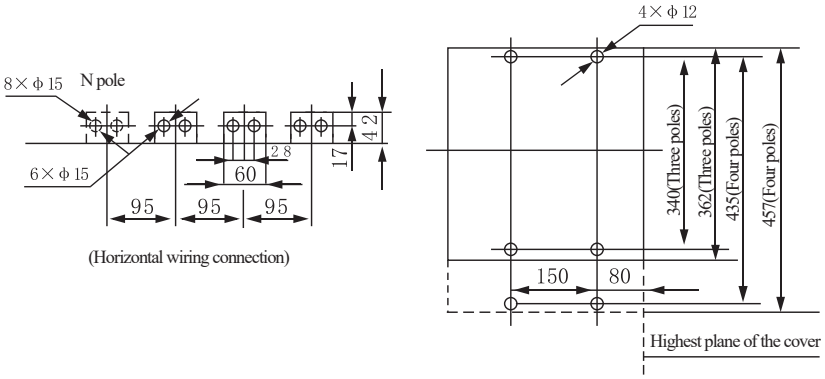

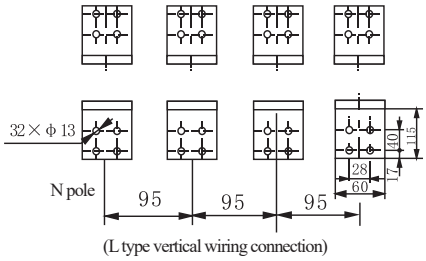

In	200-630A	800-1600A	1900-2000A
a	10	15	20

TGW1N Series Air Circuit Breaker

11.5 TGW1N-2000/TGW1N-2000H drawer type circuit breaker

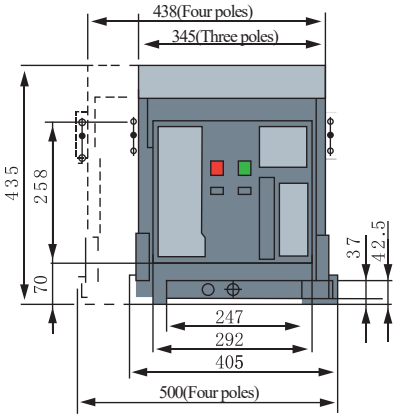

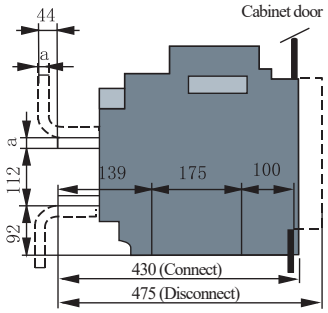

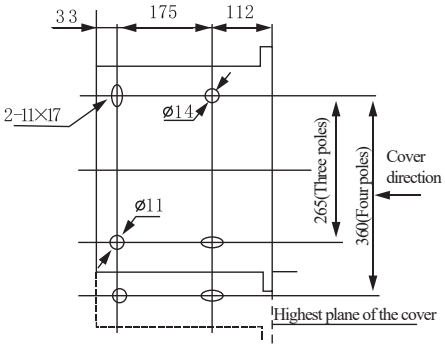

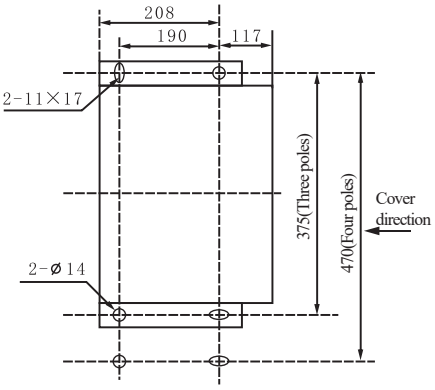

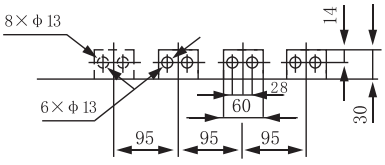

(Horizontal wiring connection)

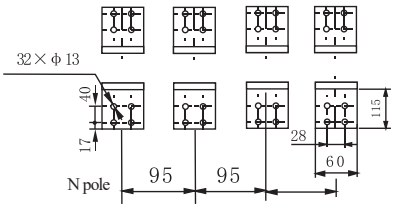

(L type vertical wiring connection)

In	200-630A	800-1600A	1900-2000A
a	10	15	20

TGW1N Series Air Circuit Breaker

11.6 TGW1N-2500/TGW1N-2500H fixed type circuit breaker

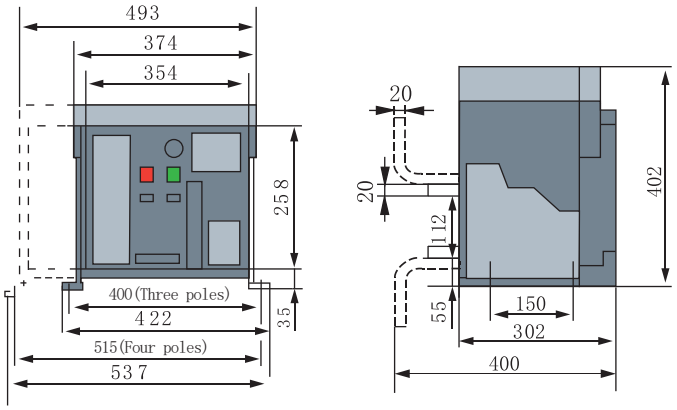

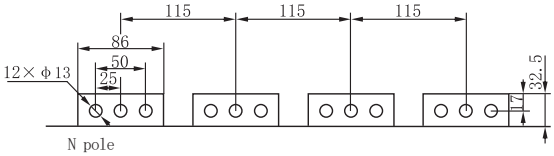

(Horizontal short busbar, default setting)

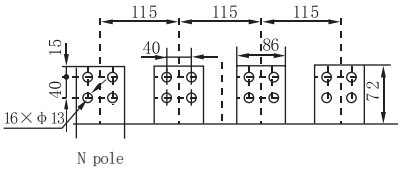

(Horizontal long busbar)

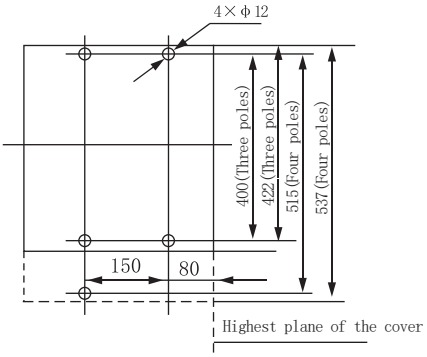

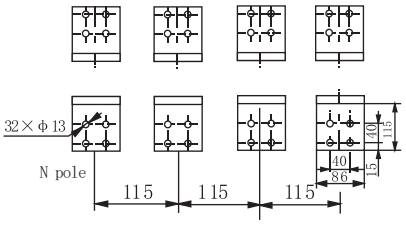

(L type vertical wiring connection)

TGW1N Series Air Circuit Breaker

11.7 TGW1N-2500/TGW1N-2500H drawer type circuit breaker

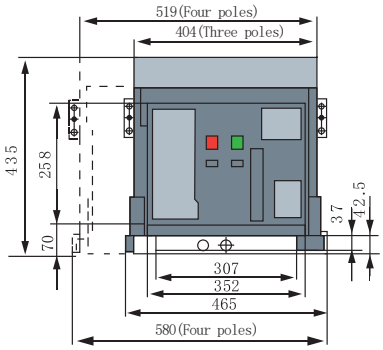

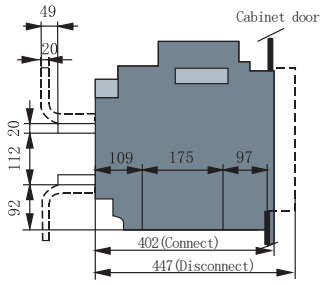

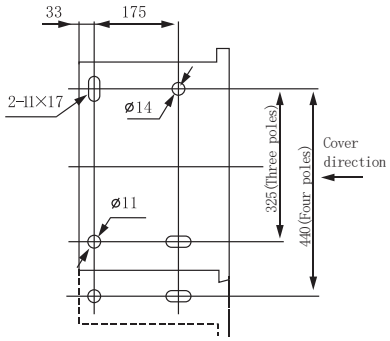

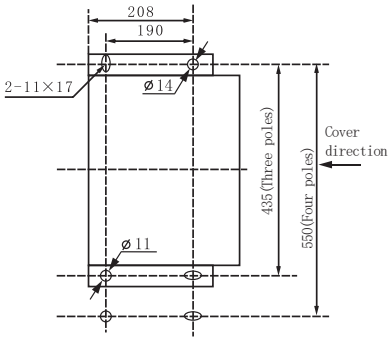

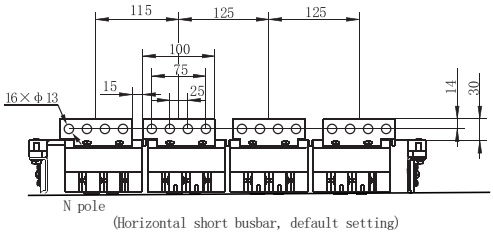

(Horizontal short busbar, default setting)

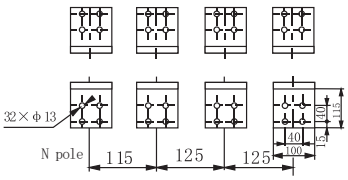

(L type vertical wiring connection)

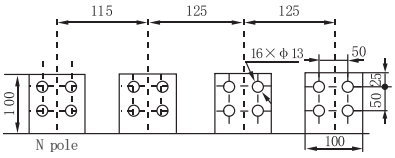

(Horizontal long busbar)

TGW1N Series Air Circuit Breaker

11.8 TGW1N-3200/TGW1N-3200H fixed type circuit breaker

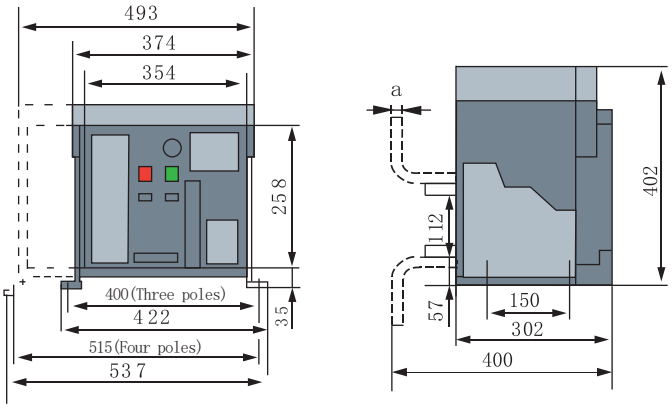

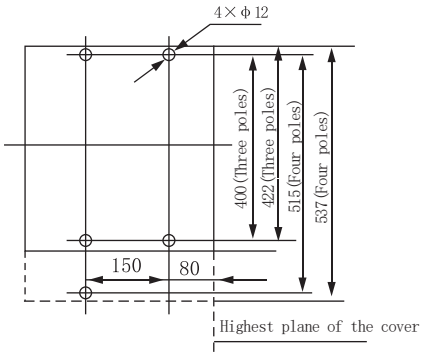

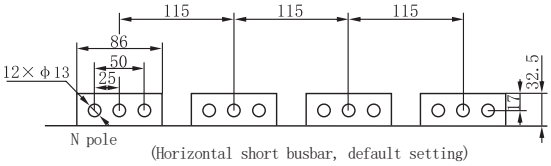

(Horizontal short busbar, default setting)

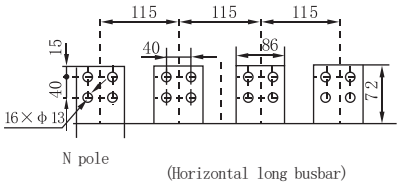

(Horizontal long busbar)

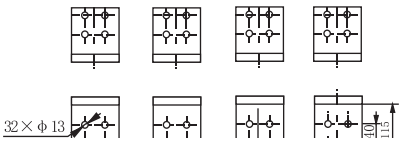

In	2000A、2500A	2900A、3200A
a	20	30

TGW1N Series Air Circuit Breaker

11.9 TGW1N-3200/TGW1N-3200H drawer type circuit breaker

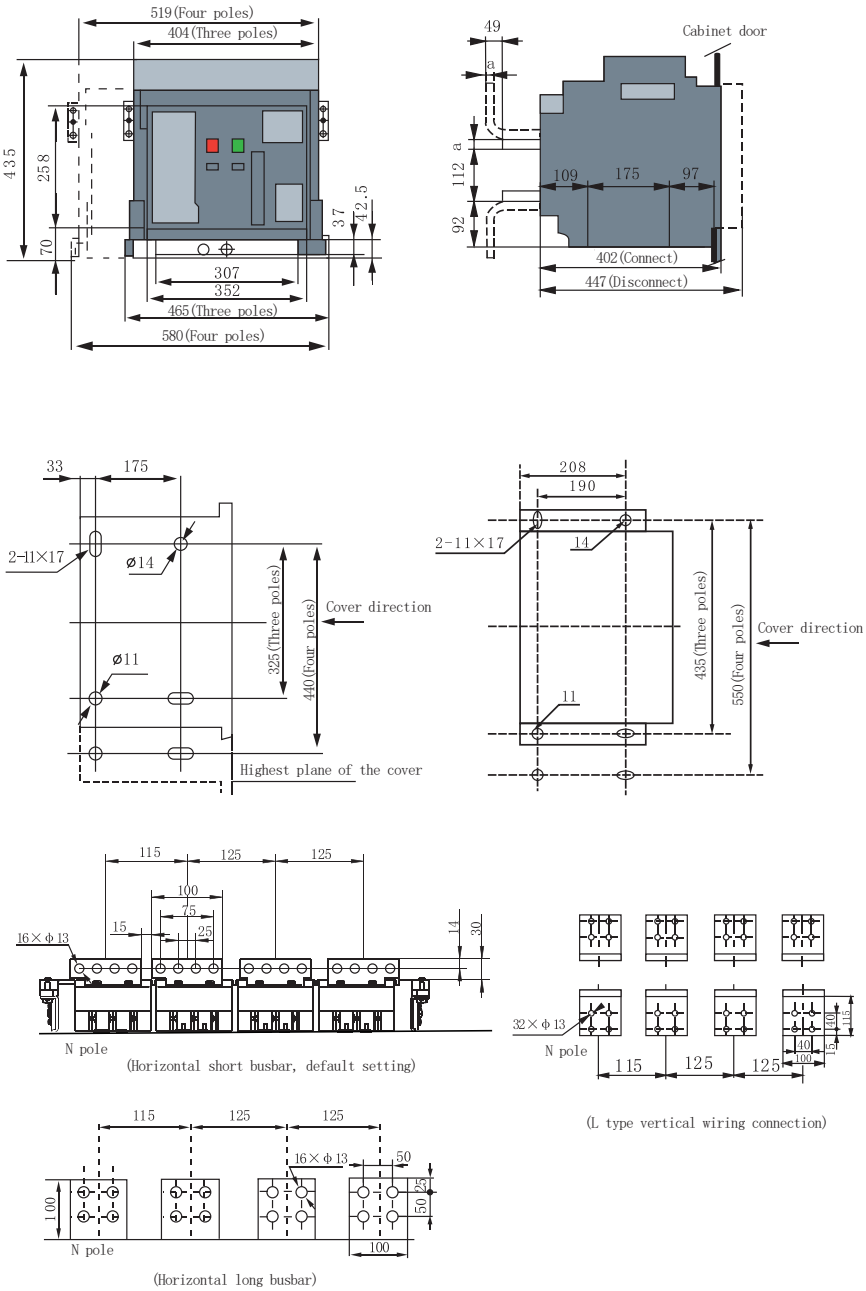

In	2000A、2500A	2900A、3150A、3200A
a	20	30

TGW1N Series Air Circuit Breaker

11.10 Outline dimension and installation dimension drawing of TGW1N-4000(In=2500-3200A) fixed circuit breaker

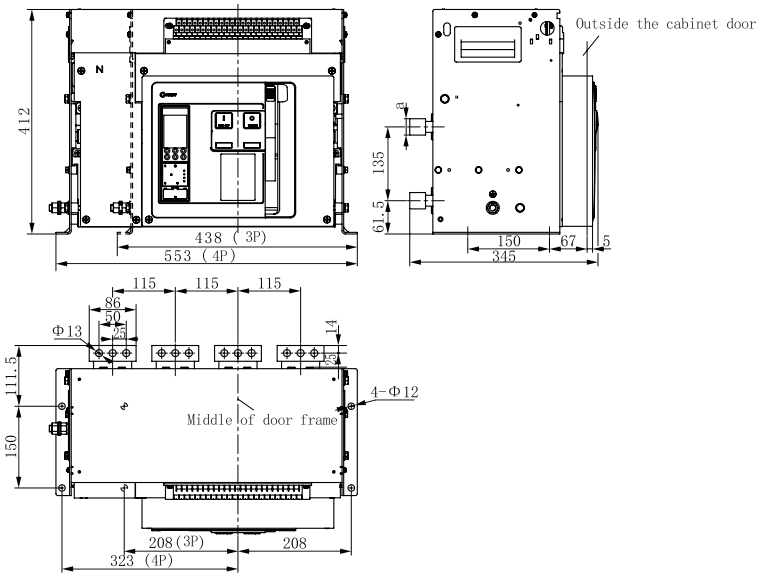

In	2500A	2900A、3200A
a	20	30

11.11 Outline dimension and installation dimension drawing of TGW1N-4000(In=2500-3200A) drawer type circuit breaker

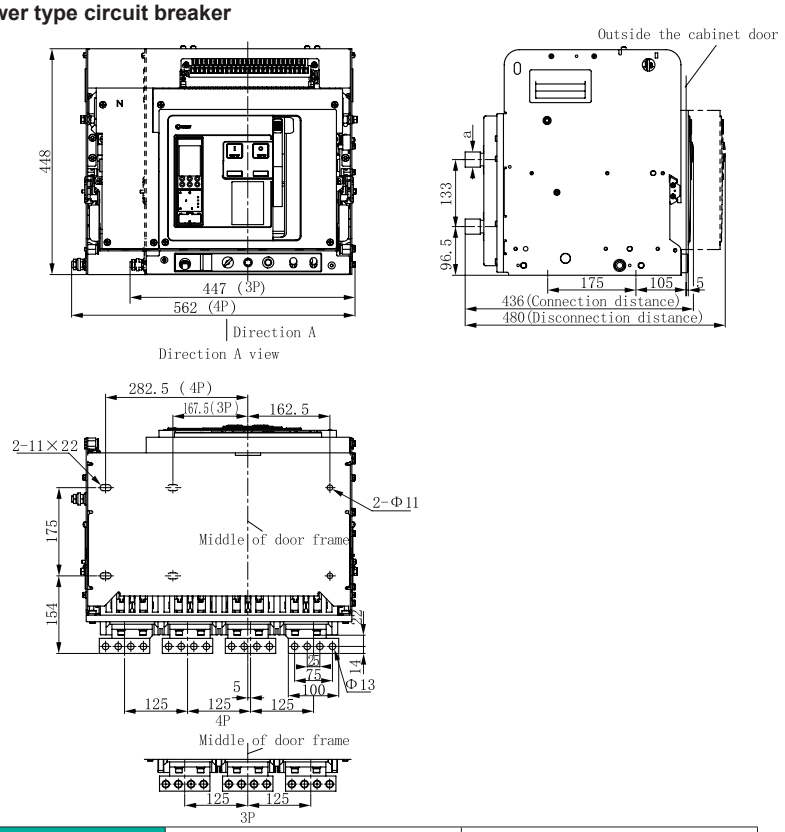

In	2500A	2900A、3200A
a	20	30

TGW1N Series Air Circuit Breaker

11.12 Outline dimension and installation dimension drawing of TGW1N-4000 (In=3600-4000A) fixed circuit breaker

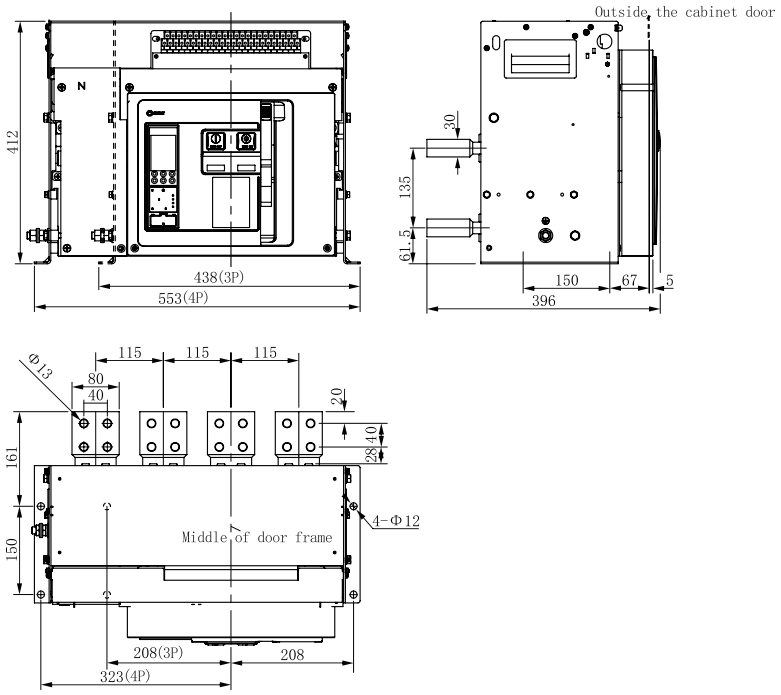

11.13 Outline dimension and installation dimension drawing of TGW1N-4000(In=3600-4000A) drawer type circuit breaker

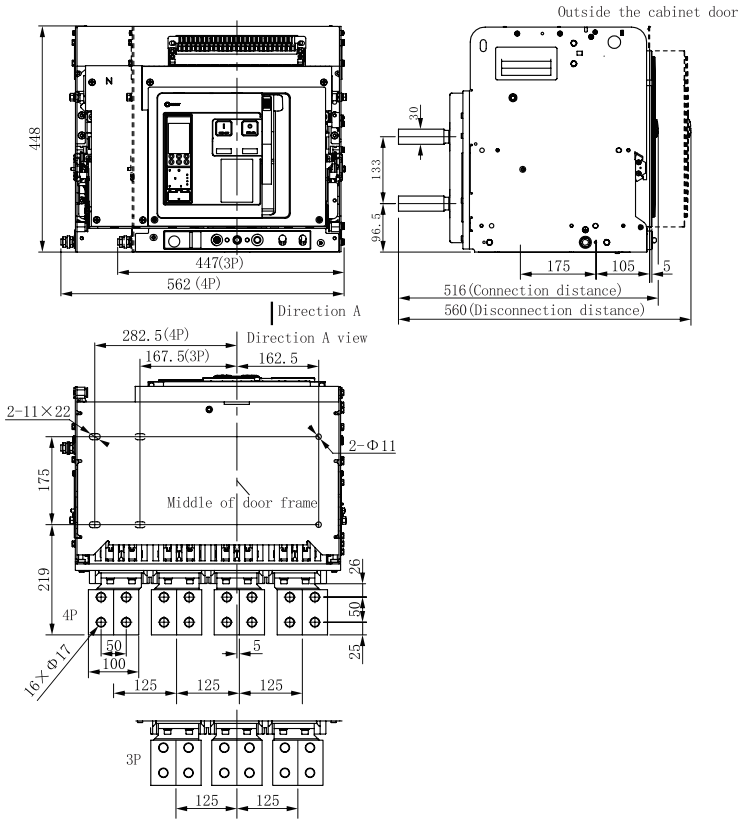

TGW1N Series Air Circuit Breaker

11.14 Outline dimension and installation dimension drawing of TGW1N-6300 fixed circuit breaker

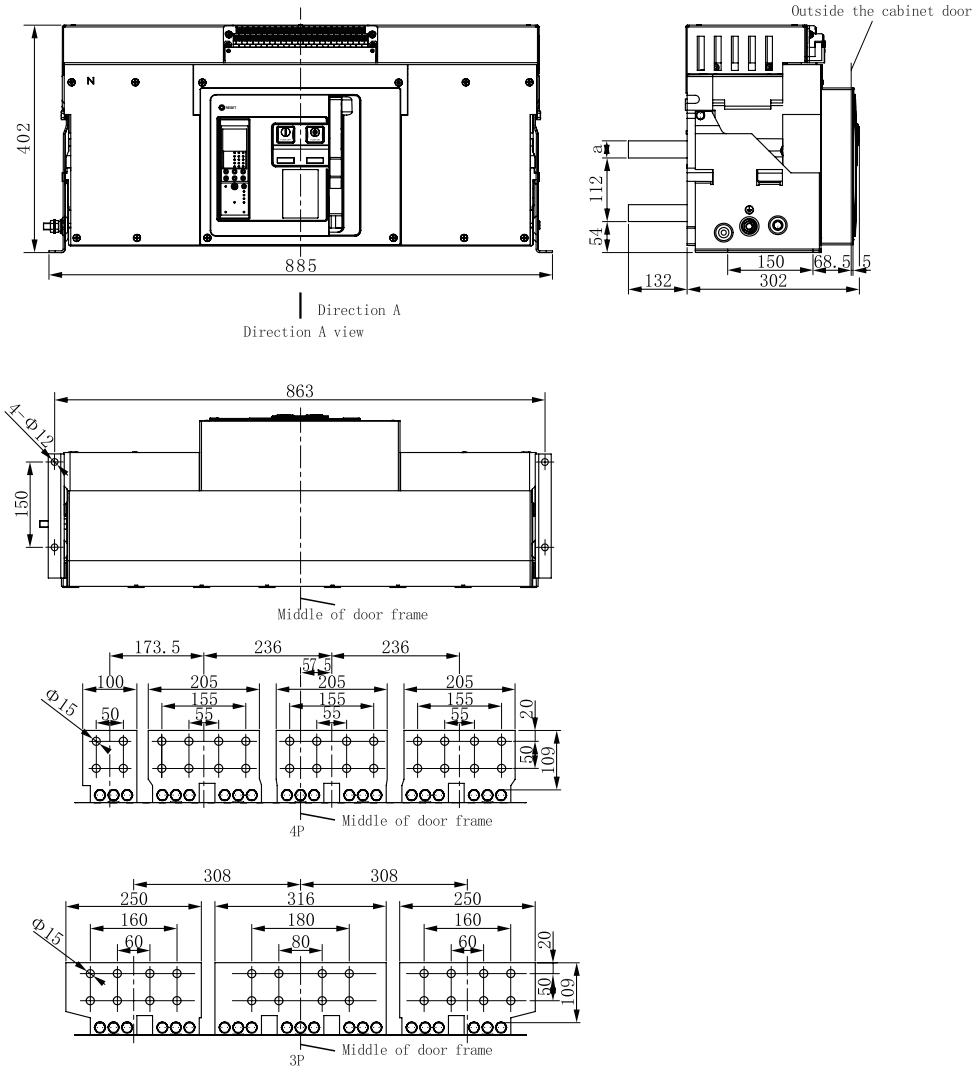

In	4000A	4900A, 5000A, 5900A, 6300A
a	20	30

TGW1N Series Air Circuit Breaker

11.15 Outline dimension and installation dimension drawing of TGW1N-6300 drawer type circuit breaker

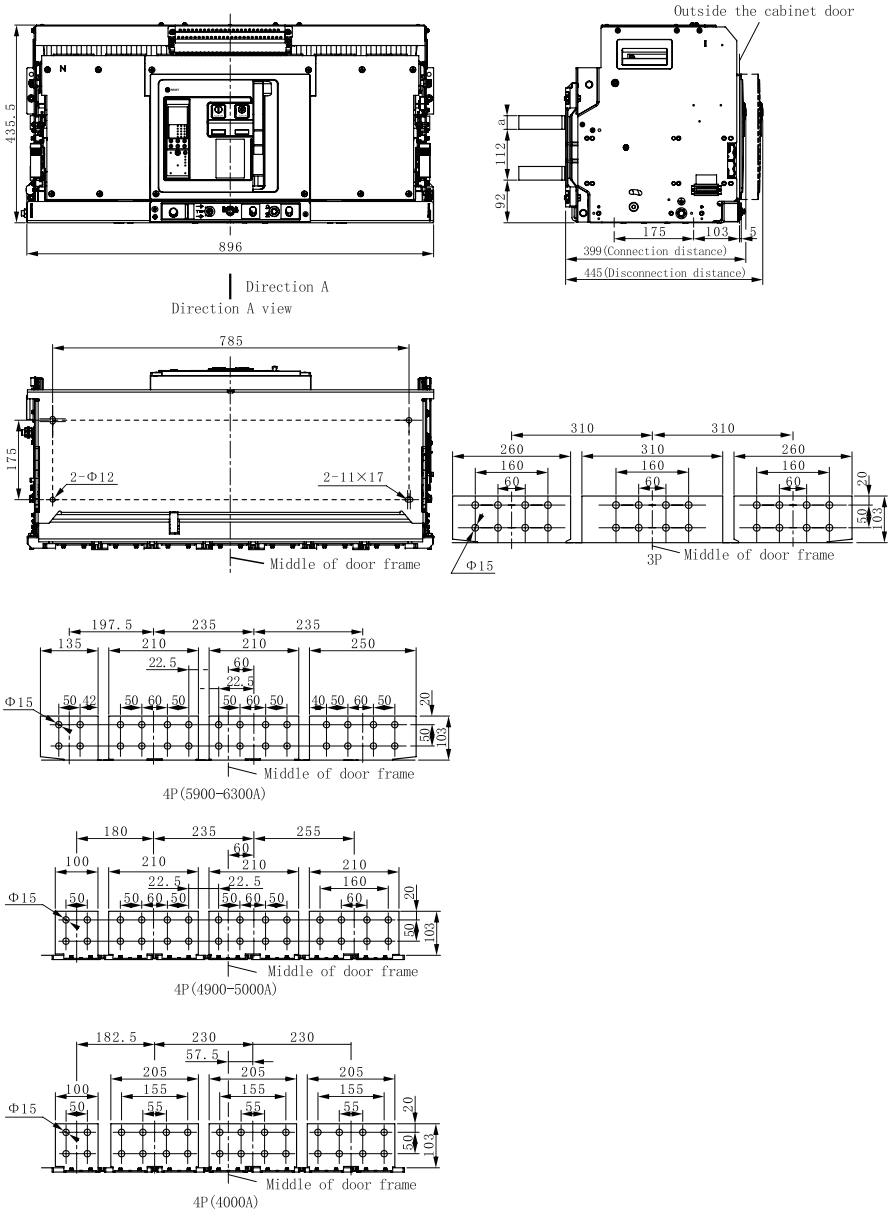

In	4000A	4900A, 5000A, 5900A, 6300A
a	20	30

TGW1N Series Air Circuit Breaker

11.16 Hole sizes of TGW1N-2000-6300 panel

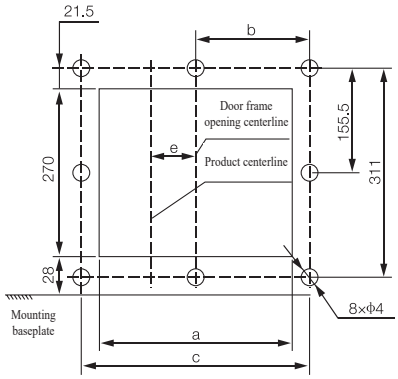

Fixed

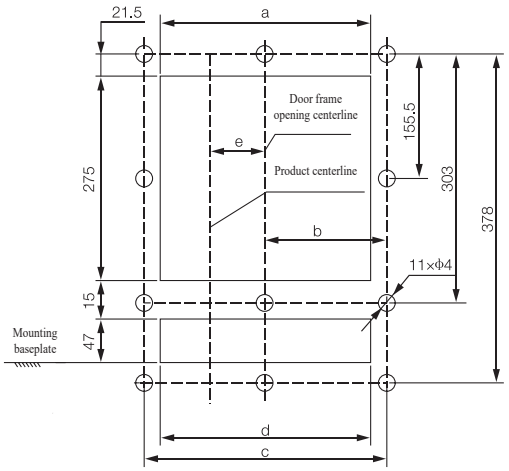

Drawer-type

In	a	b	c	d	e (3 poles)	e (4 poles)
2000	306	172.5	345	263	0	47.5
2500/3200	366	202.5	405	323	0	57.5
4000	366	202.5	405	323	0	57.5
6300	366	202.5	405	323	0	
					0	

TGW1N Series Air Circuit Breaker

12 Installation Dimensions of External Transformer

12.1 ZCT1 current residual transformer

It is a special external rectangular transformer under the current residual (E) grounding protection. The installation dimensions are shown in the following figure.

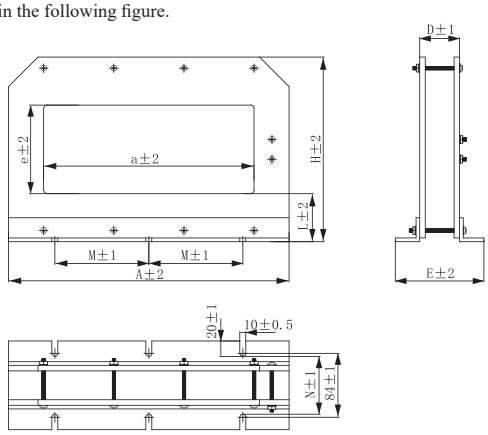

12.2 ZT100 grounding transformer

It is a special external transformer when the ground mode is ground current return mode (W). The installation dimensions are shown in the following figure.

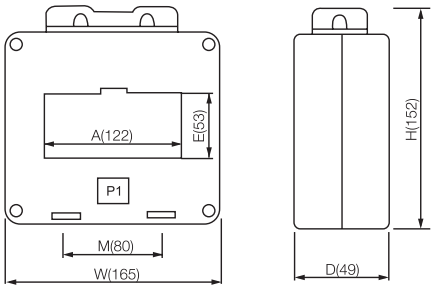

12.3 External transformer of Phase N

When 3P+N grounding is adopted, the installation and outline dimension of the neutral pole transformer or ground current transformer is as follows.

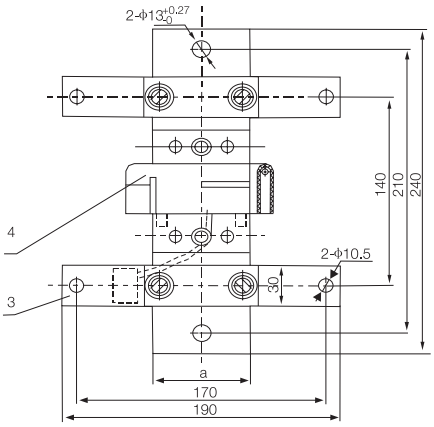

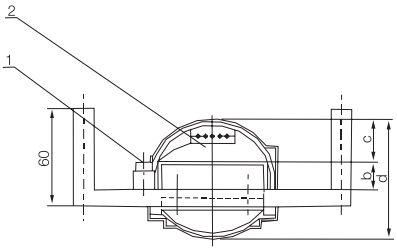

1- Earth plate 2- Busbar
3- Retaining plate 4- Transformer

In(A)	a	b	c	d
2000	60	12.5	34	φ89
2500, 3200, 4000	80	20	35	φ109.5

TGW1N Series Air Circuit Breaker

13 Installation Dimensions of the Power Supply Module and Panel

The module is installed with 25mm standard guide rail or fixed directly. The outline and installation dimensions are as follows:

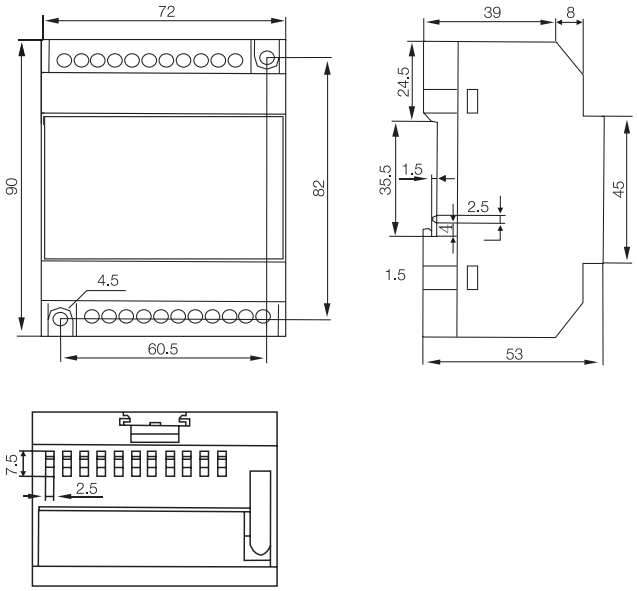

TGW1N Series Air Circuit Breaker

14 Electrical Schematic Diagram

14.1 48 circuit wiring diagram of TGW1N-1000/1600 circuit breaker with (M, 3M) controller

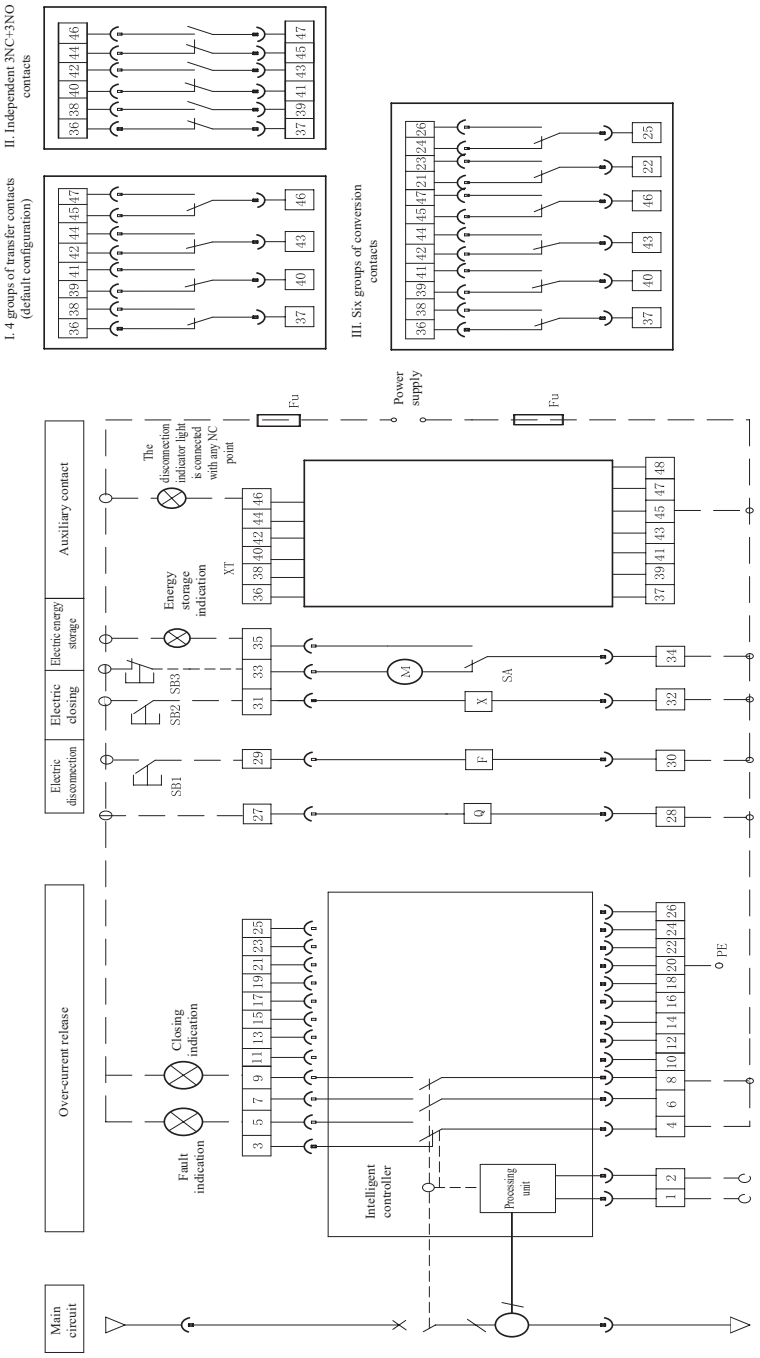

1, 2: Aux. power input
3, 4, 5: 4# line at the fault trip contact output terminal is common terminal
6, 7: First set of aux. contact output terminal of circuit breaker state
8, 9: Second set of aux. contact output terminal of circuit breaker state
10, 11: Empty
12, 13: First set of single contact output terminal
14, 15: Second set of single contact output terminal
16, 17: Third set of single contact output terminal
18, 19: Fourth set of single contact output terminal
12~19: When with the contact output function
20: Protective earth wire
21: N phase voltage input terminal
22: A phase voltage input terminal
23: B phase voltage input terminal
24: C phase voltage input terminal
25, 26: External transformer input terminal (empty if without external transformer)
21~24: When with voltage measurement function
SB1 Open button
SB2 Closed button
SB3 Electric energy storage button
SA Motor travel switch
M Energy storge motor
XT Terminal block
Q Undervoltage (instantaneous or delay) release
F Shunt release
X Closing electromagnet
FU Fuse (provided by user)
Those marked with dotted line are connected by user

Note: The terminal 35# can be connected to the power supply only after connecting an indicator in series, otherwise this may cause damage to the micro switch in the motor.

TGW1N Series Air Circuit Breaker

14.2 48 circuit wiring diagram of TGW1N-1000/1600 circuit breaker with (2H,3H) controller

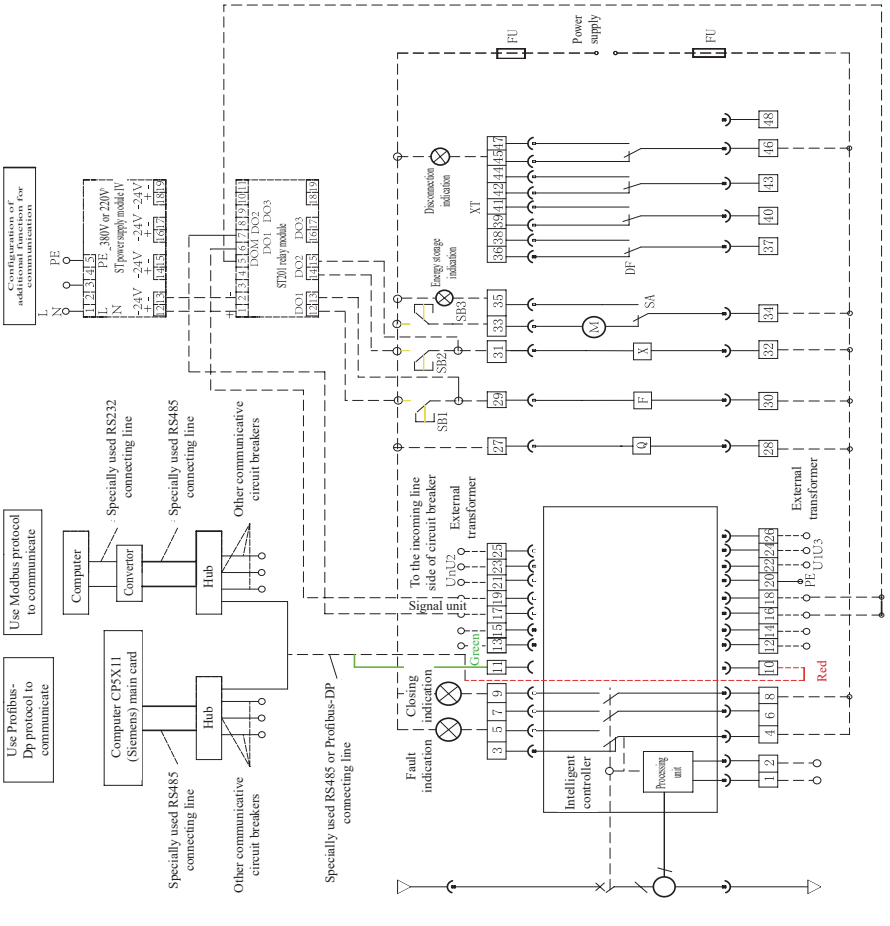

1, 2: Auxiliary power supply input
3, 4, 5: Output terminal of fault tripping contact, in which, line 4 is the common terminal
6, 7: Output terminal of the first group of auxiliary contacts of the circuit breaker status
8, 9: Output end of the second group of auxiliary contacts of the circuit breaker status
10, 11: Communication interface output terminal
12, 13: Output terminal of the first group of signal contact
14, 15: Output terminal of the second group of signal contact
16, 17: Output terminal of the third group of signal contact
18, 19: Output terminal of the fourth group of signal contact
20: Protect grounding line
21: Phase N voltage input terminal
22: Phase A voltage input terminal
23: Phase B voltage input terminal
24: Phase C voltage input terminal
25, 26: Input terminal of the external transformer (It is blank when there is no external transformer)
SB1 Opening button
SB2 Closing button
SB3 Electric energy storage button
SA Motor limit switch
M Energy storage motor
XT Wiring terminal
Q Undervoltage (instantaneous or time-delay) release
F Shunt release
X Closing electromagnet
FU Fuse (prepared by users)
The dotted line section will be connected by the users themselves
Note: Terminal 354 must be powered on after being connected with an indicator light in series; otherwise, it will cause damage to the microswitch in the motor.

TGW1N Series Air Circuit Breaker

14.3 47 circuit wiring diagram of TGW1N-2000-6300 circuit breaker with (M, 3M) controller (48 circuit for the drawer type, 48# is empty)

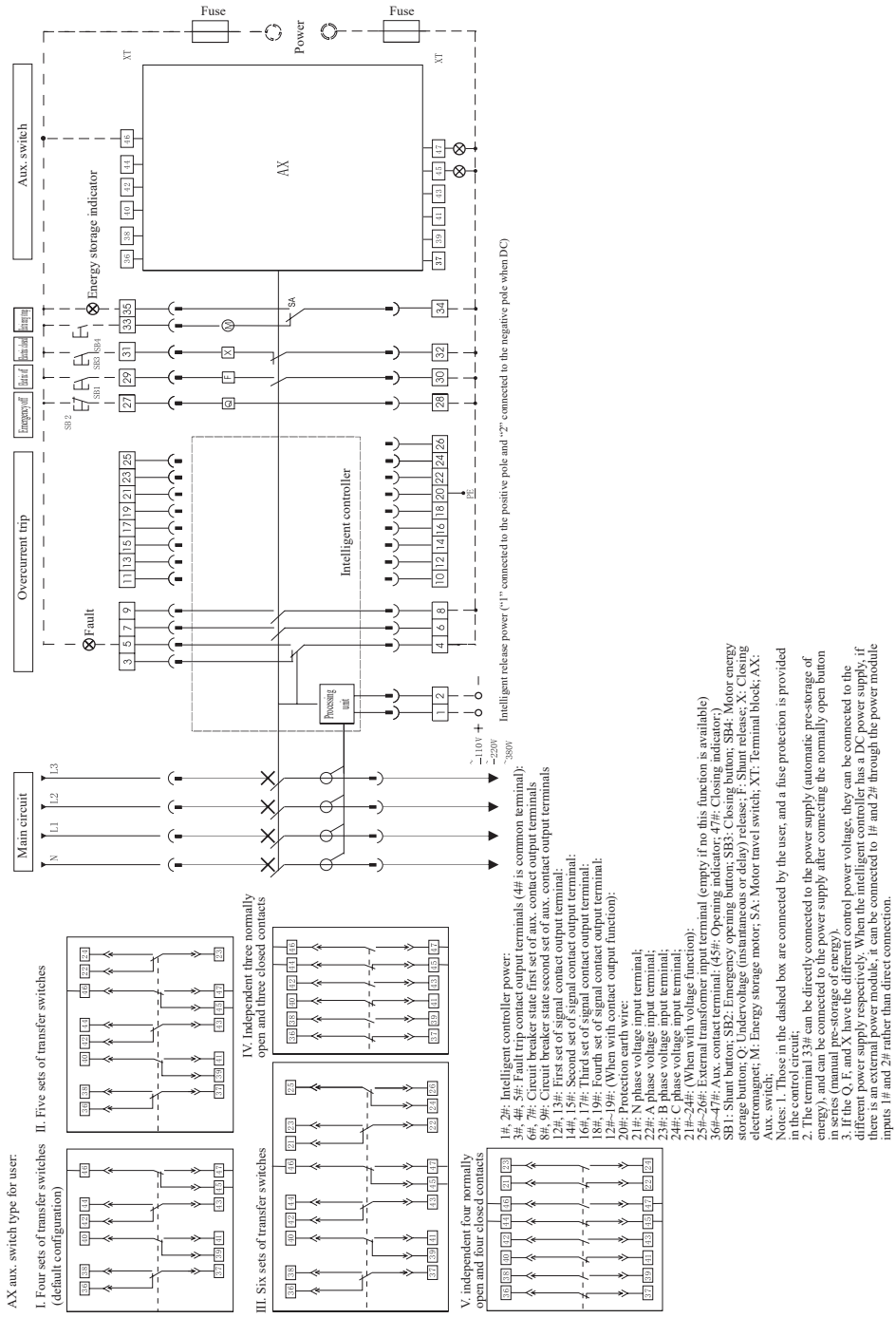

TGW1N Series Air Circuit Breaker

14.4 51 circuit wiring diagram of TGW1N-2000-6300 circuit breaker with (M, 3M) controller (52 circuit for the drawer type, 52# is empty)

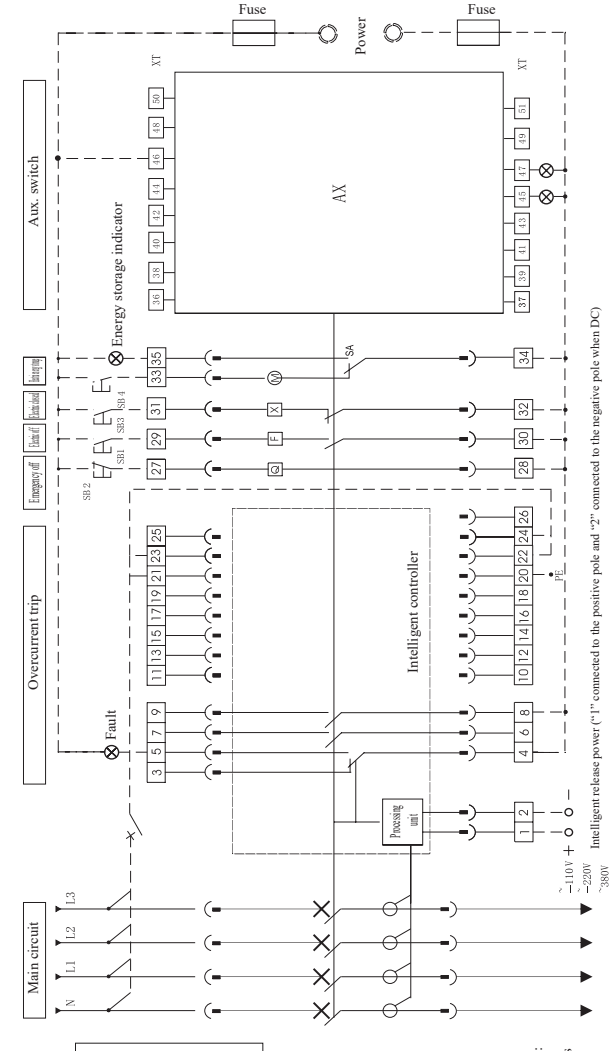

AX aux. switch type for user:

I. Four sets of transfer switches (default configuration)

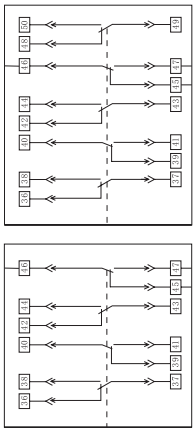

II. Five sets of transfer switches

III. Independent three normally open and three closed contacts

IV. Independent four normally open and four closed contacts

1#, 2#: Intelligent controller power;
3#, 4#, 5#: Fault trip contact output terminals (4# is common terminal);
6#, 7#: Circuit breaker state first set of aux. contact output terminals
8#, 9#: Circuit breaker state second set of aux. contact output terminals
12#, 13#: First set of signal contact output terminal;
14#, 15#: Second set of signal contact output terminal;
16#, 17#: Third set of signal contact output terminal;
18#, 19#: Fourth set of signal contact output terminal;
20#: Protection earth wire;
21#: N phase voltage input terminal;
22#: A phase voltage input terminal;
23#: B phase voltage input terminal;
24#: C phase voltage input terminal;
25#, 26#: External transformer input terminal (available for 3P+N)
36#~47#: Aux. contact terminal; (45#: Opening indicator; 47#: Closing indicator;)
SB1: Shunt button; SB2: Emergency opening button; SB3: Closing button; SB4: Motor energy storage button; Q: Undervoltage (instantaneous or delay) release; F: Shunt release; X: Closing electromagnet; M: Energy storage motor; SA: Motor travel switch; XT: Terminal block; AX: Aux. switch;

Notes: 1. Those in the dashed box are connected by the user, and a fuse protection is provided in the control circuit;
2. The terminal 33# can be directly connected to the power supply (automatic pre-storage of energy), and can be connected to the power supply after connecting the normally open button in series (manual pre-storage of energy).
3. If the Q, F, and X have the different control power voltage, they can be connected to the different power supply respectively. When the intelligent controller has a DC power supply, if there is an external power module, it can be connected to 1# and 2# through the power module inputs 1# and 2# rather than direct connection.

TGW1N Series Air Circuit Breaker

14.5 Wiring diagram of circuit 51 of TGW1N-2000-6300 circuit breaker with (M, 3M type) controller but without transformer connected (circuit 52 for drawer type, 52# is empty)

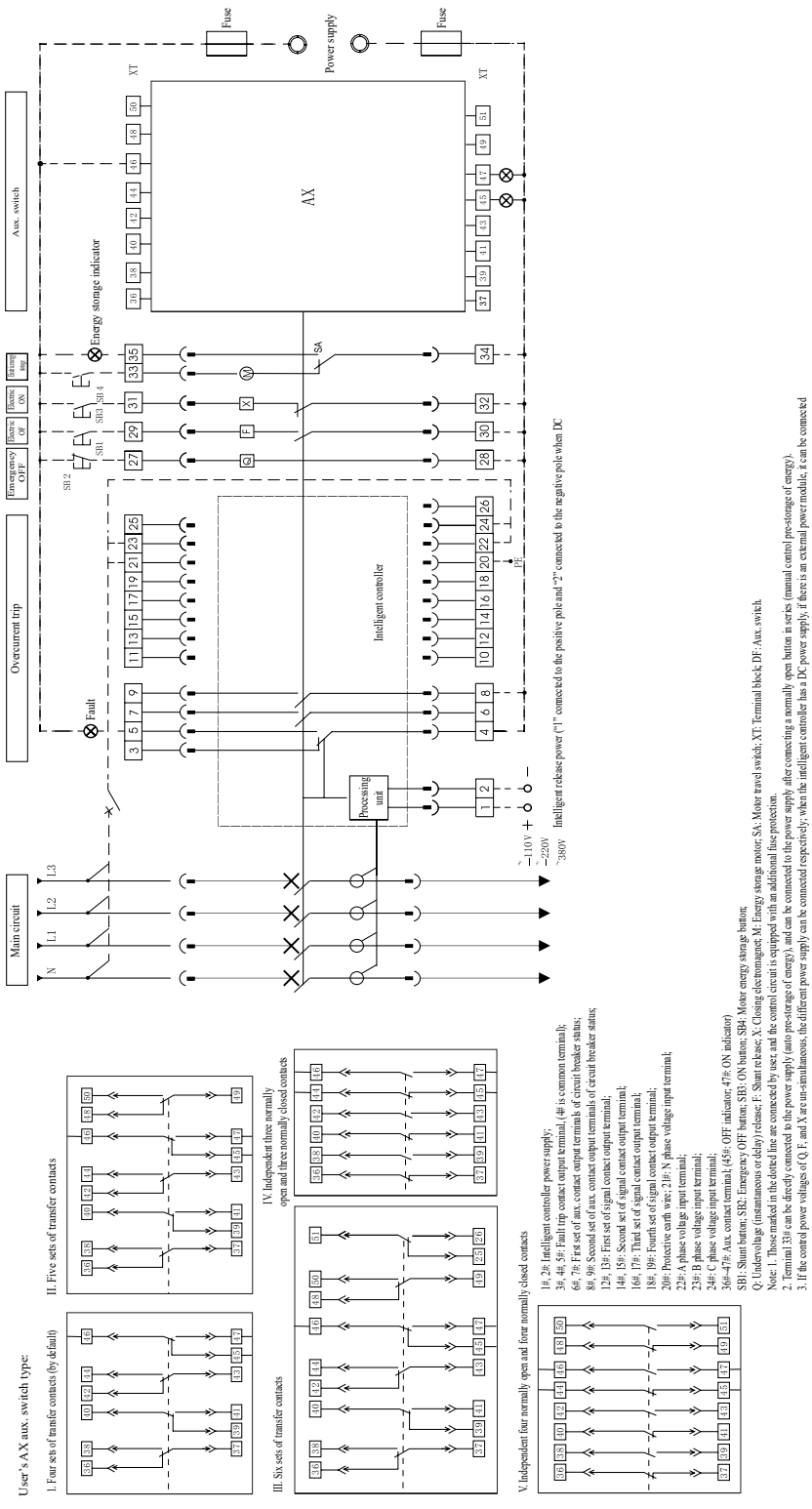

1#, 2#: Intelligent controller power supply;
3#, 4#, 5#: Fault trip contact output terminal, (4# is common terminal);
6#, 7#: First set of aux. contact output terminals of circuit breaker status;
8#, 9#: Second set of aux. contact output terminals of circuit breaker status;
12#, 13#: First set of signal contact output terminal;
14#, 15#: Second set of signal contact output terminal;
16#, 17#: Third set of signal contact output terminal;
18#, 19#: Fourth set of signal contact output terminal;
20#: Protective earth wire; 21#: N phase voltage input terminal;
22#: A phase voltage input terminal;
23#: B phase voltage input terminal;
24#: C phase voltage input terminal;
36#-47#: Aux. contact terminal; (45#: OFF indicator; 47#: ON indicator)

Q: Undervoltage (instantaneous or delay) release; F: Shunt release; X: Closing electromagnet; M: Energy storage motor; SA: Motor travel switch; XT: Terminal block; DF: Aux. switch.

Note: 1. Those marked in the dotted line are connected by user and the control circuit is equipped with an additional fuse protection.

2. Terminal 33# can be directly connected to the power supply (auto pre-storage of energy), and can be connected to the power supply after connecting a normally open button in series (manual control pre-storage of energy).

3. If the control power voltages of Q, F, and X are un-simultaneous, the different power supply can be connected respectively; when the intelligent controller has a DC power supply, if there is an external power module, it can be connected through the power module inputs 1# and 2# and cannot be directly connected to 1# and 2#.

SB: Shunt button; SB2: Emergency OFF button; SB3: ON button; SB4: Motor energy storage button;

TGW1N Series Air Circuit Breaker

14.6 47 secondary circuit wiring diagram of the circuit breaker with a (3H type) intelligent controller

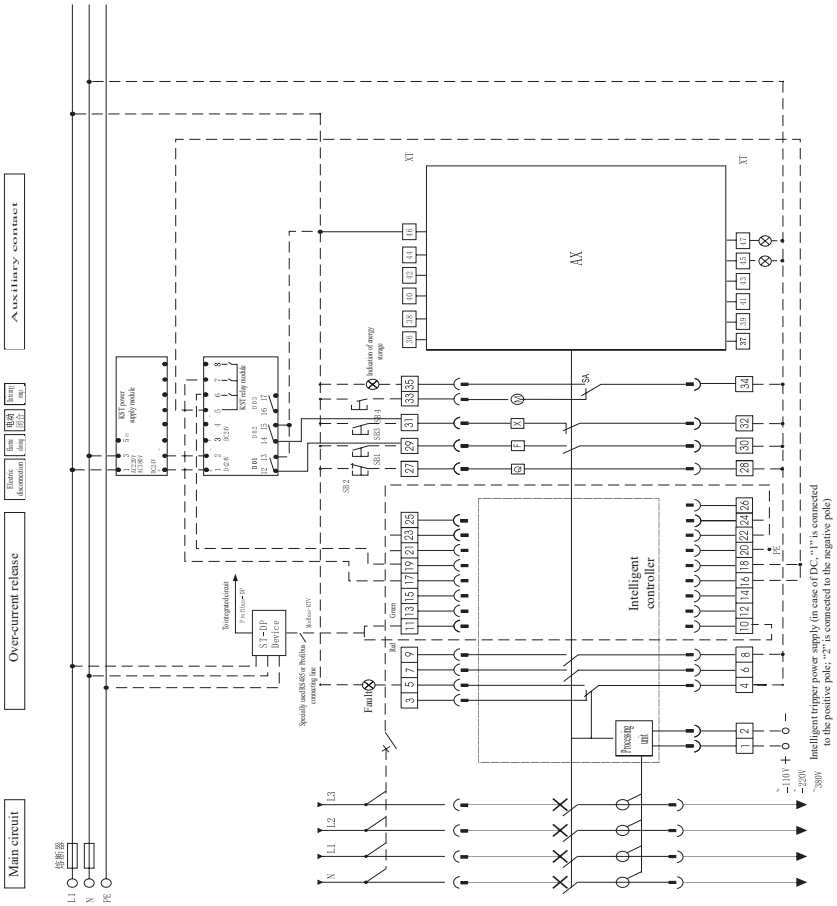

Wiring methods for users' communication protocol

I, Use Modbus protocol to communicate II, Use Profibus-Dp protocol to communicate

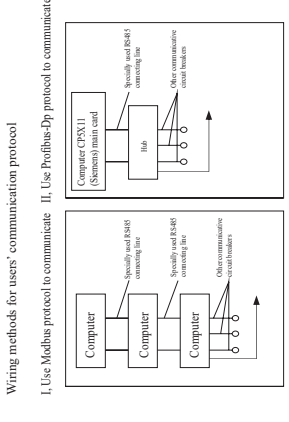

Type of AX Auxiliary contact for users:

I, 4 groups of transfer contacts (default configuration)

II, Independent 3NO+3NC contact

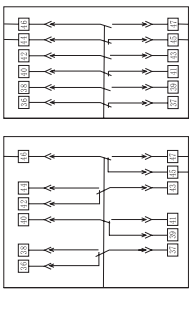

1#, 2#: Power supply of intelligent controller;
3#, 4#: Fault tripping contact output terminal (4# for common end);
6#, 7#: Output terminal of the second group of auxiliary contacts of the circuit breaker status;
8#, 9#: Output terminal of the second group of auxiliary contacts of the circuit breaker status;
10#, 11#: Communication interface output terminal;
12#, 13#: Output terminal of the first group of signal contact;
14#, 15#: Output terminal of the second group of signal contact;
16#, 17#: Output terminal of the third group of signal contact;
18#, 19#: Output terminal of the fourth group of signal contact;
20#: Protective grounding line;
21#: Phase N voltage input terminal;
22#: Phase A voltage input terminal;
23#: Phase B voltage input terminal;
24#: Phase C voltage input terminal;
25#, 26#: Input terminal of the external transformer (W type or (3P+N) T type);
36#~47#: Auxiliary contact terminals; (45#: Opening indication; 47#: Closing indication;)
SB1: Shunt button;
SB2: Emergency opening button;
SB3: Switching-ON button;
SB4: Electric energy storage button;
Q: Undervoltage (instantaneous or time-delay) release;
F: Shunt release;
X: Closing electromagnet;
M: Energy storage motor;
SA: Limit switch of electric motor;
XT: Wiring terminal;
DF: Auxiliary contact;

Note: 1. The dotted portion shall be wired by users. The control circuit shall be equipped with a fuse for protection.
2. Terminal 3.3# can be directly connected with the power supply (Automatic pre-storage of energy) and can be powered on after being connected with the NO button in series (manual pre-storage of energy).
3. If the voltages of the control power supplies of Q, F and X are different, they can connect with different power supplies. When the current of the intelligent controller is DC, if there is an external power supply module, 1# and 2# must be inputted through the power supply module. It shall not be connected to 1# and 2# directly.

TGW1N Series Air Circuit Breaker

15 Special Environments

15.1 Derating under different temperatures

Ambient temperature		+40°C	+45°C	+50 °C	+55°C	+60 °C
Allowable continuous working current	TGW1N-2000/2000H	1In	0.95In	0.9In	0.85In	0.80In
	TGW1N-2500 (H) /3200 (H) /4000(H)	1In	0.92In	0.86In	0.81In	0.74In
	TGW1N-6300	1In	0.93In	0.87In	0.81In	0.75In

15.2 Derating requirements under different altitudes

When the altitude exceeds 2,000 meters, insulation performance, cooling performance and pressure in the atmosphere will change. Its performance shall be modified in accordance with the following table.

15.2.1 Voltage

Altitude (m)	Power frequency withstand voltage (V)	Insulation voltage (V)	Rated working voltage (V)
2000	2200	1000	1000
3000	1955	800	800
4000	1760	700	700
5000	1600	600	600

15.2.2 Current

Altitude (m)	Power frequency withstand voltage (V)
2000	Ie
2500	0.93
3000	0.88
3500	0.83
4000	0.78
4500	0.73
5000	Need to contact the manufacturer

If the ambient temperature is +40°C~-5°C, Ie=In; if the ambient temperature exceeds 40°C, derate in strict accordance with the requirements in the instructions, while Ie ≠ In. Ie shall be inquired in accordance with the current and temperature.

TGW1N Series Air Circuit Breaker

16 Dual Power Control System

16.1 Dual power automatic transfer switch

Dual power automatic transfer switch is CB grade. It mainly consists of two sets of TGW1N series intelligent Air Circuit Breaker and power transfer switch controller. It is suitable for three-phase four-wire power grid with the frequency of 50/60Hz, and rated working voltage of 415V. Dual power automatic transfer switch is divided into two types: automatic transfer and restoration, power grid- generation. When ordering the dual power automatic transfer switch, please note that:

a. In order to prevent wrong wiring by the users, the dual power controller must be ordered together with the circuit breaker.

b. Cable interlocking and 4 sets of transfer auxiliary contacts must be ordered simultaneously (3 sets of transfer contacts are used actually by users).

c. The length of the special cable for dual power automatic controller is 2m. The length of the cable between two circuit breakers is 2m.

d. Key lock is prevented for the circuit breaker with dual power automatic controller.

e. The voltage of the control power supply of the dual power automatic controller is: AC220V.

f. The circuit breaker with the dual power automatic controller shall not be equipped with the opening and closing status gate interlock.

g. When the circuit breaker with the dual power automatic controller is equipped with a H type intelligent controller, the closing and opening functions of the remote-controlled circuit breaker shall not be used.

h. The circuit breaker must be equipped with the undervoltage release.

l. The circuit breaker and dual power supply automatic controller must be grounded reliably.

J. Type of dual power automatic controller:

Power grid – power grid, automatic transfer and restoration type:

Power grid – power generation, automatic transfer and restoration type.

Note: After wiring, the user shall press "↑" and "↓". If all lamps are on, it means that the product is qualified.

16.2 Outline and installation dimension of the dual power controller

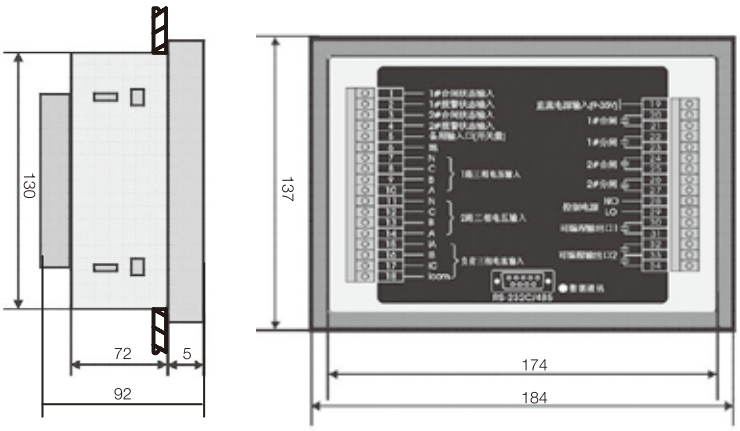

Note: Panel hole size (localizable) is (175×131) mm.

16.3 Dual power wiring diagram of TGW1N 4P circuit breaker.

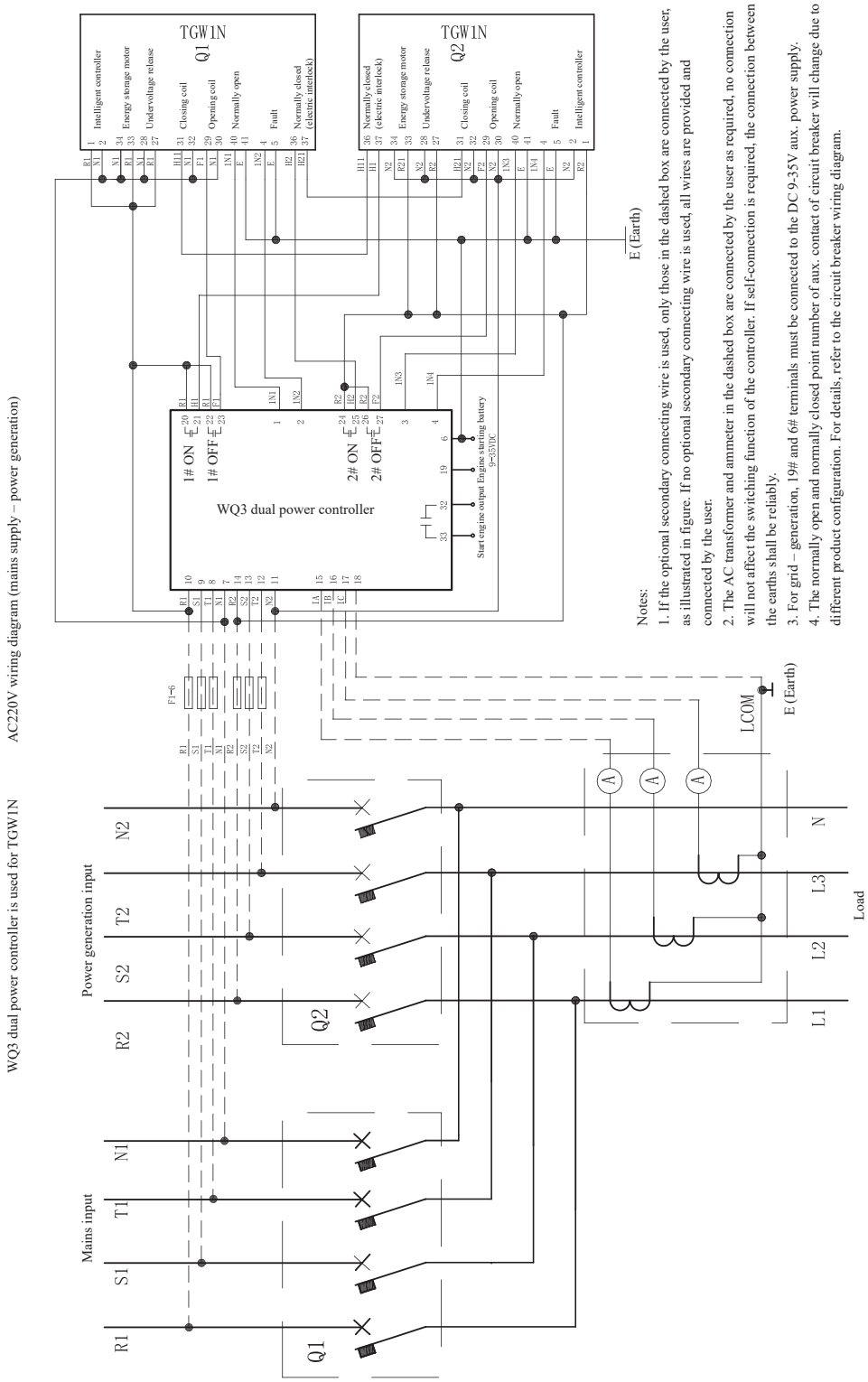

Notes:

1. If the optional secondary connecting wire is used, only those in the dashed box are connected by the user, as illustrated in figure. If no optional secondary connecting wire is used, all wires are provided and connected by the user.
2. The AC transformer and ammeter in the dashed box are connected by the user as required, no connection will not affect the switching function of the controller. If self-connection is required, the connection between the earths shall be reliably.
3. For grid – generation, 19# and 6# terminals must be connected to the DC 9-35V aux. power supply.
4. The normally open and normally closed point number of aux. contact of circuit breaker will change due to different product configuration. For details, refer to the circuit breaker wiring diagram.

TGW1N Series Air Circuit Breaker

Dual power wiring diagram of TGW1N four-pole circuit breaker.

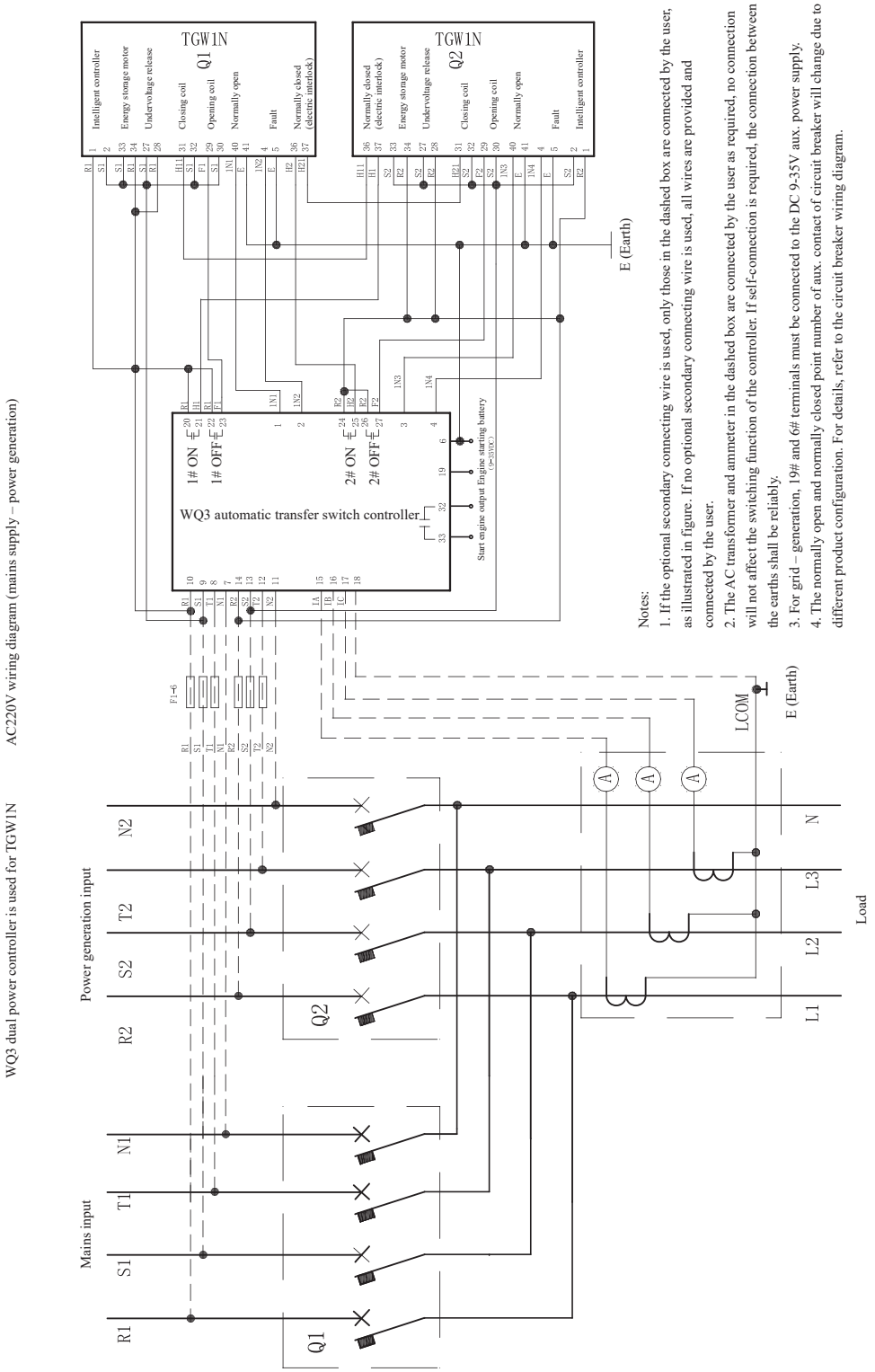

Notes:

1. If the optional secondary connecting wire is used, only those in the dashed box are connected by the user, as illustrated in figure. If no optional secondary connecting wire is used, all wires are provided and connected by the user.
2. The AC transformer and ammeter in the dashed box are connected by the user as required, no connection will not affect the switching function of the controller. If self-connection is required, the connection between the earths shall be reliably.
3. For grid – generation, 19# and 6# terminals must be connected to the DC 9-35V aux. power supply.
4. The normally open and normally closed point number of aux. contact of circuit breaker will change due to different product configuration. For details, refer to the circuit breaker wiring diagram.

TGW1N Series Air Circuit Breaker

17 Ordering Notice

When ordering, please fill in the following table.

<table>
<tr><td colspan="2">Buyer</td><td></td><td>Ordering quantity</td><td></td><td>Ordering time</td><td></td></tr>
<tr><td colspan="2">Model and specification</td><td>Frame rated current</td><td>Number of poles</td><td>□3P
□4P</td><td>Installation mode</td><td>□ Fixed type
□ Drawer-type</td></tr>
<tr><td colspan="7">Rated current In= A</td></tr>
<tr><td rowspan="5">Intelligent controller</td><td>Type</td><td colspan="5">□ M type (conventional) □ 3M type □ 3H type</td></tr>
<tr><td>Basic function</td><td colspan="5">□ Overload long-time delay protection □ Short circuit short-time delay protection □ Instantaneous short circuit protection □ Single-phase grounding protection
□ Current display function □ Fault memory function □ Test function</td></tr>
<tr><td>Additional function</td><td colspan="5">□ Voltmeter function □ Communications function □ Electric leakage protection □ MCR and HSISC □ DO/DI function</td></tr>
<tr><td>Grounding mode</td><td colspan="5">□ 3PT □ 4PT □ (3P+N)T type shall be connected to an external transformer □ (3P+N)W type shall be connected to an external transformer</td></tr>
<tr><td>Controller power supply</td><td colspan="5">□ AC220V/AC230V/AC240V □ AC380V/AC400WAC415V □ DC220V □ DC110V</td></tr>
<tr><td colspan="2" rowspan="4">Standard accessories</td><td>□ Shunt release</td><td colspan="4">□ AC220V/AC230V/AC240V □ AC380V/AC400V/AC415V □ DC220V □ DC110V</td></tr>
<tr><td>□ Closing electromagnet</td><td colspan="4">□ AC220V/AC230V/AC240V □ AC380V/AC400V/AC415V □ DC220V □ DC110V</td></tr>
<tr><td>□ Electric Motor operating mechanism</td><td colspan="4">□ AC220V/AC230V/AC240V □ AC380V/AC400V/AC415V □ DC220V □ DC110V</td></tr>
<tr><td>□ Auxiliary contact</td><td colspan="4">□ 4 groups of transfer contact (conventional) □ 5 groups of transfer contact □ Independent 3NO+3NC contacts</td></tr>
<tr><td colspan="2" rowspan="5">Optional accessories</td><td>□ Mechanical interlock</td><td colspan="4">□ Cable interlock □ Hard lever interlock □ Three locks with two keys □ Two locks with one key □ One key with one lock</td></tr>
<tr><td rowspan="2">□ Undervoltage release</td><td colspan="4">□ AC220V/AC230V □ AC240V □ AC380V/AC400V □ AC415V</td></tr>
<tr><td colspan="4">□ Undervoltage instantaneous release □ Undervoltage time-delay release (zero voltage) □ 1s □ 2s □ 3s □ 4s □ 5s □ 6s □ 7s</td></tr>
<tr><td>□ Phase partition</td><td colspan="4"></td></tr>
<tr><td>Connecting way</td><td colspan="4">□ Horizontal connection (conventional) □ Vertical connection (the drawings shall be provided by the user)</td></tr>
<tr><td colspan="2">Remarks</td><td>For other special requirements, please fill them in the remark column.</td><td colspan="4"></td></tr>
<tr><td colspan="7">Note:
1, If there is no special requirement, the all current values and time values for protection of the controller shall be set according to the factory default value.
2, Only one type of external transformer can be selected.
3, For special requirements, please fill them in the remark column.
4, Voltages of the control circuit of TGW1N-2000-6300 type product don’t include AC240V and AC415V.</td></tr>
</table>

TEW5 Series Air Circuit Breaker

1 Overview

TEW5 series air circuit breaker (hereinafter referred to as circuit breaker) is used in the AC 50Hz, 60Hz power distribution network with the rated voltage up to AC380V~AC690V and with the rated current ranged 200A~6300A for electric energy distribution and line and power equipment protection to prevent fault hazards such as overload, short circuit, undervoltage, single phase earthing or residual current. The circuit breaker has high breaking capacity and Icw=Ics=100%Icu, realizing full selective protection and improving power supply reliability. The circuit breaker has the communication and intelligence functions. With Tengen intelligent power distribution system equipped, the four remotes and cloud data management can be realized to adapt to the needs of the smart grid.

2 Type Designation

TE W 5 – 1600 / 3P 1600A □ □ 3M □ □ □ □ □ □

- Other requirements
  - Default: None
  - Lever interlock
  - Cable interlock
  - One lock and one key
  - Two locks and one key
  - Three locks and two keys
  - Electrical three-position indicator
  - Dual power controller
  - .....
- Application scenario
  - Default: None
  - Plateau
  - Damp hot
  - Salt spray
  - Low temperature
- Aux. contact code
  - Default:
  - Four-open four-closed (not specified)
  - Optional (specified)
  - Five-open five-closed
  - Six-open six-closed
- Undervoltage release voltage
  - Default: None
  - AC220V/230V
  - AC380V/400V
  - When the undervoltage voltage is inconsistent with the control circuit voltage, this shall be indicated
- Undervoltage release type
  - Default: None
  - Optional:Undervoltage instantaneous
  - Undervolage delay 1-10s
- Control circuit voltage
  - AC220V/230V
  - AC380V/400V
  - DC220V
  - DC110
  - If there are multiple voltage grades, this shall be indicated in the special instructions
- Controller code
  - M type
  - 3M type
  - 3H type
- Wiring mode
  - Horizontal
  - Vertical
  - Mixed
- Installation method
  - Fixed drawer
- Rated current
  - 200A
  - .....
  - 1600A
- Number of poles: 3P/4P
- Frame current: 1600/2500/4000/6300
- Design code
- Product code
- Enterprise code

TEW5 Series Air Circuit Breaker

3 Main Technical Parameters and Performance

Model			TEW5-1600	TEW5-2500	TEW5-4000	TEW5-6300
Rated operating current In (A)			200, 400, 630, 800, 1000, 1250, 1600	630, 800, 1000, 1250, 1600, 1900, 2000, 2500	25000, 2900, 3200, 3600, 3900, 4000	4000, 4900, 5000, 5900, 6300
Rated operating volage Ue (V)			AC380/400/415/690	AC380/400/415/690	AC380/400/415/690	AC380/400/415/690
Freq. (Hz)			50Hz/60Hz	50Hz/60Hz	50Hz/60Hz	50Hz/60Hz
Rated insulation voltage Ui (V)			1000	1000	1000	1250
Rated impulse withstand voltage Uimp (kv)			12	12	12	12
Rated current of N pole IN (A)			100%In	100%In	100%In	50%In
Rated limit short-circuit breaking capacity Icu (kA)		AC415V	67	100	100	135
		AC690V	50	75	85	120
Rated operating short-circuit breaking capacity Ics (kA)		AC415V	67	85	100	135
		AC690V	50	75	85	120
Rated short time withstand current Icw (kA) 1s		AC415V	55	85	100	135
		AC690V	42	75	85	120
Rated short time withstand current Icw (kA) 3s		AC415V	30	50	65	/
		AC690V	30	50	65	/
Rated short circuit marking capacity Icm (kA)		AC415V	147	220	220	297
		AC690V	105	165	187	264
Operation performance	Electrical life	AC415V	10000	10000	6000	6000(4000A) 4000(5000A) 2000(6300A)
		AC690V	6000	5000	3000	3500(4000A) 2500(5000A) 1500(6300A)
	Mechanical life	With maintenance	30000	30000	20000	13000
		Maintenance-free	15000	15000	10000	7000(3P) 6500(4P)
Full breaking time (ms) (No additional delay)			20~30	20~30	20~30	20~30
Closing time (ms)			≤70	≤70	≤70	≤70
Installation method		AC415V	■	■	■	■
		AC690V	■	■	■	■
Wiring mode		Horizonal wiring	■	■	■	■
		Vertical wiring	■	■	■	■
Outline dimensions (mm) W×H×D 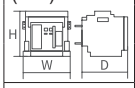	Fixed type	3P	254×331×200	378×412×298	438×412×299	782×412×406
		4P	324×331×200	473×412×298	553×412×299	897.5×412×406
	Drawer type	3P	282×359×299	368×448×408	412×448×408	779×459×516
		4P	352×359×299	463×448×408	527×448×408	895×459×516
Weight (kg)	Fixed type	3P	25	42	64	158
		4P	31	54	80	185
	Drawer type	3P	50	102	125	195
		4P	60	120	145	227

TEW5 Series Air Circuit Breaker

1 LED interface display

2 Fault and alarm reset button

3 "Run" LED
When the controller is energized in the normal working state, the green LED light will always flicker.

4 "Alarm" LED
LED does not light up during normal operation; the red LED light will quickly flicker in the event of fault trip; the red LED light is always on in the event of an alarm.

5 Communication indicator
It will be off when Profibus has no communication, and will be always on during communication; Modbus will be off if there is no communication, and will be always on during communication; Device Net will flicker if there is no communication, and will be always on during communication.

6 "AP" indicator
The blue LED is always on when the MCR and neutral line protection fails.

7 With USB communication interface and inspection and test interface included

8 Curve LED
There is a red LED indicator hidden inside the curve. The corresponding LED light flickers to indicate the fault type in the event of a fault trip; when the fault is set in the protection parameters, the LED light is always on to indicate the current set item.

9 "TEST" key
With the "TEST" button pressed, the controller will issue a trip command, and the circuit breaker is open to carry out the test to check whether the control hardware works normally.

TEW5 Series Air Circuit Breaker

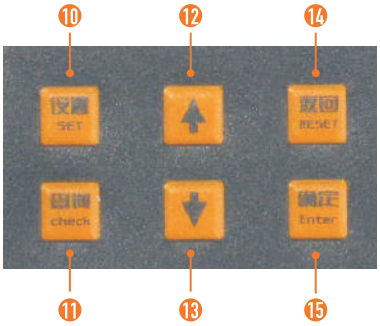

⑩ **Set**
Function key to switch to the Measurement and Parameters setting topic menu (it is a "Left" button in the password entry interface).

⑪ **Check**
Function key to switch to the protection parameters setting and history list, maintenance topic menu (it is the other menu in the password entry interface).

⑫ **Move up**
Move the menu content up from the current level, or move up to change the selected parameter.

⑬ **Move down**
Move the menu content down from the current level, or move down to change the selected parameter.

⑭ **Reset**
Exit the current menu level and enter the previous menu, or cancel the current selected parameter.

⑮ **Enter**
Enter the next menu indicated by the current item, or select the current parameter, or save the modified parameter.

TEW5 Series Air Circuit Breaker

4 Product Control Function Table

Vertical wiring

Horizontal wiring

Controller function			M	3M				3H			
				Basic	U	P	H	Basic	U	P	H
Protection	Overload long delay protection		■	■	■	■	■	■	■	■	■
	Short circuit short delay protection		■	■	■	■	■	■	■	■	■
	Short circuit instantaneous protection		■	■	■	■	■	■	■	■	■
	Earth fault protection (one-out-of-two)	Vector and earth fault protection	■	■	■	■	■	■	■	■	■
		Transformer center point earth fault protection	-	□	□	□	□	□	□	□	□
	Electric leakage protection (with earth or electric leakage selected)		-	□	□	□	□	□	□	□	□
	Neutral pole protection (4P, 3P+N)		■	■	■	■	■	■	■	■	■
	Overload pre-warning		■	■	■	■	■	■	■	■	■
	Current unbalance (phase loss) protection		□	□	□	■	■	□	□	■	■
	Demand current protection		-	□	□	□	■	□	□	□	■
	Overvoltage protection		-	-	□	■	■	-	□	■	■
	Undervoltage protection		-	-	□	■	■	-	□	■	■
	Voltage unbalance protection		-	-	□	■	■	-	□	■	■
	Over-frequency protection		-	-	□	□	■	-	□	□	■
	Under-frequency protection		-	-	□	□	■	-	□	□	■
	Phase sequence protection		-	-	□	□	■	-	□	□	■
	Reverse power protection		-	-	-	□	■	-	-	□	■
	Temperature protection	Contact temperature	-	□	□	□	□	□	□	□	□
		Contact/busbar/ambient temperature	-	-	-	-	-	□	□	□	□
	Thermal memory		■	■	■	■	■	■	■	■	■
	Load monitoring		□	□	□	□	□	□	□	□	□
	Regional selective interlocking		-	□	□	□	□	□	□	□	□
	MCR (marking and breaking function)		□	□	□	□	□	□	□	□	□
	HCISC (Out-of-limit trip function)_		□	□	□	□	□	□	□	□	□
	Remote reset		□	□	□	□	□	□	□	□	□
Measurement function	Current: Three-phase current, neutral pole current, earthing current		■	■	■	■	■	■	■	■	■
	Voltage: Line voltage, phase voltage, average voltage, voltage unbalance		-	-	■	■	■	-	■	■	■
	Power: Active power, reactive power, apparent power, power factor		-	-	-	■	■	-	-	■	■
	Frequency		-	-	□	■	■	-	□	■	■
	Electrical energy: Active electrical energy, reactive electrical energy, apparent electrical energy		-	-	-	■	■	-	-	■	■
	Harmonic wave		-	-	-	-	■	-	-	-	■
	Waveform capture		-	-	□	□	□	-	□	□	□
	Phase sequence		-	-	□	□	□	-	□	□	□
	Demand current		-	□	□	□	□	□	□	□	□
	Contact wear measurement		□	■	■	■	■	■	■	■	■
	Contact temperature measurement		-	□	□	□	□	□	□	□	□
	Primary terminal block temperature measurement		-	-	-	-	-	□	□	□	□
Contact output	Programmable contact output		-	□	□	□	□	■	■	■	■
High accuracy measurement	Grade 1.5 accuracy measurement		-	-	-	-	-	□	□	□	□
Wired communication	Based on RS485, standard Modbus protocol; other protocols can be customized		-	-	-	-	-	□	□	□	□
Wireless communication	Based on RS485, optional WiFi function module; APP software is available (select one from it and wired type)		-	-	-	-	-	□	□	□	□
	Based on the front panel USB port, optional Bluetooth function module; the APP software can be available		-	-	-	-	-	□	□	□	□
Test function	Function test		■	■	■	■	■	■	■	■	■
	Fault memory		Last 1 fault type	Last 8 trip parameters				Last 8 trip parameters			
	Displacement record		-	Last 8 trip record				Last 8 trip record			
	Alarm record		-								
	Self-diagnosis		■	■	■	■	■	■	■	■	■
	Fault state indication		■	■	■	■	■	■	■	■	■
	Numeric value displa		Digital tube	LCD	LCD	LCD	LCD	LCD	LCD	LCD	LCD
	Power grid historical parameters memory		-	□	□	■	■	□	□	■	■
	Operation times record		■	■	■	■	■	■	■	■	■

Note: 1600 frame has no remote reset function ■ Standard □ Optional - No

TEW5 Series Air Circuit Breaker

Charge

ON

OFF

Overload long delay protection

Protection characteristics		1.05Ir: ≤2h, no operation; 1.3Ir: ≤2h, operation										
Ir current setting value range		(0.4~1.0)In+OFF										
Inverse time operation characteristics		$I^2t=(1.5/N)^2*tr$										
Long delay operation Time Tr(s) Accuracy ± 10%	1.5Ir	15	30	60	120	240	360	480	600	720	840	960
	2Ir	8.44	16.9	33.7	67.5	135	202.5	270	337.5	405	472.5	540
	5Ir	0.94	1.9	3.7	7.5	15	22.5	30	37.5	45	52.5	60
	7.2Ir	0.65	1.3	2.6	5.2	10.4	15.6	20.8	26	31.3	36.5	41.7
Thermal memory time		Instantaneous/10/20/30/45/60/120/180min										

Note: N is the value of the fault current divided by the multiple of the set current, I/Ir; t is the fault action delay time.

Short circuit short delay protection

Protection characteristics		≤0.9Isd: No operation; >1.1Isd: Operation				
Isd current setting value range		Isd=(1.5~15)In+OFF				
Long delay operation Time Tr(s) Accuracy ± 10%	Definite time	Setting time s (Tsd)	0.1	0.2	0.3	0.4
		Delay (ms)	60	160	255	340
		Max. braeking time (ms)	140	240	345	460
	Inverse time	The curve is same as the overload long delay curve, but its operation delay time is 1/10 long delay time.				

Short circuit instantaneous protection

Protection characteristics	Less than 0.85Ii: No operation Greater than 1.15Ii: Operation
Ii short circuit instantaneous setting current	Ii=(1.5~20)In+OFF

Earth fault protection

Protection characteristics	< 0.8Isd: No operation >1.0Isd: Delay operation
Current setting value Ig	(0.2~1.0)In+OFF Min.100A
Time setting range tg accuracy ± 10%	0.1s~ 1s, step size 0.Is

Intelligent controller factory setting value

Trip curve	Long delay		Short delay		Instantaneous	Earth fault	
	IR	Tr	Isd	Tsd	Ii	Ig	tg
	1.0In	60s	8In	0.2s	12In	0.8In	0.4s

Overload long delay protection action time table

Curve type	Fault current	Delay time (s)															
		c1	c2	c3	c4	c5	c6	c7	c8	c9	c10	c11	c12	c13	c14	c15	c16
S1 standard reverse time	1.5xIr	0.6	0.98	1.47	2.46	3.68	4.91	6.14	9.21	11.05	17.19	24.56	36.84	49.13	61.41	73.69	85.97
	2xIr	0.36	0.57	0.86	1.43	2.15	2.87	3.58	5.37	6.45	10.03	14.33	24.49	28.65	35.82	42.98	50.15
	6xIr	0.14	0.22	0.33	0.55	0.82	1.10	1.37	2.06	2.47	3.84	5.48	8.22	10.96	13.70	16.45	19.19
	7.2xIr	0.12	0.20	0.30	0.50	0.74	0.99	1.24	1.86	2.23	3.48	4.97	7.45	9.93	12.42	14.90	17.38
V1 Velocity inverse time	1.5xIr	2.00	3.20	4.80	8.00	12.00	16.00	20.00	27.00	36.00	56.00	80.00	120.00	160.00	200.00	240.00	280.00
	2xIr	1.00	1.60	2.40	4.00	6.00	8.00	10.00	13.50	18.00	28.00	40.00	60.00	80.00	100.00	120.00	140.00
	6xIr	0.20	0.32	0.48	0.80	1.20	1.60	2.00	2.70	3.60	5.60	8.00	12.00	16.00	20.00	24.00	280.00
	7.2xIr	0.16	0.26	0.39	0.65	0.97	1.29	1.61	2.18	2.90	4.52	6.45	9.68	12.90	16.13	19.35	22.58
EI(G) Special inverse time (general power distribution protection)	1.5xIr	8.00	12.80	19.20	32.00	48.00	64.00	80.00	108.00	144.00	224.00	320.00	480.00	640.00	800.00	960.00	1040.0
	2xIr	3.33	5.33	8.00	13.33	20.00	26.67	33.33	45.00	60.00	93.33	133.33	200.00	266.67	333.33	400.00	433.33
	6xIr	0.29	0.46	0.69	1.14	1.71	2.29	2.86	3.86	5.14	8.00	11.43	17.14	22.86	28.57	34.29	37.14
	7.2xIr	0.20	0.31	0.47	0.79	1.18	1.57	1.97	2.66	3.54	5.51	7.84	11.80	15.74	19.67	23.60	25.57
EI(M) Special inverse time (motor protection)	1.5xIr	6.22	9.96	14.9	24.89	37.34	49.78	62.23	84.01	112.01	174.24	248.91	373.37	497.82	622.28	746.73	808.96
	2xIr	2.95	4.72	37.07	11.79	17.69	23.58	29.48	39.79	53.06	82.53	117.90	176.86	235.81	294.76	353.71	383.19
	6xIr	0.28	0.45	0.68	1.13	1.69	2.26	2.82	3.81	5.08	7.90	11.29	16.94	22.58	28.23	33.88	36.70
	7.2xIr	0.20	0.31	0.47	0.78	1.17	1.56	1.95	2.63	3.51	5.46	7.80	11.70	15.61	19.51	23.41	25.36
HV high-voltage fuse compatible	1.5xIr	2.46	3.94	5.91	9.85	14.77	19.69	24.62	33.23	44.31	68.92	98.46	147.69	196.92	246.15	295.38	320.00
	2xIr	0.67	1.07	1.60	2.67	4.00	5.33	6.67	9.00	12.00	18.67	26.67	40.00	53.33	66.67	80.00	86.67
	6xIr	0.01	0.01	0.02	0.03	0.05	0.06	0.08	0.10	0.14	0.22	0.31	0.46	0.62	0.77	0.93	1.00
	7.2xIr	0.00	0.01	0.01	0.01	0.02	0.03	0.04	0.05	0.07	0.10	0.15	0.22	0.30	0.37	0.45	0.48
I^2 general inverse time protection	1.5xIr	15.0	30.00	60.00	120.00	240.00	360.00	480.00	600.00	720.00	840.00	960.00					
	2xIr	8.44	16.88	33.75	67.50	135.00	202.50	270.00	337.50	405.00	472.50	540.00					
	6xIr	0.94	1.88	3.75	7.50	15.00	22.50	30.00	37.50	45	52.50	60.00					
	7.2xIr	0.65	1.30	2.60	5.21	10.42	15.60	20.83	26.04	31.25	36.46	41.67					

TEW5 Series Air Circuit Breaker

5 Production Characteristic

5.1 3M/3H controller earth fault protection time/current characteristic curve

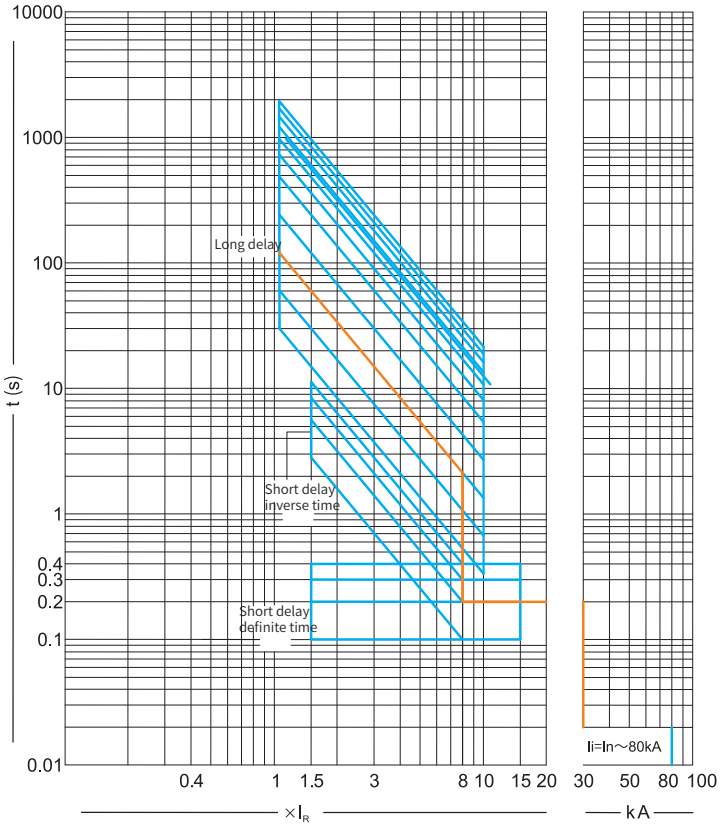

I_R=0.4In~1.0In, T_R=15s~960s total of 11 grades; Isd=1.5I_R~15I_R; Ii=1.0In~20In

Note 1: Definite time short delay time Tsd=0.1s~0.4s; the short delay reverse time characteristics are same as the overload long time, but its action delay time is only 1/10 long delay time.
Note 2: The red curve is the factory setting curve, and the instantaneous Ii takes 12In=30kA as an example.

TEW5 Series Air Circuit Breaker

5.2 3M/3H controller general I2t protection characteristic time and current curve

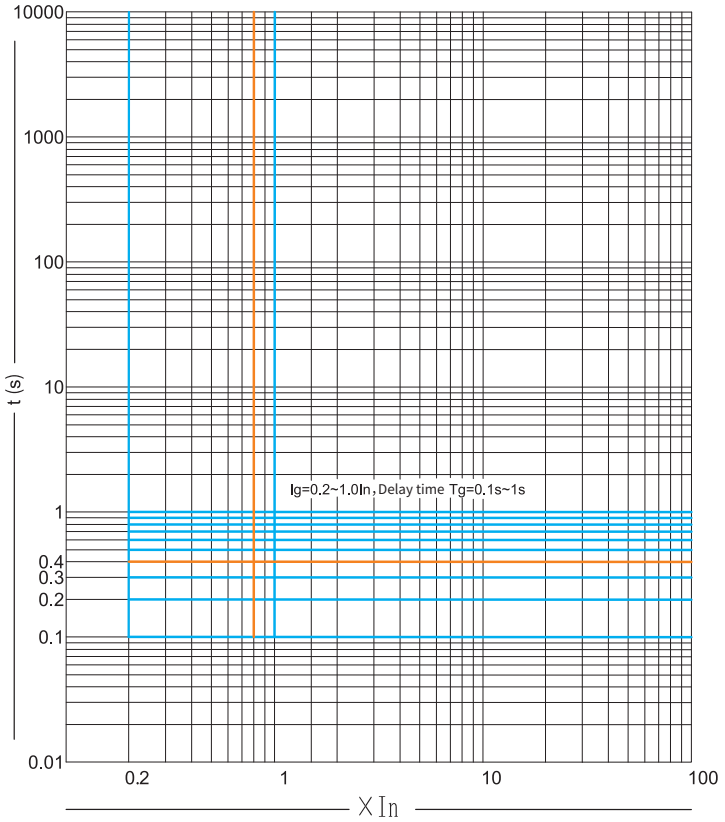

TEW5 Series Air Circuit Breaker

6 Working and installation conditions

6.1 Ambient temperature
The product can work in the range -45°C-+70°C, and the mean temperature within 24 hours does not exceed +35°C. If higher than +40°C, derating is required.

6.2 Atmospheric conditions
The relative temperature does not exceed 50% at ambient temperature +40°C, and a higher relative humidity is allowed lower temperatures. When the mean monthly minimum temperature is +25°C, the relative humidity can be up to 90%. Condensation occurred on the surface of the product due to temperature changes shall be considered.

6.3 Altitude
5000 m altitude is available. If more than 2000 m, the altitude derating is required.

6.4 Installation Category
Main circuit and voltage release coils of circuit breaker and primarily coils of power transformer: Class IV; auxiliary circuit and control circuit: Class III.

Pollution degree: Level 3
Use category: Class B
Protection grade: IP40 (installed in the small chamber with door frame equipped of cabinet)
Electromagnetic compatibility: Electromagnetic environment A
Installation angle: The vertical slope does not exceed 5°

TEW5 Series Air Circuit Breaker

Accessories

8

9

10

Remote operation

1 Shunt release
2 Closing electromagnet
3 Undervoltage release
4 Undervoltage delay release
5 Motor mechanism

6

7

Locks

6 Key lock
7 Mechanical interlock

Indicators and protection accessories

8 Aux. switch
9 Three-position indicator
10 Controller reset button
11 Closing OK mechanical indicator
12 Protective cover
13 Door frame
14 Phase partition
15 Button protective cover

Controller accessories

16 N phase external transformer
17 Electric leakage transformer
18 Earthing transformer
19 Power module
20 Relay module
21 DC power module
22 Temperature acquisition module
23 Dual power automatic conversion module
24 Counter

16

17

18

11

12

13

14

15

1

2

3

4

5

19

20

21

22

23

24

TEW5 Series Air Circuit Breaker

7 Accessories

7.1 Shunt release

The shunt release works in the short time work system mode to remotely disconnect the circuit breaker.

Dedicated for TEW5-1600 frame

Rated control power voltage Us (V)	AC230V	AC400V	DC110V	DC220V
Required power	280VA	340VA	310W	380W
Operating voltage (V)	(0.7~1.1)Us			
Opening time (ms)	Up to 30			

Dedicated for TEW5-2500/4000/6300 frame

Rated control power voltage Us (V)	AC230V	AC400V	DC110V	DC220V
Required power	590VA	740VA	660W	820W
Operating voltage (V)	(0.7~1.1)Us			
Opening time (ms)	Up to 30			

7.2 Closing electromagnet

The closing electromagnet works in the short time work system mode. When the energy storage of the motor is completed, the closing electromagnet can work to release the energy storage spring force of the operating mechanism instantaneously making the circuit breaker closed quickly.

Dedicated for TEW5-1600 frame

Rated control power voltage Us (V)	AC230V	AC400V	DC110V	DC220V
Required power	280VA	340VA	310W	380W
Operating voltage (V)	(0.85~1.1)Us			
Opening time (ms)	Up to 70			

Dedicated for TEW5-2500/4000 frame

Rated control power voltage Us (V)	AC230V	AC400V	DC110V	DC220V
Required power	590VA	740VA	660W	820W
Operating voltage (V)	(0.85~1.1)Us			
Opening time (ms)	Up to 70			

7.3 Aux. switch

With multiple sets of passive contacts provided for users

Dedicated for TEW5-1600

Rated operating voltage Us (V)	AC230V	AC400V	DC110V	DC220V
Rated current Ie (A)	1.5	0.9	0.55	0.27
Conventional thermal current Ith (A)	6			

Note: The standard aux. contacts are 4 normally open and 4 normally closed contacts, and the 5 normally open and 5 normally closed contacts and 6 normally open and 6 normally closed contacts are both available.

Dedicated for TEW5-2500/4000 frame

Rated operating voltage Us (V)	AC400V	DC250V
Rated current Ie (A)	2	0.3
Conventional thermal current Ith (A)	10	

Note: The standard aux. contacts are 4 normally open and 4 normally closed contacts, and the 6 normally open and 6 normally closed contacts, 8 normally open and 8 normally closed contacts and 10 normally open and 10 normally closed contacts are all available.

TEW5 Series Air Circuit Breaker

7.4 Door frame

Installed on the cabinet door with the protection grade up to IP40, it is available for fixed type and drawer type.

7.5 Temperature acquisition module

The temperature sensor is used to collect the temperature values of the external busbars of a total of 8 circuits including 4 inlet circuits and 4 outlet circuits, and transmit those temperature values to the controller for real-time monitoring by the system.

External AC/DC24V power supply; Ambient temperature range: -10°C to 70°C
Power consumption: Less than 2W Storage temperature range: -25°C to 85°C
Protection grade: IP20 Installation method: Direct fixed type or DIN rail type
Busbar temperature range: 60°C to 180°C
Dimensions (W x H x D): 72mm x 90mm x 30mm

7.6 Motor mechanism

With electric energy storage function.

Dedicated for TEW5-1600

Rated control power voltage Us (V)		AC230V	AC400V	DC110V	DC220V
Power required	TEW5-1600	75VA	75VA	75W	75W
	TEW5-2500	85VA	85VA	85W	85W
	TEW5-4000	150VA	150VA	150W	150W
Operating voltage (V)		(0.85~1.1)Us			
Energy storage time (s)		Up to 5			

7.7 Mechanical interlock

Mechanical interlock forms available

Interlock form	Between two circuit breakers		Between three circuit breakers	
	Horizontal	Vertical	Horizontal	Vertical
Cable interlock	√	√	×	×
Lever interlock	×	√	×	√

Notes: The maximum distance of the cable interlock is 2 M.
The maximum distance of the lever interlock is 1 M.

7.8 Phase partition

Used to enhance the insulation strength between the busbars

7.9 Button protective cover

The protective cover of the button is used to protect the closed/open button of circuit breaker. Once locked, the manual closing and opening operation cannot be carried out to prevent mis-operation by unrelated personnel (lock shall be provided by customer)

TEW5 Series Air Circuit Breaker

7.10 Undervoltage release

If the undervoltage release is not energized, the circuit breaker cannot be closed manually or electrically.

The undervoltage release is divided into the instantaneous trip and delay trip. Which one is ordered by the user according to the actual needs.

The delay time of the delay undervoltage release is 1~10s.

Rated control power voltage Us (V)	AC230V	AC400V
Power required	125VA	110VA
Release operation time	Instantaneous/delay 1, 3, 5, 10s	
Release operating voltage value	(35%~70%)Ue	Make the circuit breaker open
	≤35%Ue	Circuit breaker unable to close
	≥85%Ue~110%Ue	Circuit breaker can be closed reliably
When the power voltage restores to 85%Ue within 1/2 delay time		Circuit breaker cannot be open

Note: The accuracy of delay time is ±10%.

7.11 Key lock

The key lock can be used to fix the circuit breaker open button in the pressed position, and at this time the circuit breaker cannot be closed.

Operation instructions:
One circuit breaker is equipped with a lock and a key, and the circuit breaker cannot be closed in the lock state;
Two circuit breakers are equipped with two same locks and a key, and only a single circuit breaker is allowed to be closed;
Three circuit breakers are equipped with three same locks and two keys, and only two circuit breakers are allowed to be closed.

Specific operations: First insert the key into the lock hole of the circuit breaker, press the opening button and turn it clockwise; at this time the circuit breaker can be closed but the key cannot be taken out. To remove the key, please open the circuit breaker, press the opening button, and turn the key counter clockwise and take it out; at this time the circuit breaker cannot be closed.

7.12 Counter

The counter increments by 1 upon completion of energy storage (cannot be reset) and shows the total count of operations: 1600A F/4000A.
Founted on the mechanism; other housing frames are mounted on the motor.

TEW5 Series Air Circuit Breaker

7.13 Power modules

Used as the power supply of the relay module or TEW5-1600 controller

The TEW5-1600 controller shall have an external power module. When the power voltage is AC230V, AC400V, this voltage shall be converted to DC24V power voltage through this power module to supply it to the controller.
ST power module (IV) can provide DC 24V power supply with the power of not less than 9.6W, and can output four sets of terminal blocks and input AC or DC common voltage (AC/DC220V).
Used as a ST201 relay module power supply, the product adopts 35mm standard rail and direct fixed installation methods.
Note: Except for 1600 frame, other frames are optional accessories.

Installation dimensions are shown in figure below:

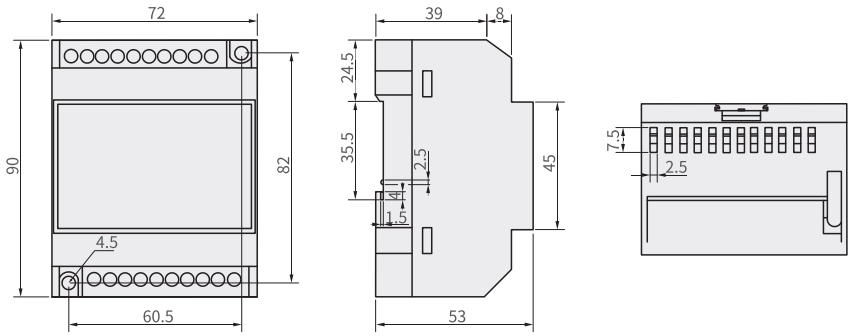

7.14 Relay module

Standard module with remote control of communication function

The signal unit of the controller output is generally used for fault alarm or indication. When it is used to open or close the circuit beaker or the capacity of the carried load is larger, the conversion through the ST201 relay module is required for control. The contact capacity of the ST201 relay is as follows: AC250V, 10A, DC28V, 10A. The module is installed on a standard 35 mm rail.
The installation dimensions are same as those of the ST power module.

7.15 DC power module

Standard module at the control circuit volage DC110V, DC220V

When the DC intelligent controller is selected, the DC power DC110V and DC220V are converted to DC24V through this DC power module, and then supply this voltage to the intelligent controller.

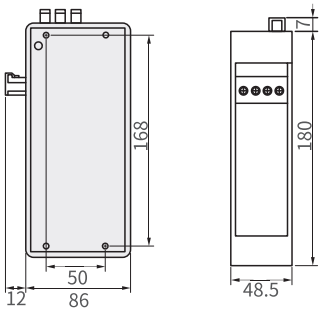

TEW5 Series Air Circuit Breaker

7.16 Leakage transformer

When the earthing protection of the electric leakage type (E), the external special rectangular transformer is required.

Outline and installation structure diagram

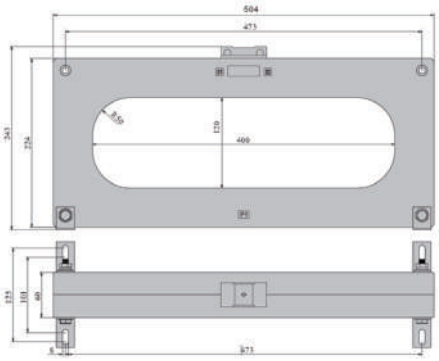

7.17 Earthing transformer

With an earth current protection intelligent frame circuit breaker, it can be used to sample the earth current signal.

Outline and installation structure diagram

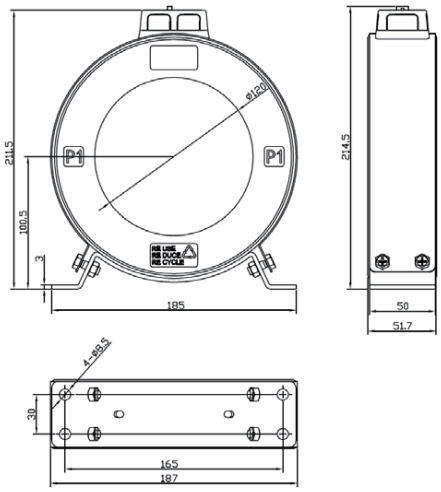

TEW5 Series Air Circuit Breaker

7.18 N phase external transformer

When the 3P+N earth mode is selected by user, an additional neutral pole transformer or earth current transformer is required.

The installation dimensions are as follows: (Regardless of whether the main circuit inlet direction is the upper or lower inlet, the N-pole transformer should always be consistent with the direction of the transformers of other three poles. When the wiring mode is the upper inlet, the wiring direction of the N phase transformer is shown in figure below; when the wiring mode is the lower inlet, the direction is opposite.)

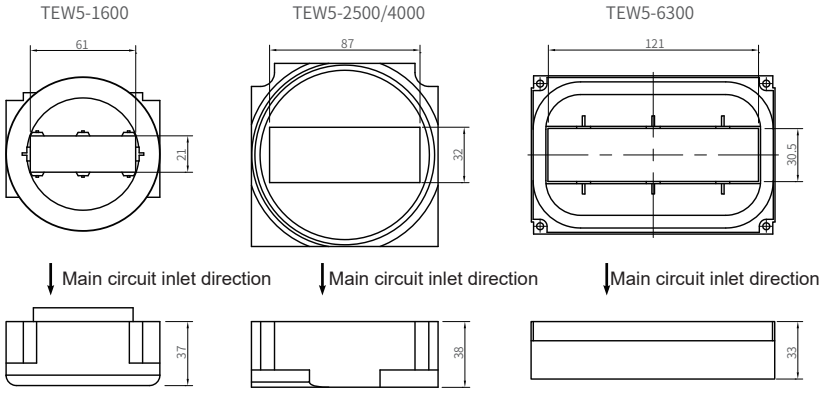

7.19 Dual power automatic conversion module

Used for automatic conversion between two circuits of mains supplies, two circuits of power generation or between one circuit of mains supply and one circuit of power generation.

Power supply: DC input DC9~35V (connected when the start signal of the oil engine is required); AC input: taken from one or two A, N phase voltage; it can work only when one of the circuits is energized, with single-phase voltage > 180V; AC input voltage: AC220V±15% (single phase)/ AC380V±15% (three phases) 50HZ; input three-phase current: 0~5A.

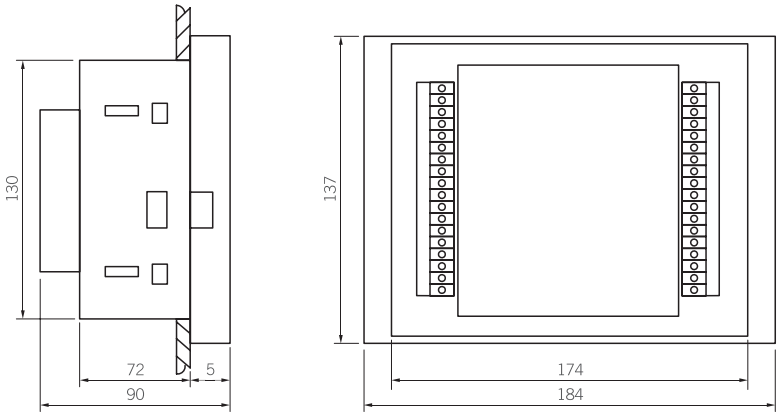

Note: The size of the hole on the panel is 175 x 131 mm

TEW5 Series Air Circuit Breaker

7.19 Busbar controller

The busbar controller is an intelligent busbar control module integrating with automatic measurement, LCD display and digital communication.

The busbar controller integrates digitalization, intelligence and networking, and it is an ideal product for busbar control thanks to its automatic measurement and control process and reduction of human errors.
The busbar controller is composed of a microprocessor as the core to accurately detect three-phase voltages of two circuits, make accurate judgments on voltage abnormalities (overvoltage, undervoltage, phase loss) and output passive switching value. By fully considering the application of the two inlets and one busbar on the power supply system, this device has two optional control models of automatic busbar transfer and incoming line automatic busbar transfer. With compact structure, advanced circuit, simple wiring, and high reliability, the product can be widely used in many industries such as electric power, post and telecommunications, petroleum, coal, metallurgy, railway, municipal, and intelligent buildings.

Outline and installation structure
This controller is designed to be of the panel mounted type, and it is fixed by a clamp during installation.

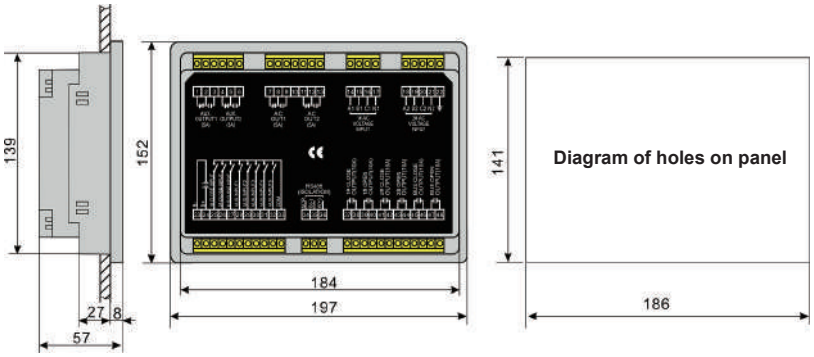

Note: Unit (mm)

TEW5 Series Air Circuit Breaker

8 Installation dimensions

TEW5-1600 fixed type

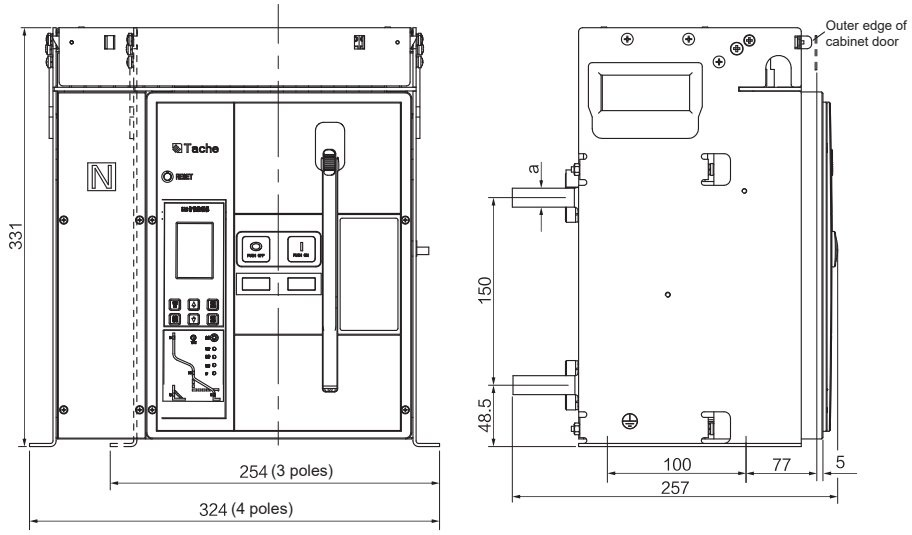

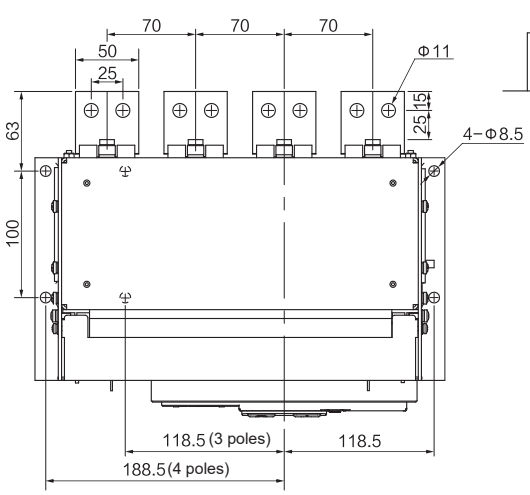

Horizontal connection

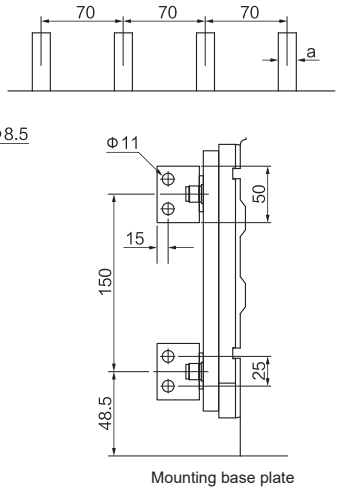

Vertical connection

Current spec.	a
200, 400, 630, 800, 1000	10
1250, 1600	15

TEW5 Series Air Circuit Breaker

TEW5-1600 drawer type

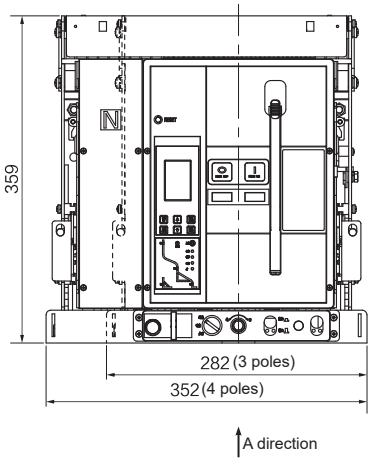

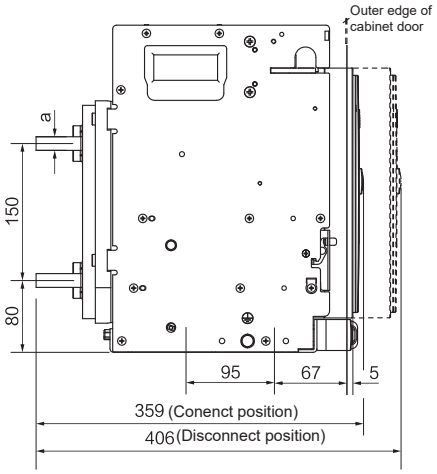

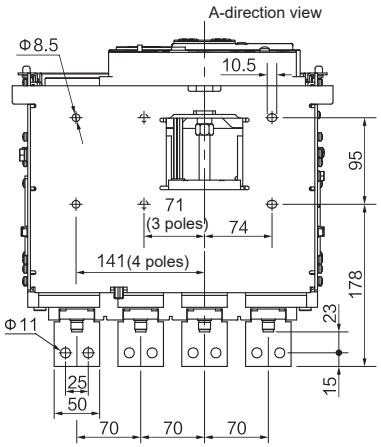

Horizontal connection

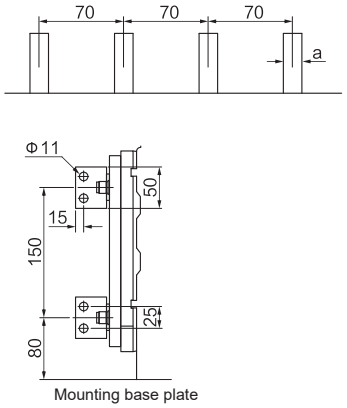

Vertical connection

Current spec.	a
200, 400, 630, 800, 1000	10
1250, 1600	15

TEW5-1600 door frame
Hole size

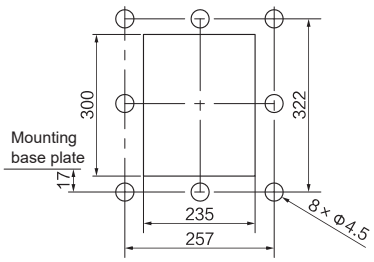

Fixed type

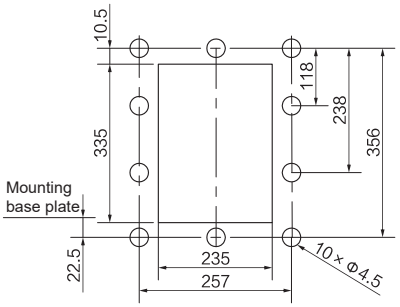

Drawer type

TEW5 Series Air Circuit Breaker

TEW5-2500 fixed type

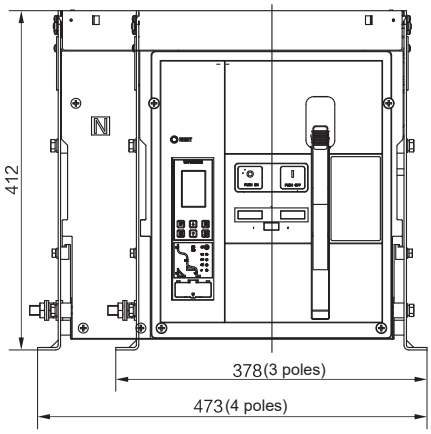

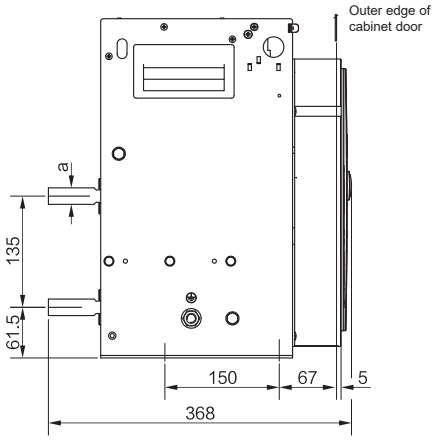

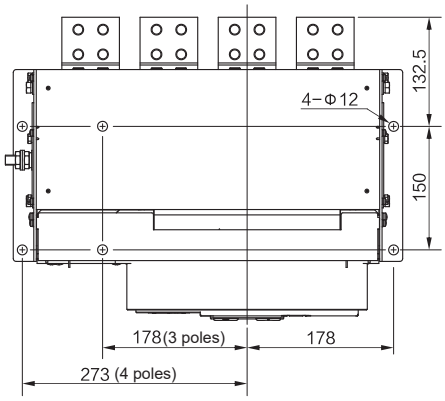

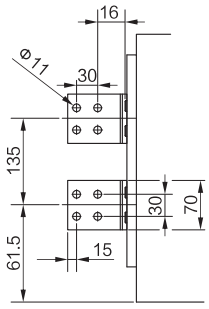

Mounting base plate

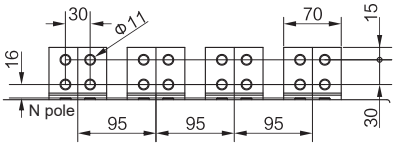

Horizontal connection

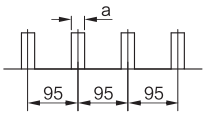

Vertical connection

Current spec.	a
800, 1000, 1250, 1600 1900, 2000, 2500	20

TEW5 Series Air Circuit Breaker

TEW5-2500 drawer type

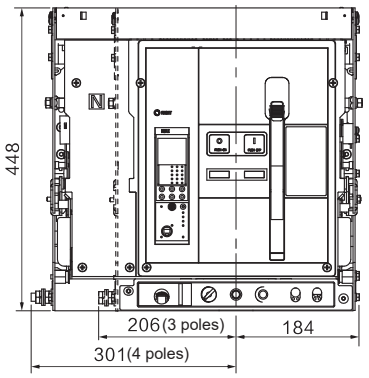

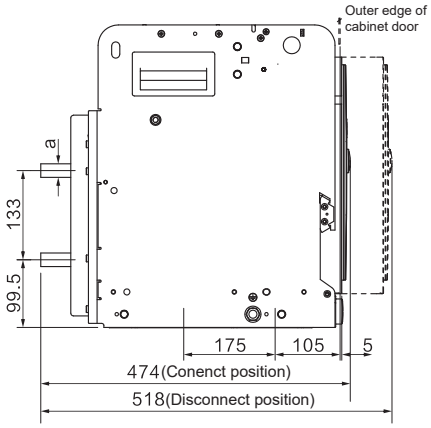

A direction

A-direction view

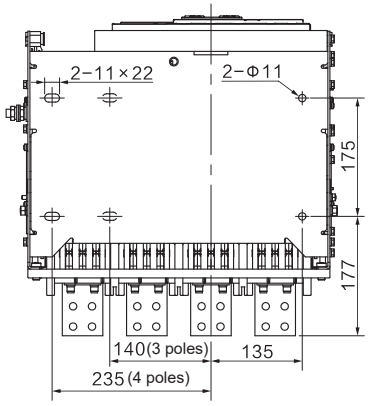

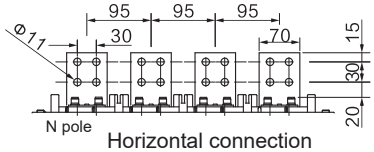

Horizontal connection

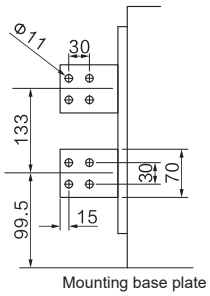

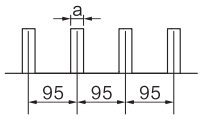

Vertical connection

Current spec.	a
800, 1000, 1250, 1600 1900, 2000, 2500	20

TEW5-2500 door frame Hole size

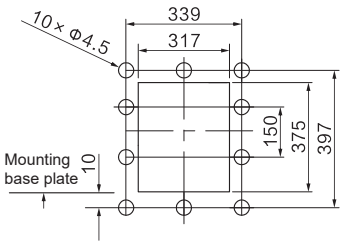

Fixed type

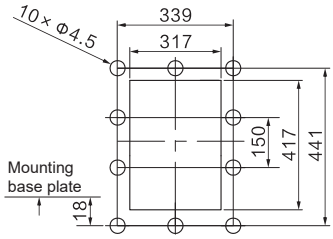

Drawer type

TEW5 Series Air Circuit Breaker

TEW5-4000 fixed type

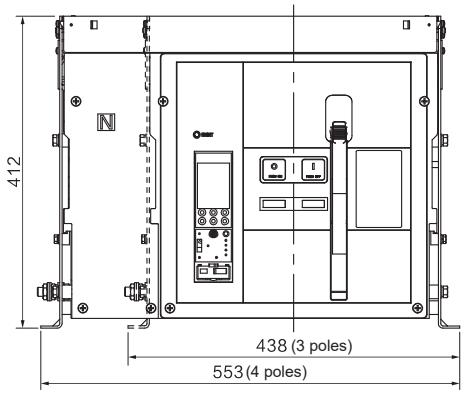

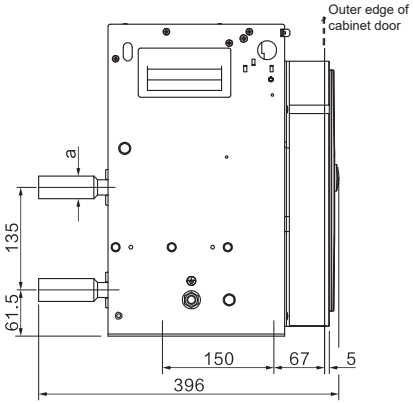

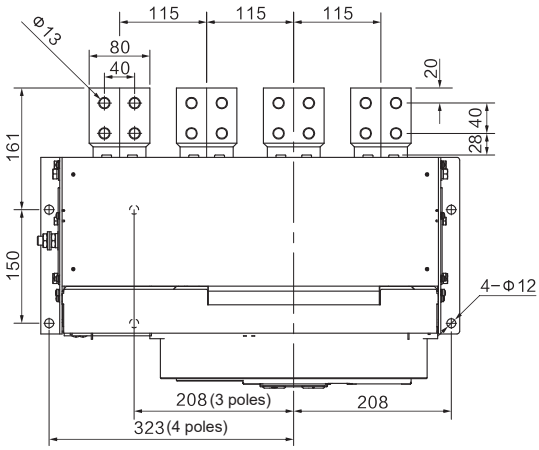

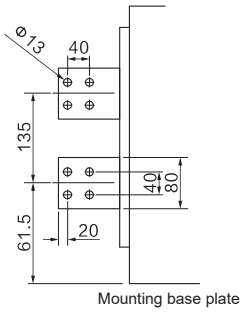

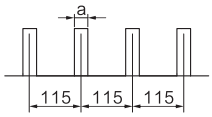

Vertical connection

Current spec.	a
2900, 3200, 3600, 3900, 4000	30

TEW5 Series Air Circuit Breaker

TEW5-4000 drawer type

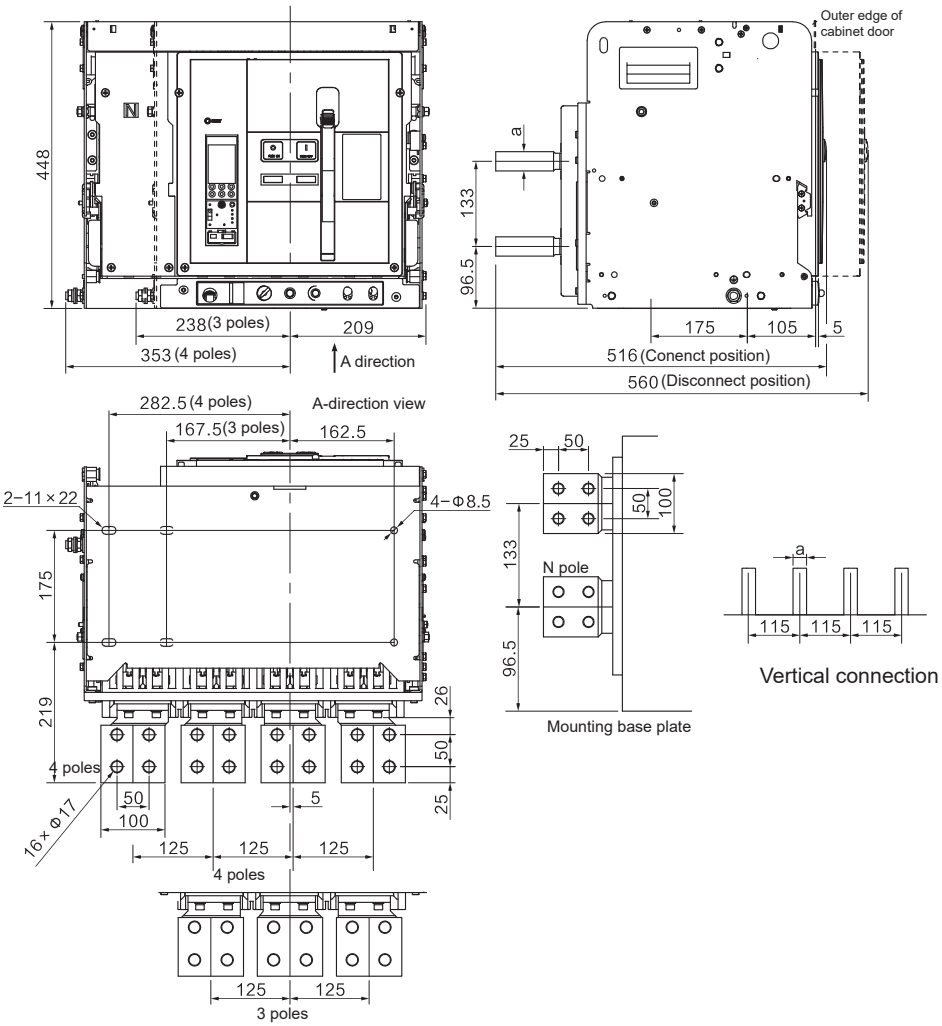

Current spec.	a
2900, 3200, 3600, 3900, 4000	30

TEW5-4000 door frame
Hole size

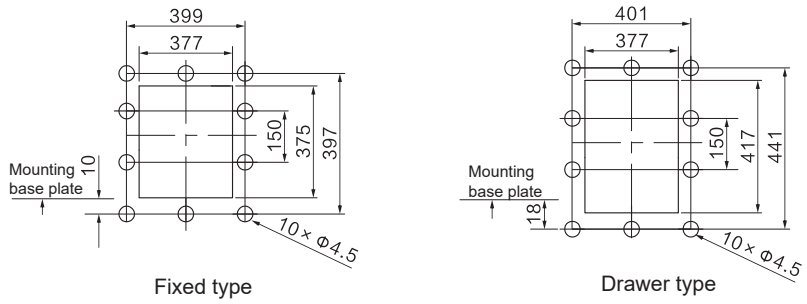

TEW5 Series Air Circuit Breaker

TEW5-6300/3P drawer type

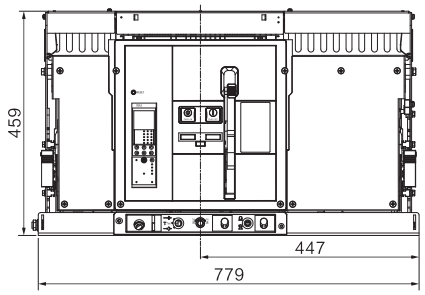

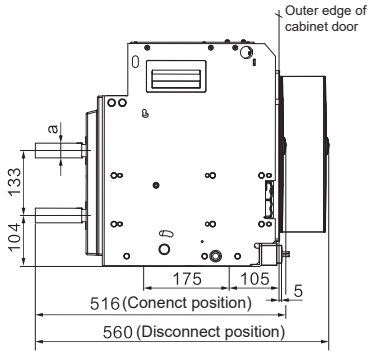

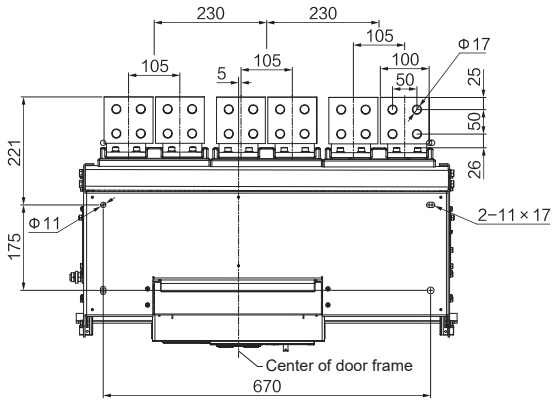

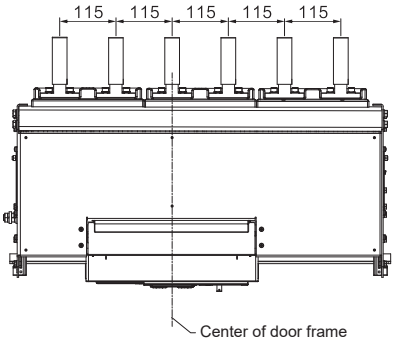

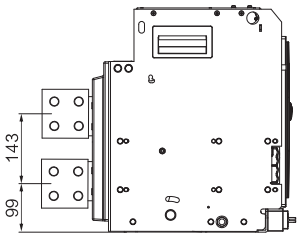

Current spec.	a
2900, 3200, 3600, 3900, 4000	30

TEW5 Series Air Circuit Breaker

TEW5-6300/4P drawer type

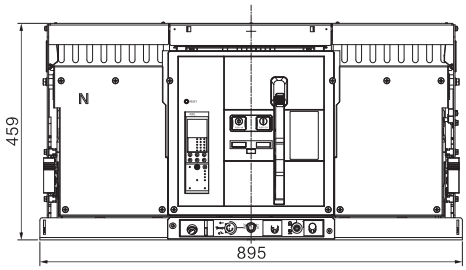

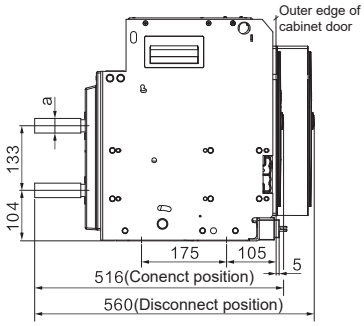

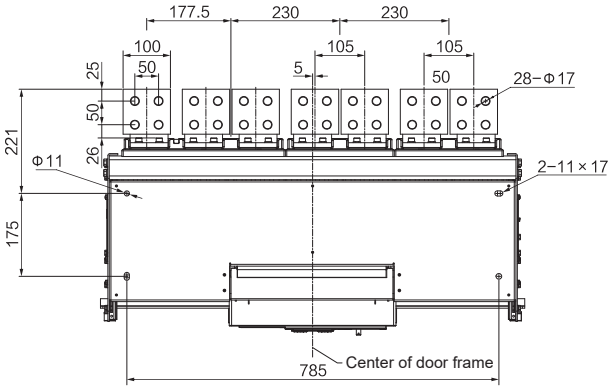

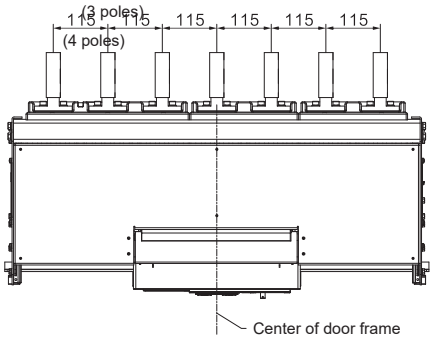

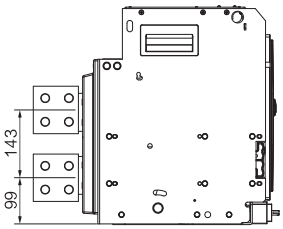

Vertical connection

Current spec.	a
2900, 3200, 3600, 3900, 4000	30

TEW5 Series Air Circuit Breaker

TEW5-6300/3P fixed type

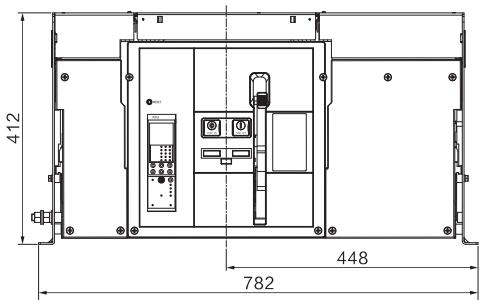

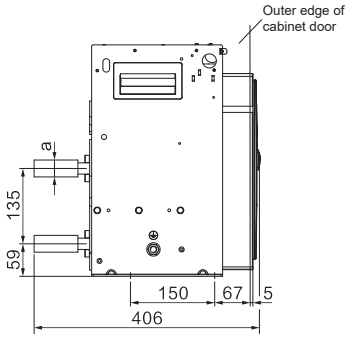

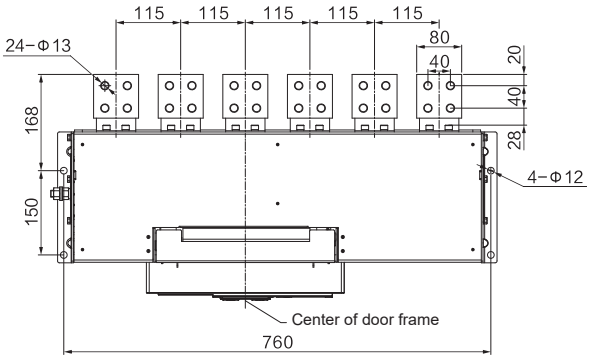

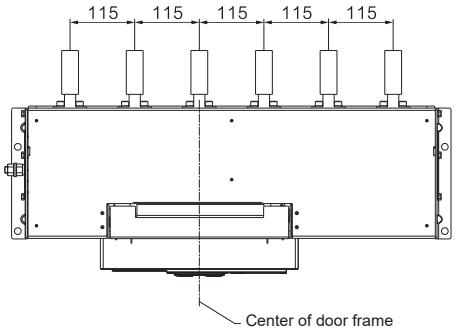

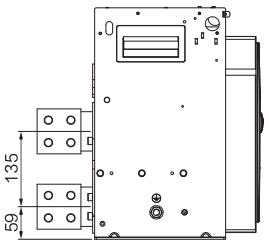

Vertical connection

Current spec.	a
4000	20
4900, 5000, 5900, 6300	30

TEW5 Series Air Circuit Breaker

TEW5-6300/4P fixed type

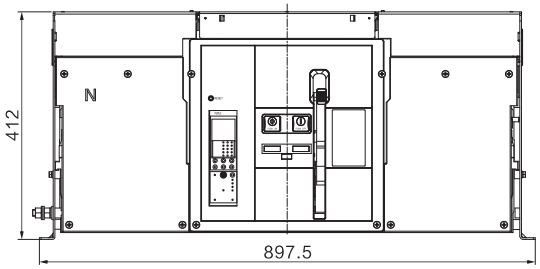

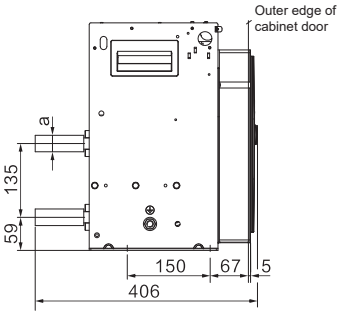

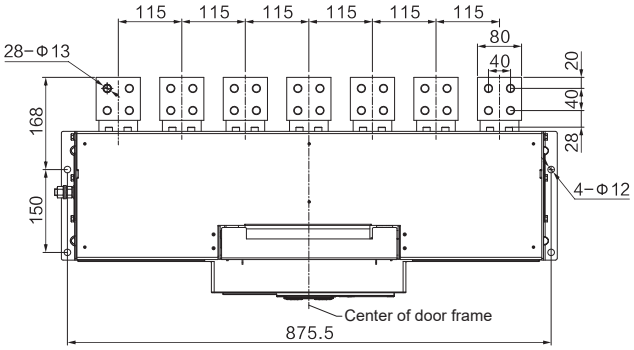

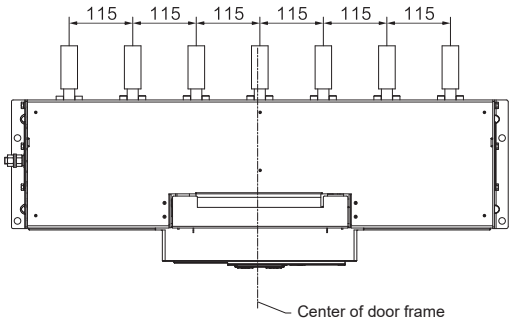

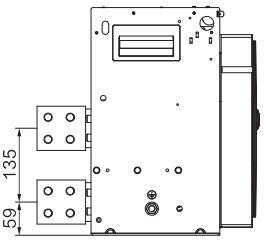

Vertical connection

Current spec.	a
4000	20
4900, 5000, 5900, 6300	30

TEW5 Series Air Circuit Breaker

TEW5-6300 Door frame hole size

Fixed type

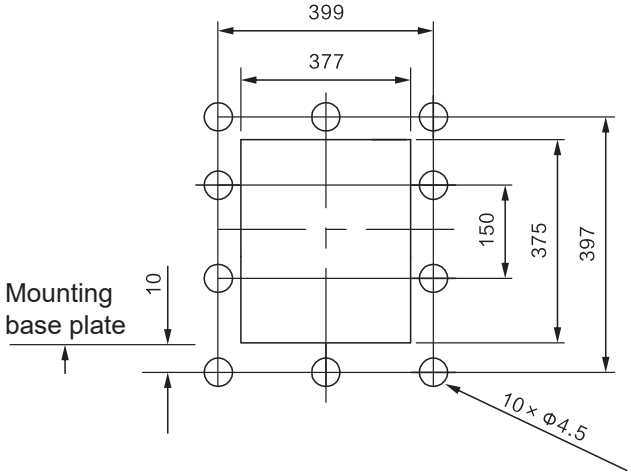

Drawer type

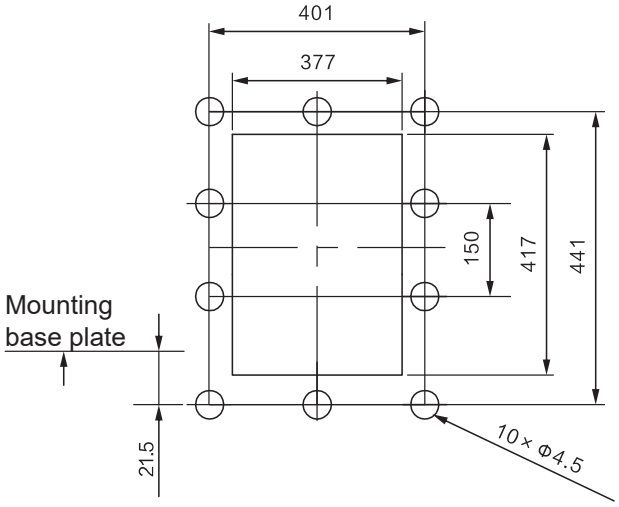

TEW5 Series Air Circuit Breaker

9 Safety Distance

Max. safety distance between the circuit breaker and the cabinet when the circuit breaker is installed in the cabinet

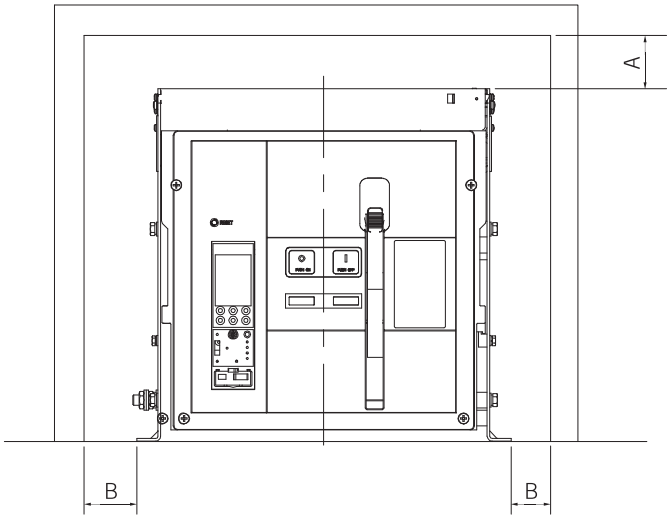

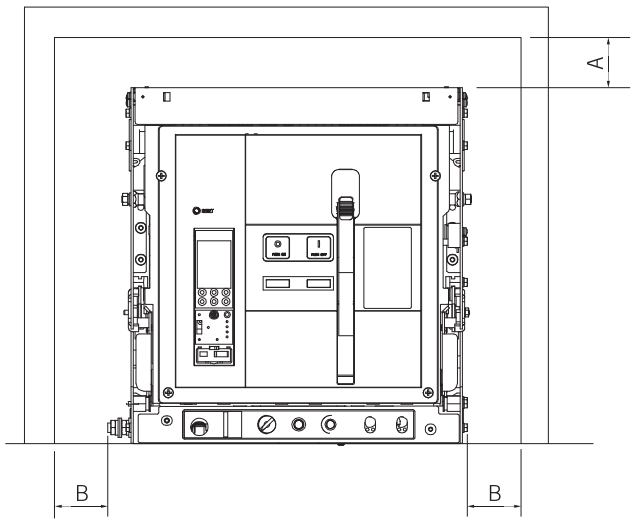

Circuit breaker installation method	To insulator		To metal body	
	A	B	A	B
Drawer type (mm)	0	0	0	0
Fixed type (mm)	0	30	0	70

TEW5 Series Air Circuit Breaker

10 Electrical Diagram

10.1 TEW5-1600-3H controller secondary wiring diagram

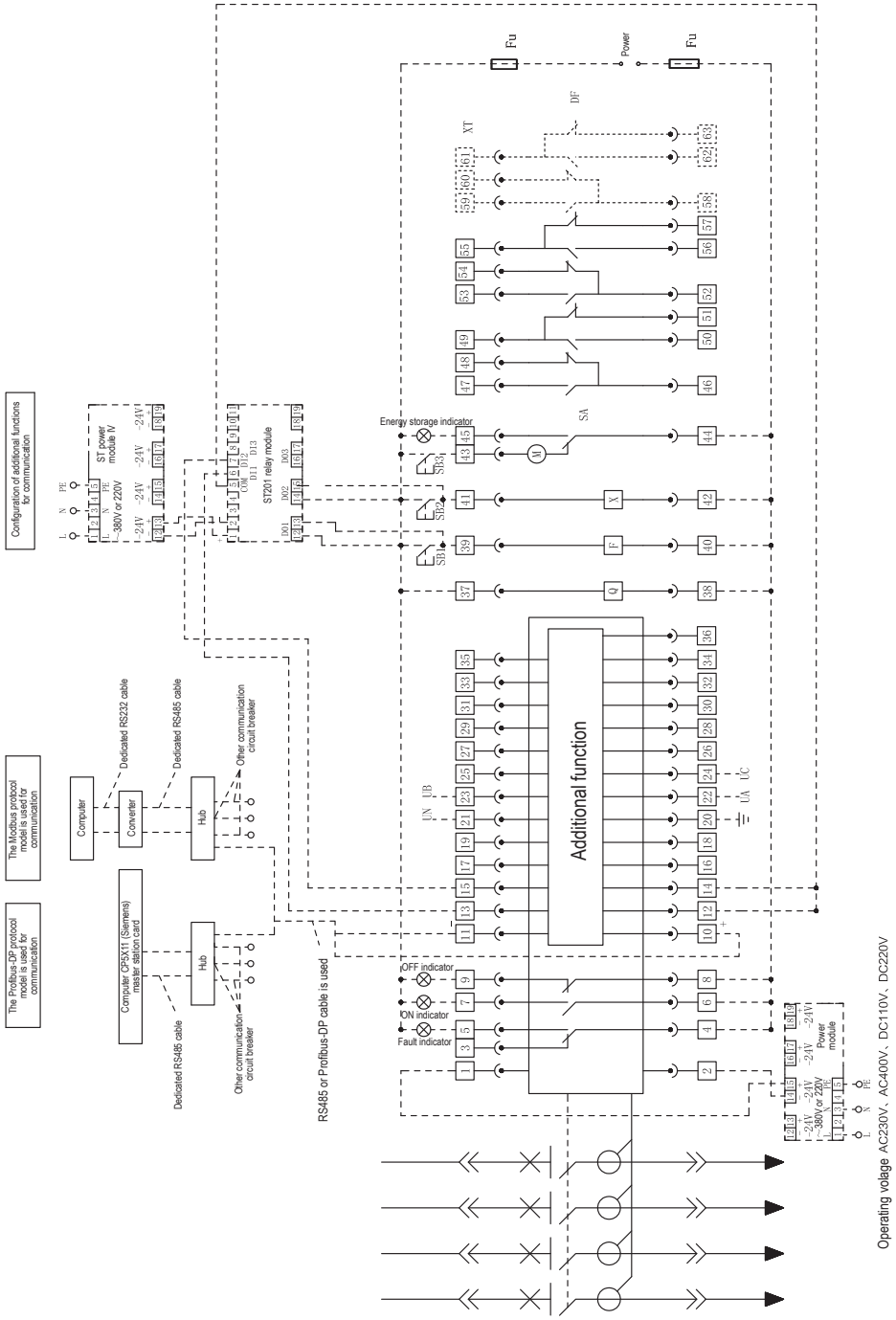

TEW5 Series Air Circuit Breaker

10.2 TEW5-1600-3M/M controller secondary wiring diagram

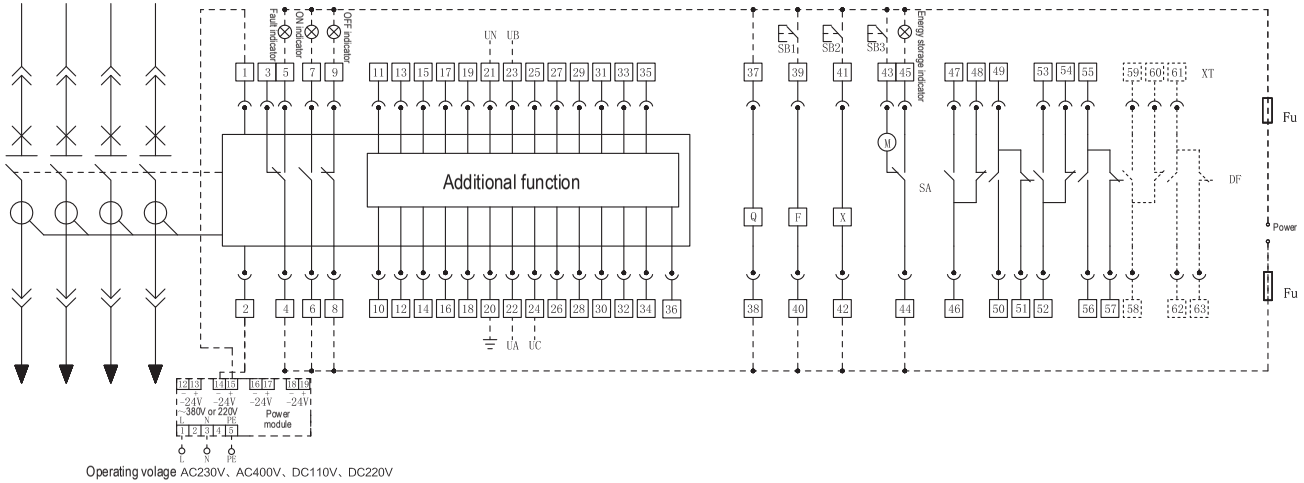

Operating volage AC230V、AC400V、DC110V、DC220V

● Power Input

1#, 2#: As there are multiple optional operating power supplies for controller, please check whether the input power supply type is consistent with the operating power type of the controller, otherwise the controller will be damaged.

● Fault trip aux. contact

3#, 4#, 5#: Fault trip contact output (four pins are common ends), contact capacity: AC250V, 16A

● Aux. contact synchronized with the circuit breaker

6#, 7#: Closing indicating contact output, contact capacity: AC250V, 16A

8#, 9#: Opening indicating contact output, contact capacity: AC250V, 16A

● Communication output

10#, 11#: Communication interface output, three communication protocol output modes are same.

12#、13#、14#、15#:

13# (DO1) remote opening output, 15# (DO2) remote closing output, 12#, 14# opening and closing common ends.

● Programmable input/output interface

16#~19#: Do: DC110V 0.5A, AC250V, 5A.

16#, 17#: Programmable output contact 4 (DO4)

18#, 19#: Programmable output contact 5 (DO5)

● Regional interlock

31#, 32#, 33#, 34#:

31#, 32#(DO3) ZSI output,

33#, 34# (DI1)ZSI input DC24V.

33# is positive and 34# is negative.

● Protective earthing

20#: It is the earth wire of the controller

● Voltage signal input

21#-24#: The pin is the input end of the voltage signal; check the wiring sequence to prevent wrong connection. If this additional function is unavailable, the pin is empty.

● External transformer input

25#, 26#: When the earthing protection is of the 3P+N type, the external N phase transformer is connected, and the 25# is positive.

27#, 28#: When the earthing protection is of the earth current type (W type), this pin is connected to the output of the earthing transformer ZT100. When the earthing protection is of the electric leakage type (type E), this pin is connected to the output of the external ZCT1 rectangular transformer.

● Reserved interface for expansion module

35#, 36#: Reserved interface for expansion module; this pin is empty.

Codes and names of all accessories

SB_1: Shunt button	Q: Undervoltage (instantaneous or delay) release
SB_2: Closing button	F: Shunt release
SB_3: Electric energy storage button	X: Closing solenoid
SA: Motor travel switch	M: Energy storage motor
DF: Aux. switch	XT: Terminal block
FU: Fuse (provided by user)	

Notes:

1. Those marked in the dashed box are wired by the user;
2. If the Q, F, X, M and intelligent controller have the different rated voltage, they can be connected to the power supply separately;
3. All indicators, buttons, fuses and relays should be provided by the user.
4. When the additional functions of the function meter are available, please connect the wires according to the voltage sequence to prevent wrong connection.
5. When the power distribution system is a three-phase three-wire system, 21# and 23# are short circuited to UB. For three-phase four-wire system, please connect the wire according to this diagram.
6. 43# pin can be directly connected to the power supply (automatic pre-storage of energy).
7. The Aux. contacts of the conventional configuration are four sets of conversion contacts, and the terminals after 58# are empty.

TEW5 Series Air Circuit Breaker

10.3 TEW5-2500/4000/6300-3H controller secondary wiring diagram

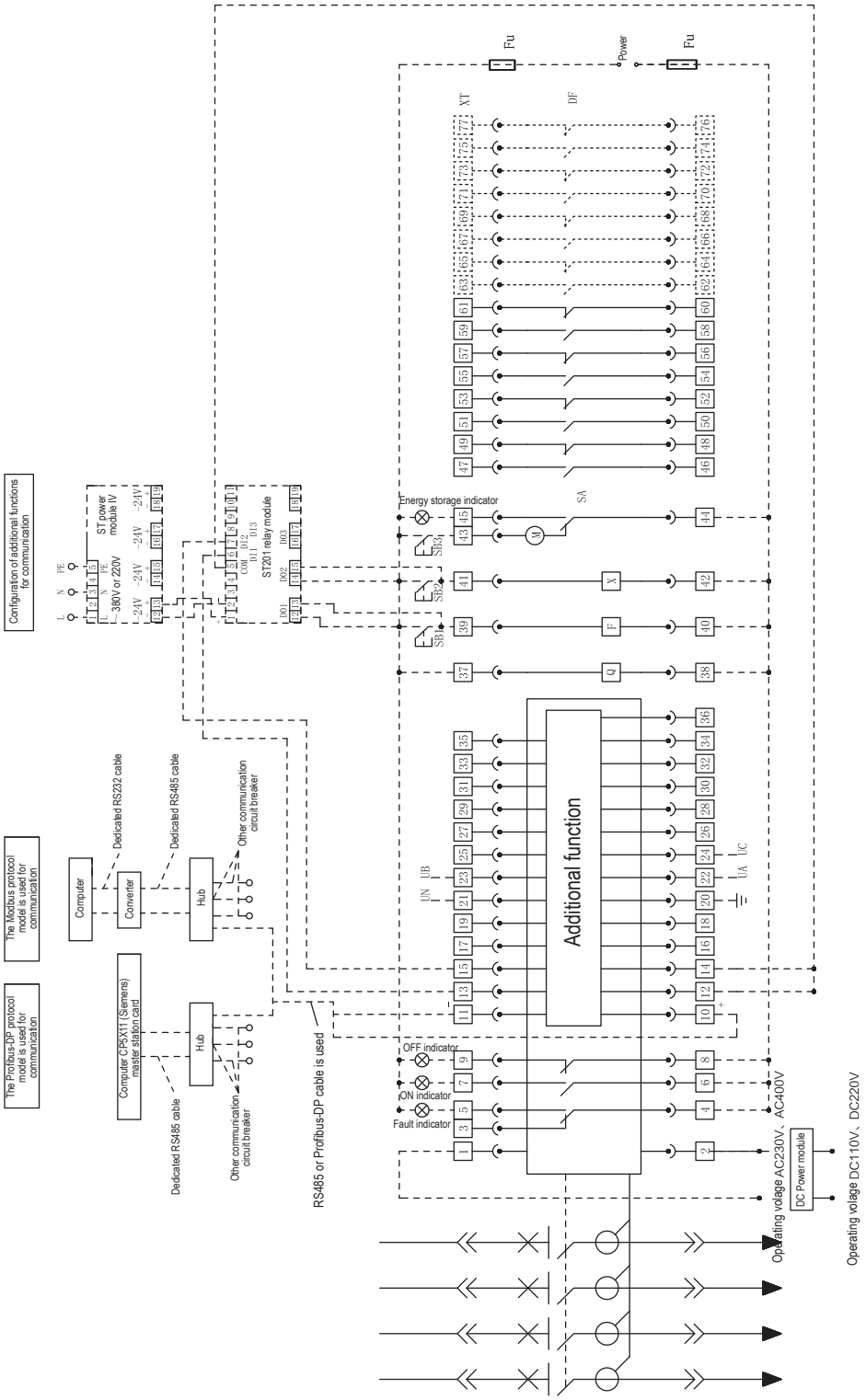

TEW5 Series Air Circuit Breaker

10.4 TEW5-2500/4000/6300-3M/M Controller Secondary Wiring Diagram

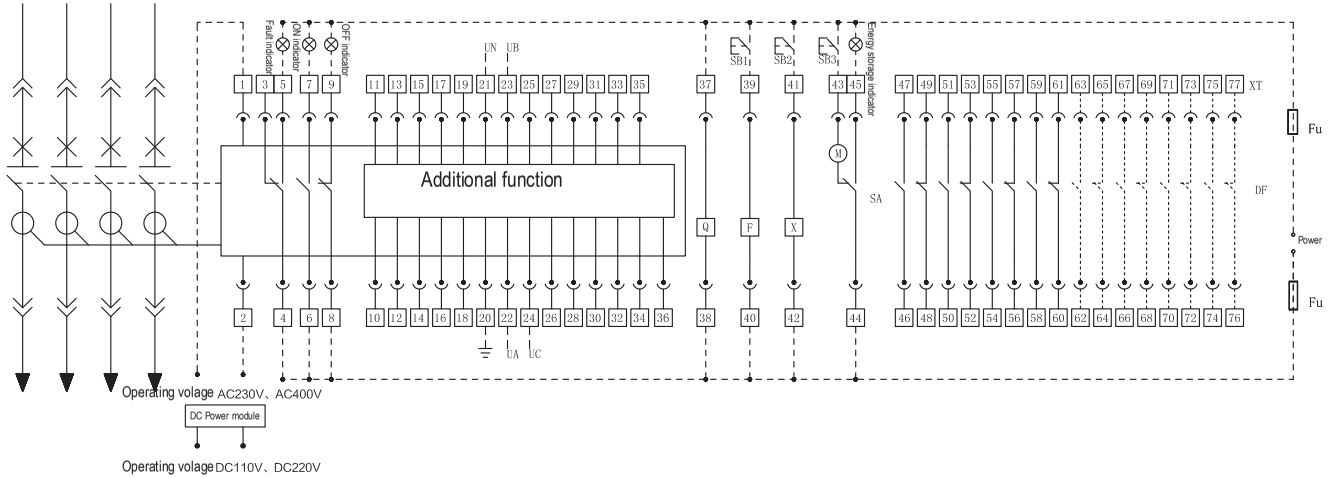

Power Input

1#, 2#: As there are multiple optional operating power supplies for controller, please check whether the input power supply type is consistent with the operating power type of the controller, otherwise the controller will be damaged.

Fault trip aux. contact

3#, 4#, 5#: Fault trip contact output (four pins are common ends), contact capacity: AC250V, 16A

Aux. contact synchronized with the circuit breaker

6#, 7#: Closing indicating contact output, contact capacity: AC250V, 16A

8#, 9#: Opening indicating contact output, contact capacity: AC250V, 16A

Communication output

10#, 11#: Communication interface output, three communication protocol output modes are same.

12#、13#、14#、15#:

13# (DO1) remote opening output, 15# (DO2) remote closing output, 12#, 14# opening and closing common ends.

Programmable input/output interface

16#~19#: Do: DC110V 0.5A, AC250V, 5A.

16#, 17#: Programmable output contact 4 (DO4)

18#, 19#: Programmable output contact 5 (DO5)

Regional interlock

31#, 32#, 33#, 34#:

31#, 32#(DO3) ZSI output,

33#, 34# (DI1) ZSI input DC24V.

33# is positive and 34# is negative.

Protective earthing

20#: It is the earth wire of the controller

Voltage signal input

21#-24#: The pin is the input end of the voltage signal; check the wiring sequence to prevent wrong connection. If this additional function is unavailable, the pin is empty.

External transformer input

25#, 26#: When the earthing protection is of the 3P+N type, the external N phase transformer is connected, and the 25# is positive.

27#, 28#: When the earthing protection is of the earth current type (W type), this pin is connected to the output of the earthing transformer ZT100. When the earthing protection is of the electric leakage type (type E), this pin is connected to the output of the external ZCT1 rectangular transformer.

Remote reset function

29#, 30#: The input of the remote reset function shall be connected to the AC220V power supply, and the circuit is connected to the button switch control in series; if this optional function is unavailable, this pin is empty.

Aux. switch: Ten-open and ten-closed is customized, this terminal number is occupied, and the corresponding function of the original terminal number is unavailable.

Reserved interface for expansion module

35#, 36#: Reserved interface for expansion module; this pin is empty.

Codes and names of all accessories

SB_1: Shunt button	Q: Undervoltage (instantaneous or delay) release
SB_2: Closing button	F: Shunt release
SB_3: Electric energy storage button	X: Closing solenoid
SA: Motor travel switch	M: Energy storage motor
DF: Aux. switch	XT: Terminal block
FU: Fuse (provided by user)	

Notes:

1. Those marked in the dashed box are wired by the user;
2. If the Q, F, X, M and intelligent controller have the different rated voltage, they can be connected to the power supply separately;
3. All indicators, buttons, fuses and relays should be provided by the user.
4. When the additional functions of the function meter are available, please connect the wires according to the voltage sequence to prevent wrong connection.
5. When the power distribution system is a three-phase three-wire system, 21# and 23# are short circuited to UB. For three-phase four-wire system, please connect the wire according to this diagram.
6. 43# pin can be directly connected to the power supply (automatic pre-storage of energy).
7. The Aux. contacts of the conventional configuration are four-open and four-closed contacts, and the terminals after 62# are empty.

10.5 Dual power automatic conversion system electrical wiring diagram (2500/4000/6300 frame)

Dual power automatic conversion system AC 230V electrical wiring diagram (mains supply – power generation)

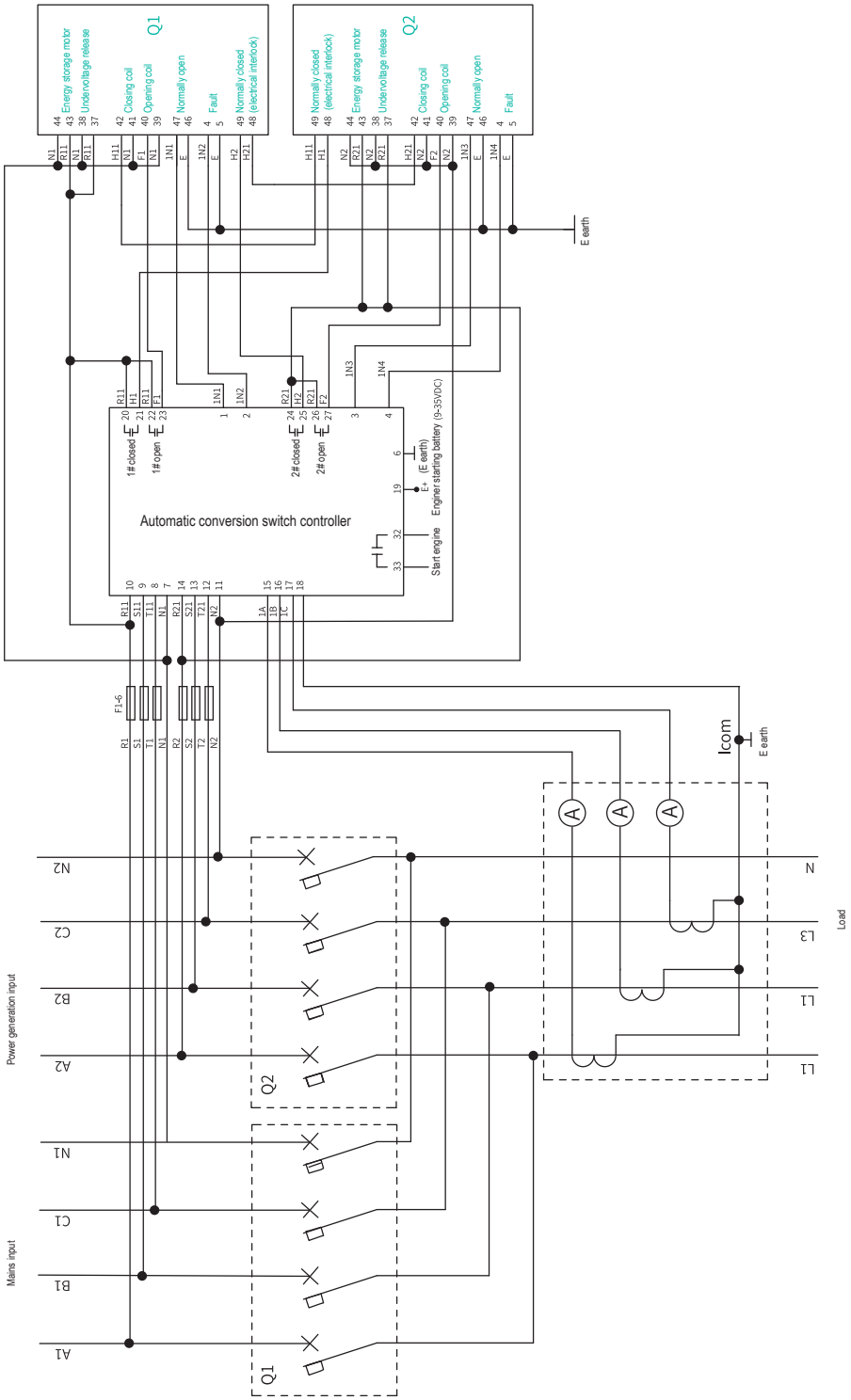

Note: The AC transformer and ammeter marked in the dashed box are connected by the user according to needs, and the reliable connection between the earths is guaranteed.

TEW5 Series Air Circuit Breaker

10.6 Dual power automatic conversion system electrical wiring diagram (2500/4000/6300 frame)

Dual power automatic conversion system AC 380V electrical wiring diagram (mains supply – power generation)

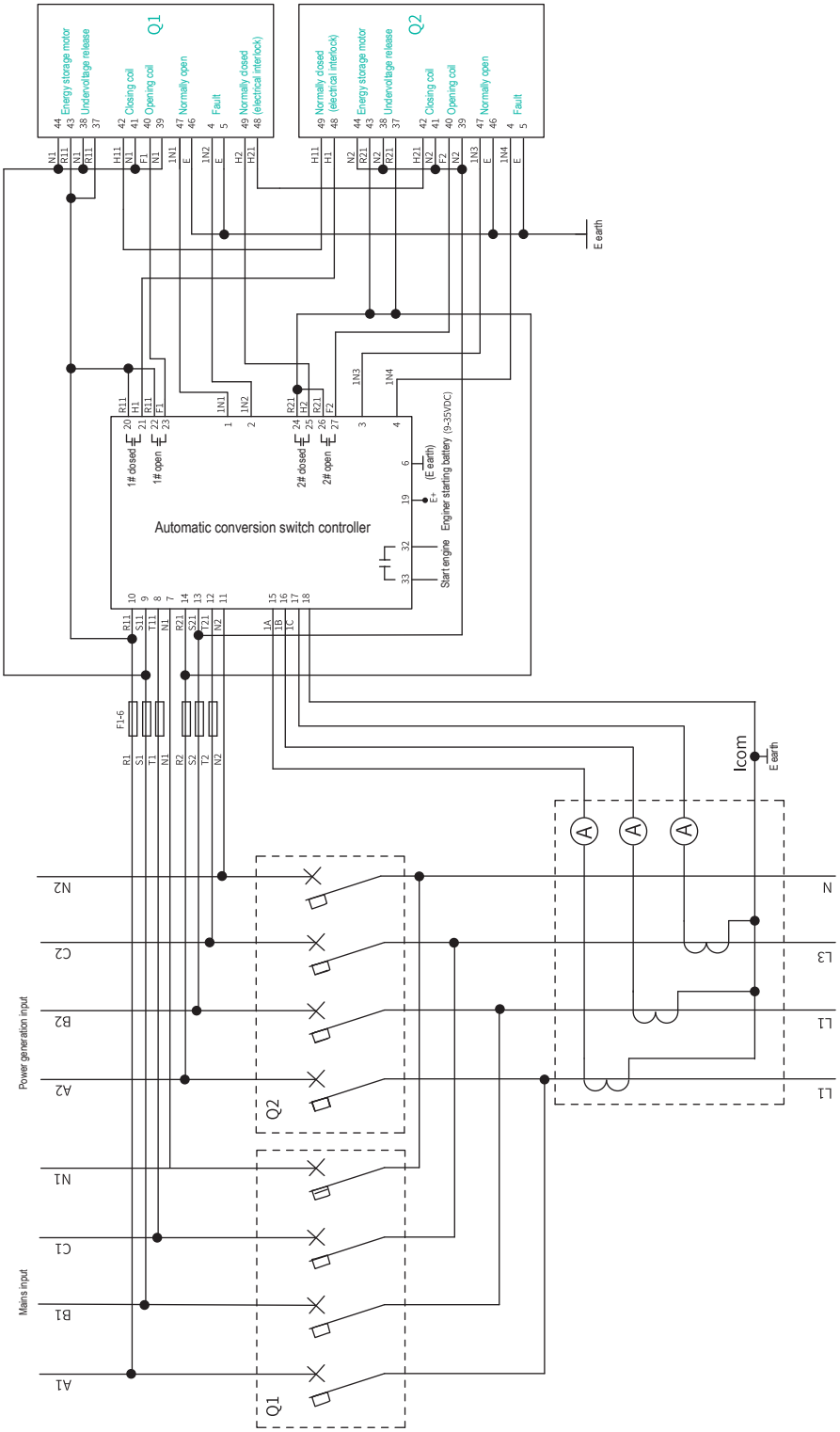

Note: The AC transformer and ammeter marked in the dashed box are connected by the user according to needs, and the reliable connection between the earths is guaranteed.

10.7 Dual power automatic conversion system electrical wiring diagram (1600 frame)

Dual power automatic conversion system AC 230V electrical wiring diagram (mains supply – power generation)

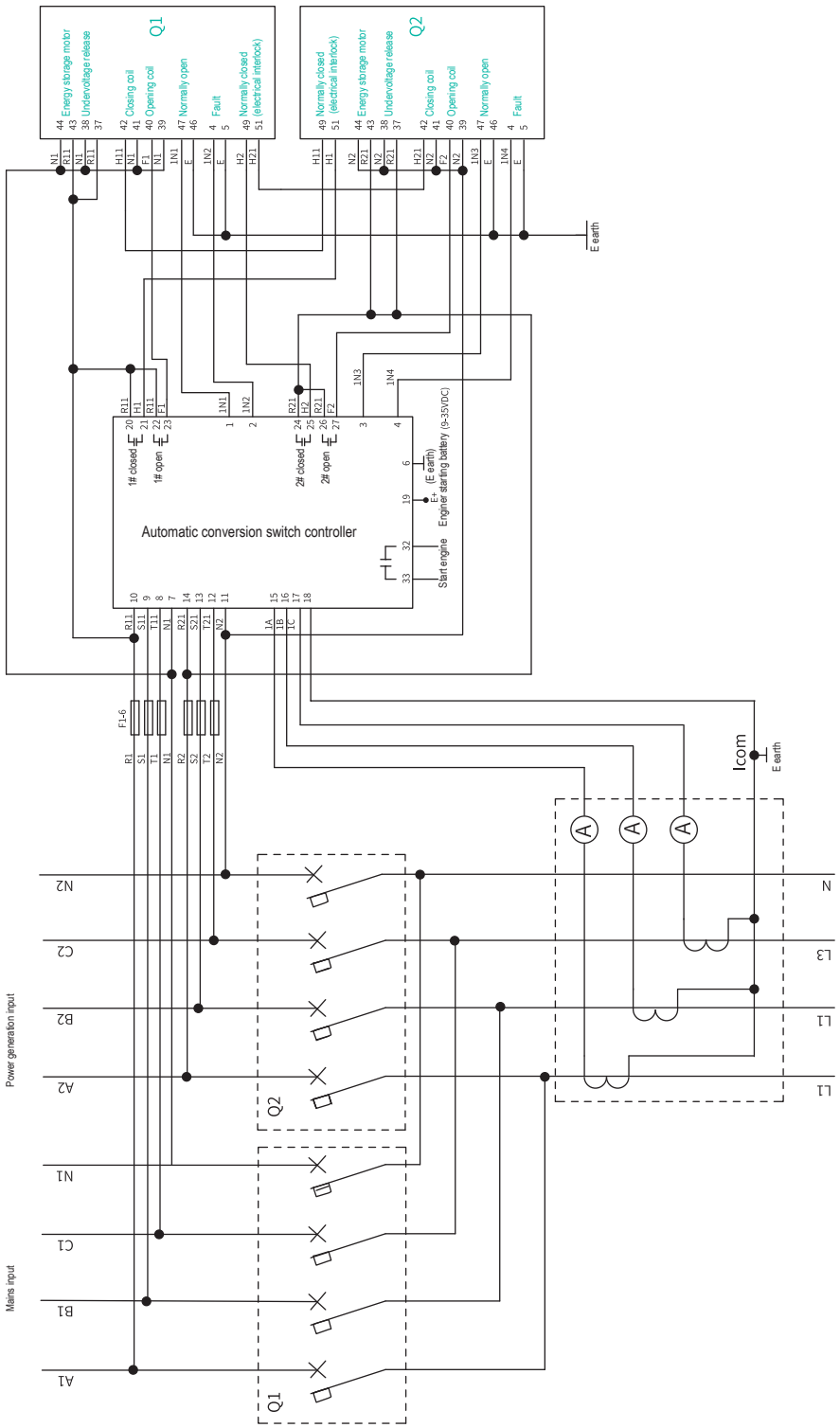

Note: The AC transformer and ammeter marked in the dashed box are connected by the user according to needs, and the reliable connection between the earths is guaranteed.

TEW5 Series Air Circuit Breaker

10.8 Dual power automatic conversion system electrical wiring diagram (1600 frame)

Dual power automatic conversion system AC 380V electrical wiring diagram (mains supply – power generation)

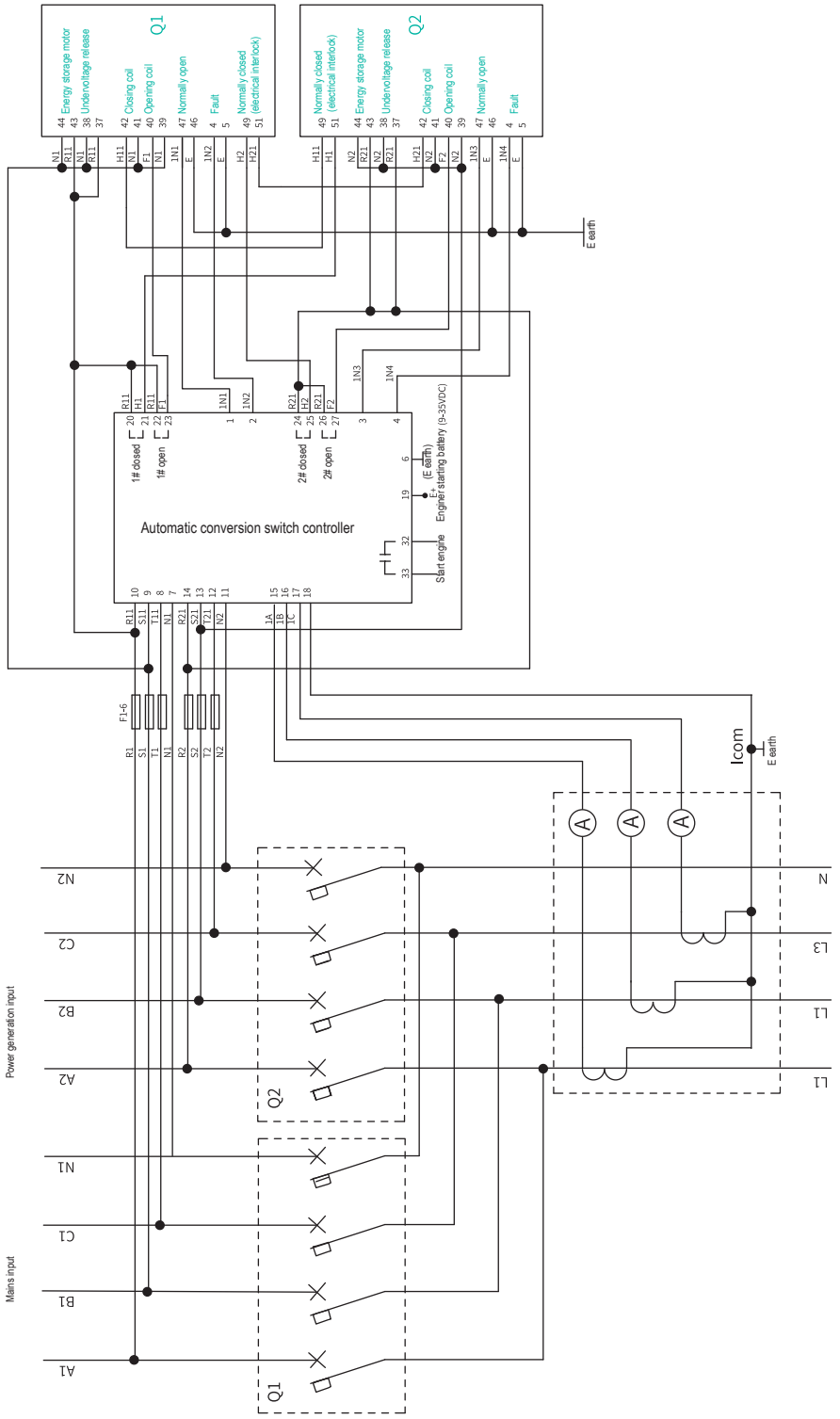

Note: The AC transformer and ammeter marked in the dashed box are connected by the user according to needs, and the reliable connection between the earths is guaranteed.

10.9 TEW5-1600 Busbar Controller Electrical Wiring Diagram

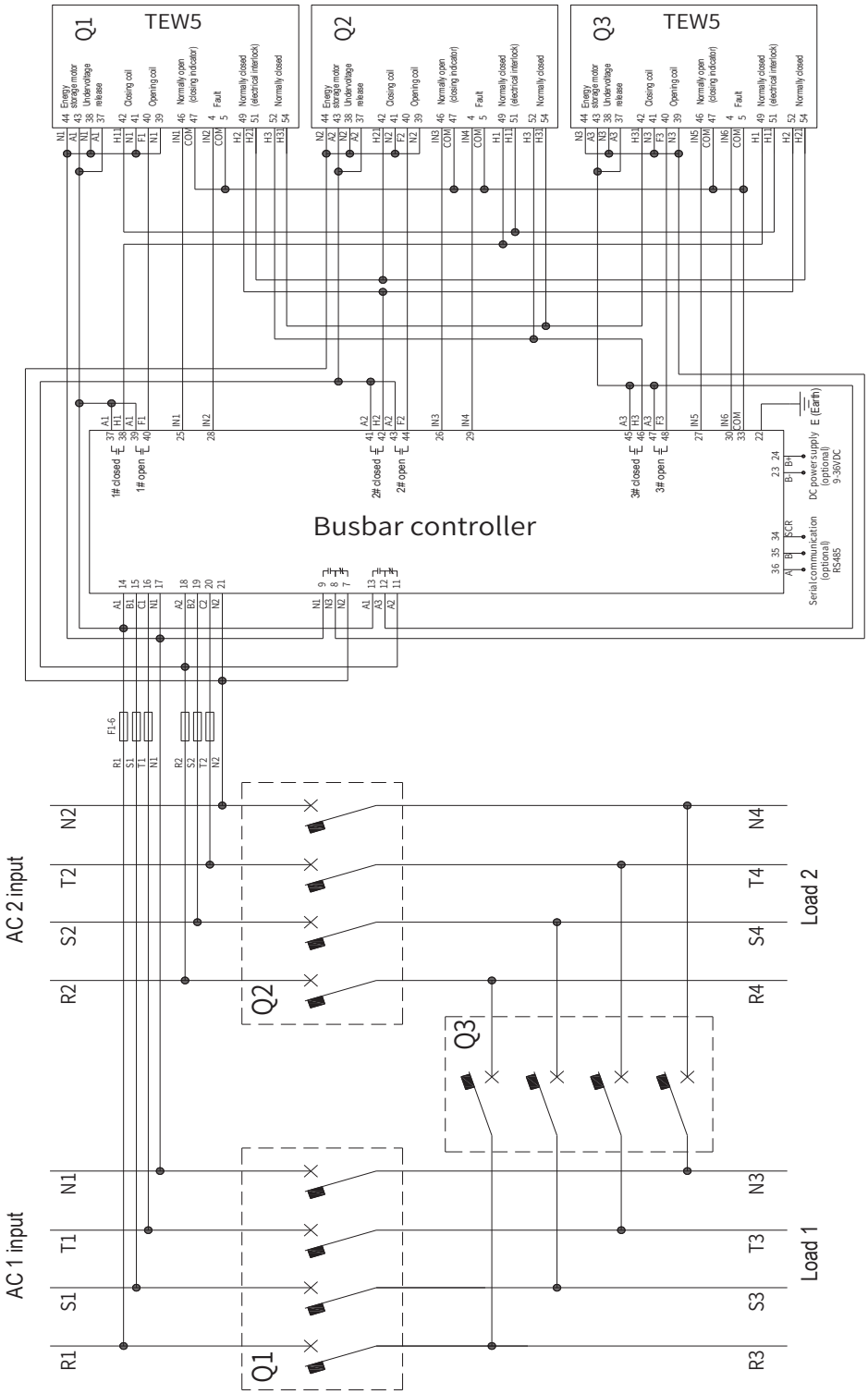

TEW5 Series Air Circuit Breaker

10.10 TEW5-2500/4000/6300 Busbar Controller Electrical Wiring Diagram

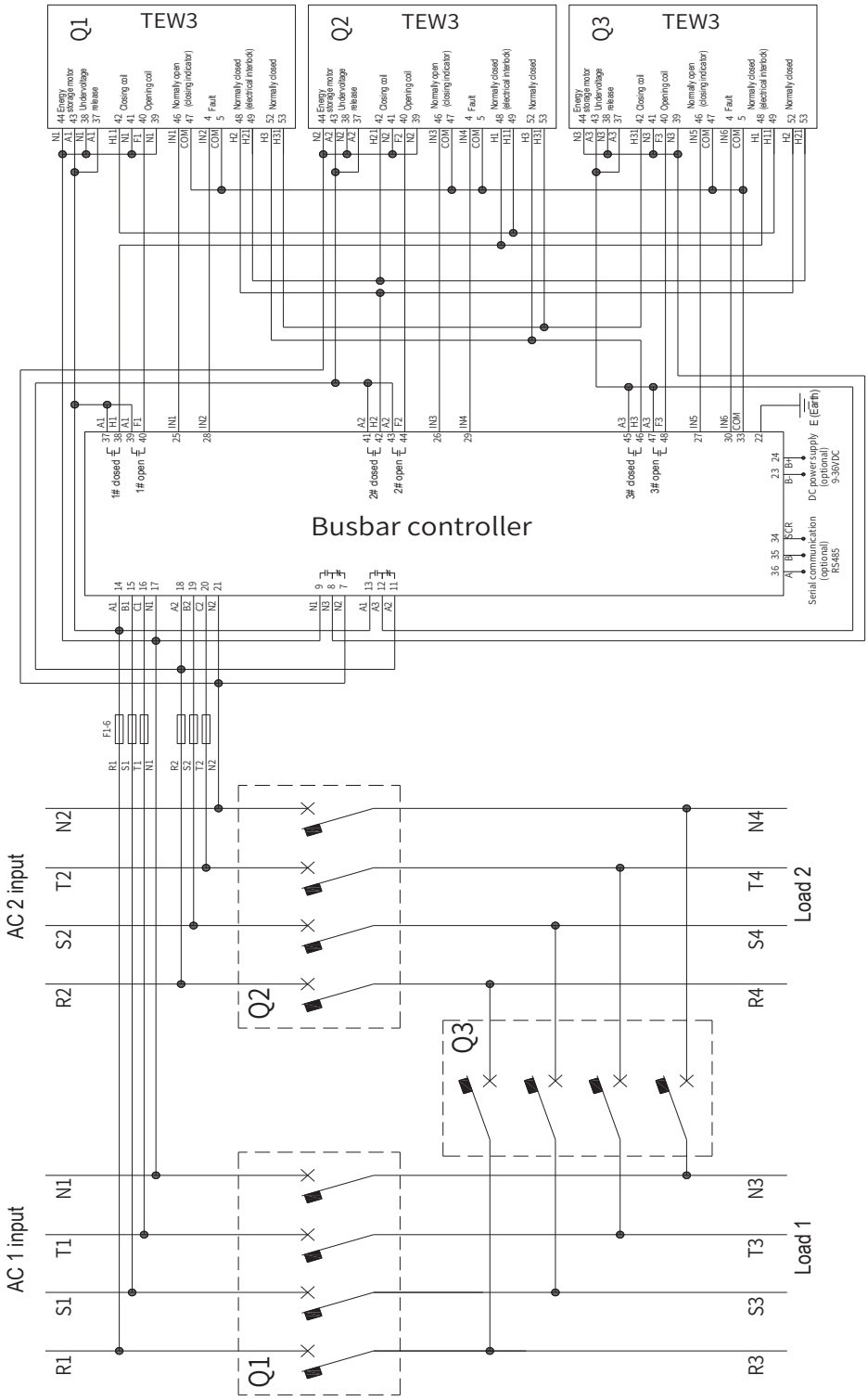

TEW5 Series Air Circuit Breaker

11 Order Specification

User unit			Order qty.	Order time
Model & Spec.	TEW5- □□□□		□ Fixed type □ Three poles □ Drawer type □ Four poles	□ Rated current In = A
Intelligent controller	Model	Basic function	Optional function	Optional accessories
	□ M type	1.Protection and monitoring function 2. Measurement function 3.Maintenance function 4.Human-machine interface (digital)	□ Vector and earth fault protection □ Current unbalance (phase loss) protection □ Load monitoring □ MCR (making and breaking function) □ HCISC (out-of-limit trip function) □ Remote reset □ Contact wear measurement □ Voltage detection closing contact output	□ DC power module ST-I (the aux. power supply used for the controller is DCII0V/DC220V) □ ST Power Module IV (supply the power for ST201 relay module) □ N-phase external transformer □ ZCT1 Leakage transformer (for E-type earthing mode) □ ZTI00 Earthing leakage transformer (for W-type earthing mode) □ ST201 relay module One of the following communication protocols can be added for Type H: □ Modbus communication protocol □ Profibus-DP communication protocol
	□ 3M type	1.Protection and monitoring function 2.Measurement function 3.Maintenance function 4.Human-machine interface (digital)	□ U □ P □ H □ 3P+N earthing mode (the optional external N phase transformer accessory is required) □ W type earthing mode (the optional ZT100 accessory is required) □ E type earthing mode (the optional ZCT1 accessory is required) □ Regional interlock □ Programmable contact output □ Closing ready signal output □ Controller remote reset function □ Contact temperature measurement function □ USB interface	
	□ 3H type	1.Protection and monitoring function 2.Measurement function 3.Maintenance function 4.Human-machine interface (digital) 5.Communication function 6.Contact output function		
Accessories	□ Current and time setting value		According to the factory setting	
	□ The current and time setting values meet the user requirements (customized by the user according to the actual demands)		1. The overload long delay setting current is A, and the setting time is S 2. The short circuit short delay reverse time setting current is A 3. The short circuit short delay reverse time setting current is A, and the setting time is S 4. The short circuit instantaneous setting current is A 5. The earthing fault setting current is A, and the setting time is S	
	Earthing mode		□ 3PT □ 4PT □ (3P+N)T	
	Electric leakage monitoring mode		□ Three-phase three-wire (external leakage transformer ZCT1) □ Three-phase three-wire (external leakage transformer ZCT1) □ With PE or PEN (external leakage transformer ZT100)	
	Power supply		□ AC220V/230V □ AC380V/400V □ DC110V □ DC24V	
	Shunt release		□ AC220V/230V □ AC380V/400V □ DC110V	
	Closing electromagnet		□ AC220V/230V □ AC380V/400V □ DC110V	
	Motor mechanism		□ AC220V/230V □ AC380V/400V □ DC110V	
	Aux. contact		□ 4a4b((standard) □ 6a6b □ 8a8b □ 10a10b	
	Undervoltage release No-voltage release		□ AC220V/230V □ AC380V/400V □ Self-suction type □ Aid-suction type □ Undervoltage instantaneous release □ No-voltage instantaneous release □ Undervoltage delay release □ Undervoltage delay release □ 1s □ 3s □ 5s □ 10s	
	Mechanical interlock		□ Steel cable interlock □ Lever interlock □ Three-lock two-key □ Two-lock one-key □ One-lock one-key	
	Wiring connection mode		□ Horizontal connection (standard) □ Vertical connection (customzied) □ Vertical connection (customzied)	
Special environment	□ Low temperature □ Plateau □ Coastal			

Notes: 1. If the user has other special requirements for ordering, please contact the manufacturer for negotiation;
2. Unless otherwise specified, the time and current setting values of the controller shall be set according to the factory setting parameters;
3. The standard accessories of the TEW5 series include a four sets of conversion contacts, a shunt release, a closing electromagnet, a phase partition, a door frame, a motor mechanism and a drawer base (no drawer base available for fixed type);
4. TEW5-1600 frame auxiliary switch has up to six sets of conversion contacts;
5. The accessory prices refer to the price book.

TGM1N Series Moulded Case Circuit Breaker

1. Body
2. Mechanical interlock mechanism (optional to customers)
3. Phase partition (standard)
4. Plug-in type (optional to customers)
5. Undervoltage release (optional to customers)
6. Shunt release (optional to customers)
7. Alarm contact (optional to customers)
8. Auxiliary contact (optional to customers)
9. Rotating handle operation (optional to customers)
10. Electric motor operating mechanism (optional to customers)
11. Front-panel connection transition plate (optional to customers)
12. Rear-panel connection (optional to customers)

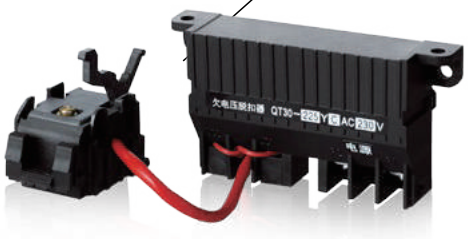

5

6

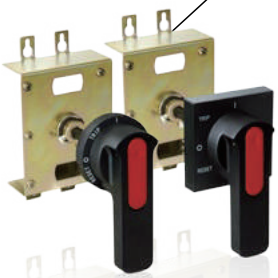

9

10

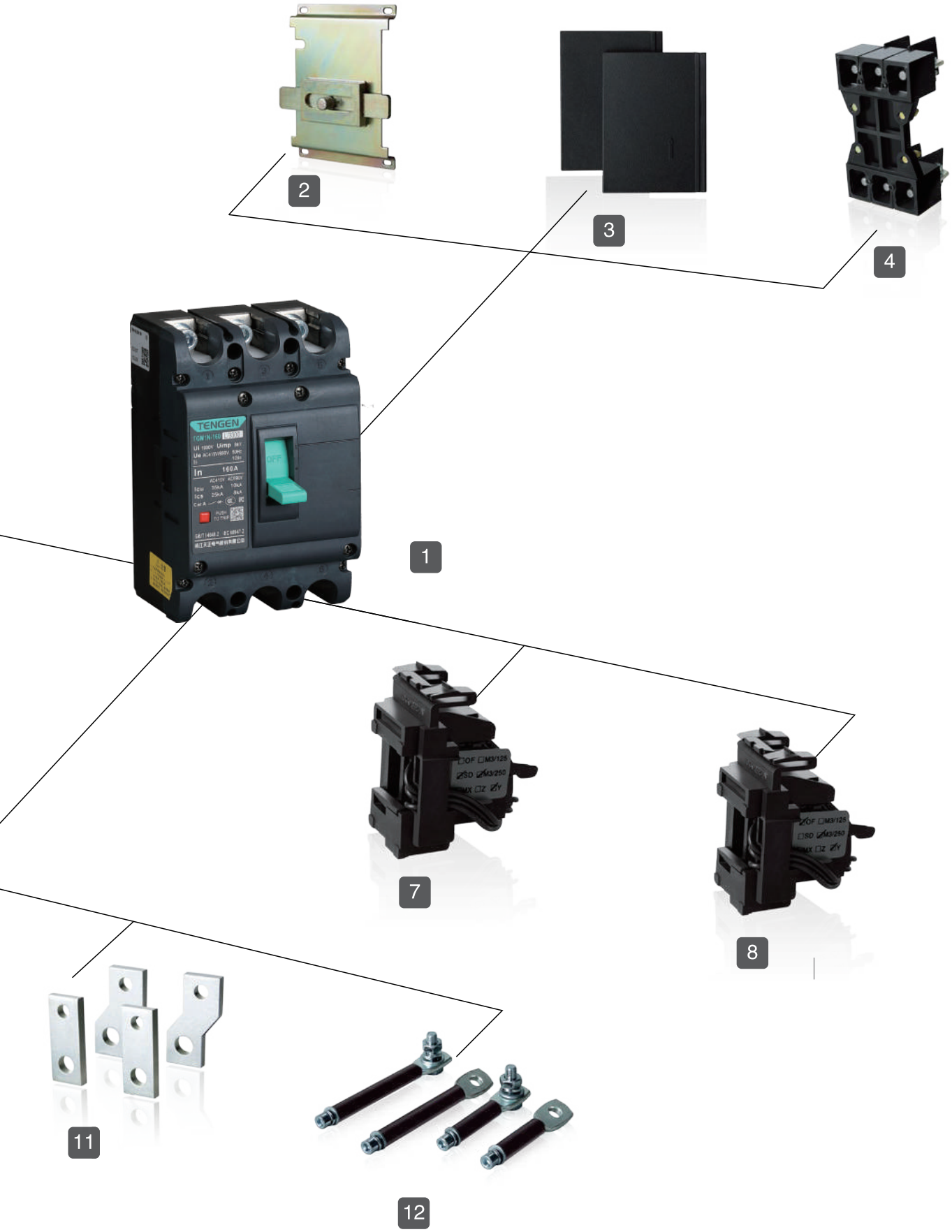
2
3
4
TENGEN
In 160A
1
7
8
11
12

TGM1N Series Moulded Case Circuit Breaker

1 Overview

TGM1N series moulded case circuit breaker is a new type of circuit breaker developed with international advanced technology platform. It is suitable for power distribution protection in AC 50/60Hz, circuits with the rated working voltage ≤ 690V, and can also be used for occasional circuit switch and startup of motor. This product has the advantages of exquisite appearance, compact volume, convenient With maintenance, excellent performance, etc.. It can fully replace the M1 series products in the market due to its excellent performance and high cost performance.

This series circuit breaker is equipped with overload and short circuit protection devices. This series circuit breaker may be installed vertically (i.e., vertical installation) or horizontally (i.e., horizontal installation).

It has disconnecting function, with the corresponding symbol of:

The circuit breaker shall meet the standard IEC 60947-1 and IEC 60947-2

Certificate: CB, CE

2 Type Designation

TG M 1N - □ □ □ / □ □ □ □ □ □ □ □

- Installation mode code: No code: Fixed, front-panel connection; B: Fixed, rear-panel connection; C: Plug-in, rear-panel connection;
- Voltage of accessories
- Rated current
- Additional information: T: Transparent cover, F: Prepaid, III: Overload alarm without tripping
- N pole code: No code : 3P, 2P and 4P circuit breakers (See Table 1)
- Usage code: No code: for Power distribution protection; 2: Motor protection
- Tripper type: 2: Single magnetic type, 3: Thermal-magnetic type (only 3 can be selected for thermal overload alarm without tripping function) and accessory codes (see Table 2)
- Number of poles: 2: 2P; 3: 3P; 3N : three-pole and four-line; 4 : 4P
- Code of operation mode: No code Direct operation with handle,; P: Motor operation; Z: Rotating handle operation (for switch cabinet)
- Breaking capacity level: L type: Standard, M type: Relatively high breaking, H type : High breaking, R type : Current–limit
- Frame current
- Design code
- Moulded case circuit breaker
- Enterprise code

Table 1

Wiring mode		
Type A	N pole is not equipped with over-current tripping element, has been connected with all along, and does not act with other three poles	3N300A
B	N pole is not equipped with over-current tripping element, and acts with other three poles (N-pole turn on prior to turn off)	4300B
Type C	N pole is equipped with over-current tripping element, and acts with other three poles (N-pole turn on prior to turn off)	4300C
Type D	N pole is equipped with over-current tripping element, has been connected with all along, and does not act with other three poles	3N300D

Note: No code for 3-pole products. Type A and Type D are corresponding to 1N and 3N, respectively. 2-pole product and 4-pole product are corresponding to Type B and Type C.

Currently, there is no transparent cover product for 63/125/630 large volume/ 800/1250 frame.

Currently, there is no transparent cover 2P product.

2.1 View of codes of 4-pole product

Type A: N pole is not equipped with over-current tripping element, has been connected with all along, and does not act with other three poles.

Without over-current tripper

Type B: N pole is not equipped with over-current tripping element, and acts with other three poles (N-pole turn on prior to turn off).

Without over-current tripper

TGM1N Series Moulded Case Circuit Breaker

Type C: N pole is equipped with over-current tripping element, and acts with other three poles (N-pole turn on prior to turn off).

With over-current tripper

Type D: N pole is equipped with over-current tripping element, has been connected with all along, and does not act with other three poles.

With over-current tripper

2.2 Table of codes for internal accessories

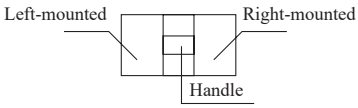

Alarm contact ● Auxiliary contact ○

Shunt release ■ Undervoltage release ▲

Table 2

Accessory Name	Accessory code	TGM1N-63 TGM1N-125	TGM1N-160	TGM1N-250 TGM1N-320	TGM1N-400 TGM1N-630 TGM1N-800	TGM1N-1250	TGM1N-1250 Small volume
		Standard setting	Standard setting	Standard setting	Standard setting	Standard setting	Standard setting
No accessories	00						
Alarm contact	08	●	●	●	●		●
Shunt release	10	■	■	■	■	■	■
Auxiliary contact	20	○	○	○	○	○	○
Undervoltage release	30	▲	▲	▲	▲		▲
Shunt release Auxiliary contact	40	■ ○	■ ○	■ ○	■ ○	○ ■	○ ■
Shunt release Undervoltage release	50	■ ▲	■ ▲	■ ▲	■ ▲		■ ▲
Two sets Auxiliary contact	60	○ ○	○ ○	○ ○	○ ○	○ ○	○ ○
Auxiliary contact Undervoltage release	70	▲ ○	▲ ○	▲ ○	▲ ○		○ ▲
Shunt release Alarm contact	18	■ ●	■ ●	■ ●	■ ●		● ■
Auxiliary contact Alarm contact	28	● ○	● ○	● ○	● ○		● ○
Undervoltage release Alarm contact	38	● ▲	● ▲	● ▲	● ▲		● ▲
Shunt release Auxiliary contact Alarm contact	48	● ○ ■	● ○ ■	● ○ ■	● ○ ■		● ○ ■
Two groups of auxiliary contacts Alarm contact	68	● ○ ○	● ○ ○	● ○ ○	● ○ ○		● ○ ○
Undervoltage release Auxiliary contact Alarm contact	78	● ○ ▲	● ○ ▲	● ○ ▲	● ○ ▲		● ○ ▲

★ Note: Internal accessories shall be installed on left and right. Please specify the installation direction (such as right shunt) of the accessories when ordering. Otherwise, the standard setting shall be adopted. Prepaid shunt is suitable to 160-800 frames.
Transparent cover circuit breakers shall not be equipped with accessories.
A set of auxiliary contacts include 1NO+1NC contact for below 400 type; a set of auxiliary contacts include 2NO+2NC contacts for 400 and above 400 types.

2.3 Applicable frame current of overload alarm without tripping

Frame current	160	250/320	400	630	800
Rated current	16、20、25、32、40、50、60、63、70、75、80、100、125	100、125、140、150、160、170、180、200、225、250	250、280、300、315、320、350、380、400	400、450、500、550、600、630	630、700、800

Remarks: 3P, 3P+N A type and 4P B type can be equipped with overload alarm without tripping accessories (only applicable to L and M types)

TGM1N Series Moulded Case Circuit Breaker

2.4 Feature of overload alarm without tripping

Overload alarm without tripping refers to that the circuit breaker B11-B14 is connected to send alarm signal, but the circuit breaker does not trip when the actual current exceeds the overload tripping current and the circuit breaker reaches the tripping time.

● Working schematic diagram

Normal working status of the circuit breaker　　Overload alarm working status of the circuit breaker

3 Technical Parameters

3.1 Basic parameters

Table 3

Basic parameters																					
Frame current		63				125				160				250				320			
Rated working voltage Ue(V)		AC230/240、AC380/400/415、AC660/690				AC230/240、AC380/400/415、AC660/690				AC230/240、AC380/400/415、AC660/690				AC230/240、AC380/400/415、AC660/690				AC230/240、AC380/400/415、AC660/690			
Rated insulation voltage Ui(V)		800				800				1000				1000				1000			
Rated impulse withstand voltage Uimp(kV)		8				8				8				12				8			
Rated frequency Hz		AC（50/60Hz）																			
Rated current In(A)		10、16、20、25、32、40、50、63				10、16、20、25、32、40、50、63、80、100、125				16、20、25、32、40、50、60、63、70、75、80、100、125、140、150、160				100、125、140、150、160、170、180、200、225、250				100、125、140、150、160、170、180、200、225、250、270、280、300、315、320			
Short-circuit protection setting value Ii		6In、8In、10In、12In																			
Breaking capacity		L	M	H	R	L	M	H	R	L	M	H	R	L	M	H	R	L	M	H	R
Icu	2P:（AC230/240V）（kA）	35	50	/	/	35	50	/	/	50	70	/	/	50	70	/	/	50	70	/	/
	3P/4P:（AC380/400/415V）（kA）	25	35	50	70	25	35	50	70	35	50	70	85	35	50	70	85	35	50	70	85
	3P/4P:（AC660/690V）(kA)	5	5	8	10	5	5	8	10	10	10	10	20	10	10	10	20	10	10	10	20
Ics	2P:（AC230/240V）（kA）	25	35	/	/	25	35	/	/	35	50	/	/	35	50	/	/	35	50	/	/
	3P/4P:（AC380/400/415V）（kA）	18	25	35	50	18	25	35	50	25	35	50	65	25	35	50	65	25	35	50	65
	3P/4P:（AC660/690V）（kA）	5	5	8	10	5	5	8	10	8	8	10	10	8	8	10	10	8	8	10	10
Applicable working ambient temperature		-5℃～+30℃																			
Usage category		A																			
Flashover distance (mm)		≤50				≤50				≤50				≤50				≤50			
Isolating function		With (without for 1P+N, 3P+N)																			
Mechanical life (times)	Without maintenancein	20,000				2,0000				20,000				20,000				20,000			
	With With maintenance	40,000				40,000				40,000				40,000				40,000			
Electrical life (times)		10,000				10,000				10,000				10,000				10,000			
Protection type		Power distribution protection				Power distribution protection				Power distribution protection				Power distribution protection				Power distribution protection			
		Motor protection				Motor protection				Motor protection				Motor protection				Motor protection			
Tripping mode		Thermal magnetic				Thermal magnetic				Thermal magnetic				Thermal magnetic				Thermal magnetic			
		Single-magnetic				Single-magnetic				Single-magnetic				Single-magnetic				Single-magnetic			
Overload alarm without tripping	2P, 4P/C type 4P/D type	-				-				-				-				-			
	3P, 4P/A type 4P/B type	-				-				■				■				■			
Prepayment function		-				-				■				■				■			

TGM1N Series Moulded Case Circuit Breaker

Continued table 3

Basic parameters															
Frame current		400			630			630 large volume		800			1250	1250 small volume	
Rated working voltage Ue (V)		AC380/400/415、AC660/690			AC380/400/415、AC660/690			AC400/415 AC660/690		AC400			AC400	AC400	
Rated insulation voltage Ui (V)		1000			1000			800		800			800	1000	
Rated impulse withstand voltage Uimp(kV)		12			12			8		12			12	8	
Rated frequency Hz		AC（50/60Hz）						AC（50Hz）		AC（50Hz）			AC（50Hz）	AC（50Hz）	
Rated current In(A)		250、280、300、315、320、350、380、400			400、450、500、 550、600、630			400、500、630		630、700、800			1000、1250	630、700、800、1000、1250	
Short-circuit protection setting value Ii		6In、8In、10In、12In											≤800A：10In ≥1000A：7In		
Breaking capacity		L	M	H	L	M	H	L	M	L	M	H	L	M	H
Icu	2P：（AC230/240V）（kA）	/	/	/	/	/	/	/	/	/	/	/	/	/	/
	3P/4P：（AC380/400/415V）（kA）	50	70	100	50	70	100	50	65	50	70	100	80	65	80
	3P/4P：（AC660/690V）（kA）	10	15	20	10	15	20	10	10	15	20	20	/	/	/
Ics	2P：（AC230/240V）（kA）	/	/	/	/	/	/	/	/	/	/	/	/	/	/
	3P/4P：（AC380/400/415V（kA）	35	50	75	35	50	75	35	42	35	50	75	40	50	65
	3P/4P：（AC660/690V）（kA）	10	10	10	10	10	10	5	5	15	15	15	/	/	/
Applicable working ambient temperature		-5℃～+30℃													
Usage category		A													
Flashover distance (mm)		≤100			≤100			≤100		≤100			≤120	≤100	
Isolating function		With (without for 1P+N, 3P+N)													
Mechanical life (times)	Without maintenancein	10,000			10,000			10,000		8,000			5,000	5,000	
	With With maintenance	20,000			20,000			20,000		10,000			5,000	5,000	
Electrical life (times)		8,000			8,000			8,000		5,000			5,000	5,000	
Protection type		Power distribution protection			Power distribution protection			Power distribution protection		Power distribution protection			5,000	5,000	
		Motor protection			Motor protection			Motor protection		Motor protection			/	/	
Tripping mode		Thermal magnetic			Thermal magnetic			Thermal magnetic		Thermal magnetic			Thermal magnetic	Thermal magnetic	
		Single-magnetic			Single-magnetic			Single-magnetic		Single-magnetic			Single-magnetic	Single-magnetic	
Overload alarm without tripping	2P, 4P/C type 4P/D type	-			-			-		-			-	-	
	3P, 4P/A type 4P/B type	■			■			-		■			-	-	
Prepayment function		■			■			■		■			-	-	

Note: The minimum current of TGM1N-63/125H/R is 16A

3.2 Wiring mode

Table 4

Wiring mode										
Frame current	63	125	160	250	320	400	630	630 large volume	800	1250
Fixed, front-panel connection	■	■	■	■	■	■	■	■	■	■
Fixed, rear-panel connection	□	□	□	□	□	□	□	□	□	-
Plug-in rear- panel connection	□	□	□	□	□	□	□	□	□	-
Plug-in front- panel connection	□	□	□	□	□	□	□	□	□	-

TGM1N Series Moulded Case Circuit Breaker

3.3 Accessories optional

Table 5

Accessories information										
Frame current	63	125	160	250	320	400	630	630 Large volume	800	1250
Undervoltage release	□	□	□	□	□	□	□	□	□	-
Shunt release	□	□	□	□	□	□	□	□	□	□
Alarm contact	□	□	□	□	□	□	□	□	□	-
Auxiliary contact	□	□	□	□	□	□	□	□	□	□
Mechanical interlock	□	□	□	□	□	□	□	-	□	-
Terminals of transition bar	□	□	□	□	□	□	□	□	□	-
Electric motor operating mechanism	□	□	□	□	□	□	□	□	□	□
Circular extended rotating handle	□	□	□	□	□	□	□	□	□	-
Phase partition	■	■	■	■	■	■	■	■	■	■
Special for prepayment ammeter	□	□	□	□	□	□	□	□	□	-

□ represents optional represents ■ represents standard represents

3.4 Tripping characteristics of the product

Table 6

Tripper Rated Current (A)	Thermal tripper (reference temperature +30℃)		Action current for the electromagnetic tripper (A)	Remarks
	1.05In (Cold state) No-action time (h)	1.3In (thermal state) Action time (h)		
10≤In≤63	≥1	＜ 1	6In±20%、8In±20%、10In±20%	Power distribution type
63≤In≤800	≥2	＜ 2		
10≤In≤800	1.0In (cold state) no-action time (h)	1.2In (thermal state) action time (h)	12In±20%	Motor protection type
	≥2	＜ 2		

* Note: Thermal state refers to the state after the conventional non-tripping current reaches the specified time;

The features of instantaneous action below 40A shall be set according that at 40A.

3.5 Time/current characteristic curve of TGM1N

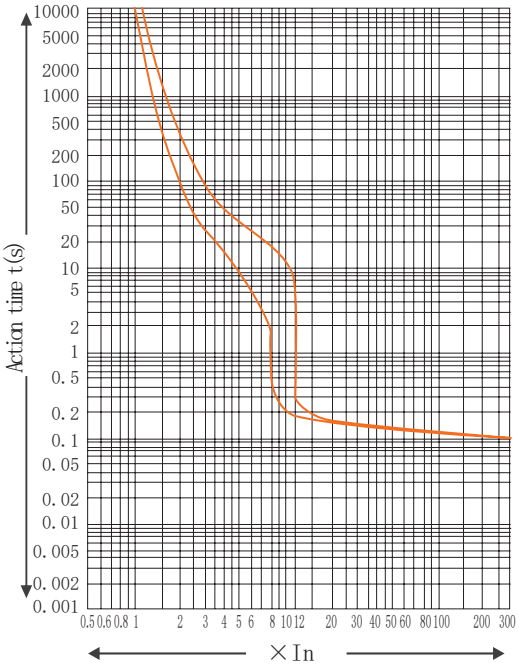

TGM1N Series Moulded Case Circuit Breaker

3.6 Breaker Power Loss Reference Table

Table 7

Model	Current	Single-pole resistance (mΩ)	Total power loss (W) of 3/4 poles		
			Front panel connection	Rear-panel connection	Plug-in rear-panel connection
(mΩ)	63	0.75	24	27	28
TGM1N-125	125	0.72	28	31	32
TGM1N-160	160	0.4	60	87	89
TGM1N-250	250	0.2	63	90	90
TGM1N-320	320	0.19	65	95	98
TGM1N-400	400	0.15	115	120	125
TGM1N-630	630	0.14	180	190	200
TGM1N-800	800	0.11	200	230	290
TGM1N-1250	1250	0.04	260	/	/

3.7 Cross-section area of the copper lead connected to the product

Table 8

Rated current (A)	10	16 20	25	32	40 50	63	80	100	125	160	180 225	250	315 350	400
Cross-sectional area of DA lead (mm^2)	1.5	2.5	4	6	10	16	25	35	50	70	95	120	185	240

Rated current (A)	Cable		Copper bar	
	Quantity	Cross-section area (mm^2)	Quantity	Cross-section area (mm^2)
500	2	150	2	30x5
630	2	185	2	40x5
800	2	240	2	50x5
1250	—	—	2	40x10
1250 Small volume	—	—	2	45x16

3.8 Screw tightening torque of the product

Table 9

Model	TGM1N-63/125	TGM1N-160	TGM1N-250/320	TGM1N-400/630	TGM1N-630Large volume/800	TGM1N-1250	TGM1N-1250 Small volume
Nominal diameter of thread (mm)	M8	M8	M8	M10	M12	M12	M10
Tightening torque (N.m)	8	10	12	22	28	30	22

3.9 Correction factors used in high attitude area

3.9.1 When the altitude is < 2,000 meters, it has no significant effect on the product performance.

3.9.2 When the altitude is >2,000 meters, air cooling effect and decrease of rated impulse withstand voltage shall be considered. Therefore, the manufacturer shall negotiate with users for design or use.

3.9.3 The following table is the table of electrical performance correction factor of the circuit breaker at the altitude >2,000 meters.

Table 10

Altitude (m)	2000	3000	4000	5000
Working current correction factor	1In	0.94In	0.88In	0.85In
Insulation voltage (V)	1Ue	0.8Ue	0.7Ue	0.6Ue
Power frequency withstand voltage (V)	0.3Uimp	0.25Uimp	0.2Uimp	0.18Uimp

TGM1N Series Moulded Case Circuit Breaker

3.10 Ambient temperature correction factor

3.10.1 When it is used at the normal working ambient temperature(-5°C-+30°C), it has no effect on product performance.

3.10.2 When working ambient temperature is >30°C- or < -5°C-, the tripping characteristics and temperature rise of the product will be affected by ambient temperature. Therefore, the manufacturer shall negotiate with users for design or use.

3.10.3 The following table is the table of correction factors of the circuit breaker at different ambient temperatures.

Table 11

Model	30°C	35°C	40°C	45°C	50°C	55°C	60°C	65°C	70°C
TGM1N-63	1In	0.97In	0.95In	0.91In	0.9In	0.89In	0.85In	0.83In	0.75In
TGM1N-125	1In	0.95In	0.94In	0.93In	0.92In	0.91In	0.89In	0.86In	0.79In
TGM1N-160	1In	0.95In	0.94In	0.93In	0.92In	0.91In	0.89In	0.87In	0.84In
TGM1N-250	1In	0.95In	0.9In	0.89In	0.85In	0.81In	0.78In	0.76In	0.74In
TGM1N-320	1In	0.95In	0.9In	0.89In	0.85In	0.81In	0.78In	0.76In	0.74In
TGM1N-400	1In	0.95In	0.9In	0.89In	0.85In	0.81In	0.78In	0.76In	0.73In
TGM1N-630	1In	0.95In	0.94In	0.92In	0.9In	0.87In	0.86In	0.81In	0.73In
TGM1N-630Large volume	/	/	1In	0.95In	0.94In	0.92In	0.9In	0.88In	0.86In
TGM1N-800	1In	0.95In	0.93In	0.85In	0.82In	0.8In	0.78In	0.76In	0.74In
TGM1N-1250	1In	0.92In	0.9In	0.88In	0.87In	0.86In	0.85In	0.78In	0.74In

Note: The reference ambient temperature of TGM1N-630 large size and TGM1N-1250 Small volume is +40°C, and of others is +30°C.

4 Operating Conditions

4.1 Ambient temperature

4.1.1 Normal working temperature is -5°C- +30°C, working temperature limit is -40°C - +70°C.

4.1.2 Derate according to the sample requirements when the temperature is <-5°C or > +30°C (see Table 11 for details).

4.2 Installation category

4.2.1 It is category-III for the main circuit and category- II for remaining auxiliary circuits.

4.3 Pollution degree: 3

4.4 Altitude: 2,000 meters, derating according to the sample requirements when above 2,000 meters (see Table 10 for details).

4.5 Atmospheric conditions

4.5.1 The relative humidity is not more than 50% when the ambient temperature is +40°C;

4.5.2 A higher relative humidity is allowed at the lower temperature.

For example, the relative humidity may be 90% at +20°C. Special measures shall be taken for condensation due to temperature changes.

4.6 Shock and vibration

4.6.1 Withstand mechanical vibration with the frequency of 2Hz-13.2Hz, displacement of ±1mm and mechanical vibration with the frequency of 13.2Hz-100Hz and accelerated velocity of ±0.7g.

TGM1N Series Moulded Case Circuit Breaker

5 Accessories

Moulded case circuit breakers are provided with complete internal and external accessories to meet the demands of different customers.

5.1 Code of internal accessories

Table 12

OF	1N	-	125	L	D	A2
Accessory Code	Code of adapted circuit breaker		Code of frame current	Installation position	Mode of leading wiring out	Voltage grade
OF: auxiliary contact SD: alarm contact MN: undervoltage release MX: shunt release	1N:TGM1N		63, 125, 160, 250, 320, 400, 630, 630 large volume 800, 1250	L: Left side R: Right side	Default: Direct wire lead-out D：Terminal block box	Default: None A1：AC220/230/240V A2：AC380/400/415V D1：DC24V D2：DC110V D3：DC220V

* Note: Internal accessories of TGM1N-63/125H/R type is same as that of TGM1N-160

5.1.1 Auxiliary contact OF

● It is connected to the auxiliary circuit of the circuit breaker, and is used to remotely indicate the ON/OFF/free tripping status of the circuit breaker.

OF 1N - □ □ □ □

- Auxiliary contact code
  1: 1NO+1NC, 2: 2NO+2NC
- Mode of leading wiring out
  Default: Direct wire lead-out *
  D: Terminal block box
- Installation location code: L: Left, R: right
- Frame current
- Code of adapted circuit breaker: 1N: TGM1N
- Accessory code OF: Auxiliary contact

* Note: The length of direct wire lead-out is 50cm by default. For other lengths, please specify when ordering.
For example, Code of the TGM1N-250 right auxiliary contact (with terminal box): OF1N-250RD2.

● Wiring diagram

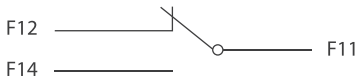

Status of the circuit breaker at “free tripping” and “opening” positions.

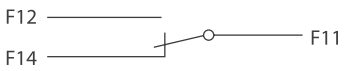

Status of the circuit breaker at “Closing” position.

● Electrical characteristics

Frame current	Inm≤320A		400≤Inm≤800A		Inm ＞ 800A	
Conventional heating current Ith	3A		6A		3A	
Usage category	AC-15	DC-13	AC-15	DC-13	AC-15	DC-13
Rated working current	0.3A	0.15A	1A	0.15A	0.4A	0.15A

TGM1N Series Moulded Case Circuit Breaker

5.1.2 Undervoltage release MN

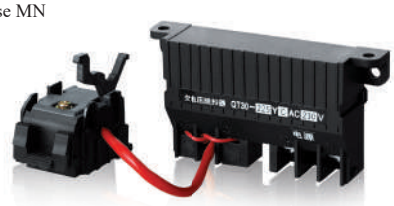

Achieve the undervoltage protection of the circuit breaker. It disconnects the circuit breaker when the power supply voltage is too low, to protect the electrical equipment.

a When the voltage is 35%-70% of the rated working voltage, the undervoltage release shall make the circuit breaker trip reliably.

b When the voltage is 85%-110% of the rated working voltage, the undervoltage release shall ensure the circuit breaker closed reliably.

c When the voltage is below 35% of the undervoltage tripper, the undervoltage release shall prevent the circuit breaker from closing.

* Note: The under-voltage release must be energized first in order to re-buckle and close the circuit breaker, otherwise it will damage the circuit breaker.

MN 1N - □ □ □ □

- Voltage code (codes of international accessories: refer to Table 12, only A1 and A2 are applicable)
- Mode of leading wiring out
  Default: Direct wire lead-out *
  D: terminal block box
- Installation location code L: Left, R: right
- Frame current
- Code of adapted circuit breaker 1N: TGM1N
- Accessory code MN: Undervoltage release

* Note: The length of direct wire lead-out is 50cm by default. For other lengths, please specify when ordering.

For example, Code of left undervoltage release AC220 (direct wire lead-out) of TGM1N-250: MN1N-250LA1.

● Wiring diagram

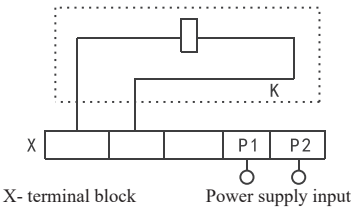

* Note: The internal wiring diagram of the circuit breaker is in the dashed box.

● Electrical characteristics

Model	Starting current value (mA)		Power consumption (W)	
	AC400V	AC230V	AC400V	AC230V
TGM1N-63/125 L/M	9.88	15.25	4.22	3.65
TGM1N-63/125 H/R TGM1N-160	9.95	15.55	4.55	3.82
TGM1N-250/320	10.88	15.83	4.85	3.92
TGM1N-400/630	9.5	11.2	3.8	2.83
TGM1N-800	5.4	7.75	2.7	1.85
TGM1N-1250	5.4	7.75	2.7	1.85

TGM1N Series Moulded Case Circuit Breaker

5.1.3 Alarm contact SD

● It is connected to the auxiliary circuit of the circuit breaker, and is used to indicate that the circuit breaker is at the ON/OFF or trip status.

Under the following four circumstances, the alarm contact will send a trip instruction:

- Overload or short-circuit failure
- Trip of test button
- Residual current failure
- Action of the shunt/undervoltage trip

SD 1N - □ □ □

- Mode of leading wiring out
  Default: Direct wire lead-out *
  D: terminal block box
- Installation location code L: Left, R: right
- Frame current
- Code of adapted circuit breaker 1N: TGM1N
- Accessory code SD: Alarm contact

* Note: The length of direct wire lead-out is 50cm by default. For other lengths, please specify when ordering.
For example, Code of left alarm (direct wire lead-out) of TGM1N - 250: SD1N-250L。

● Wiring diagram

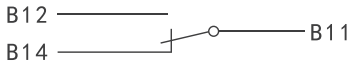

The circuit breaker is at free trip (alarm) status.

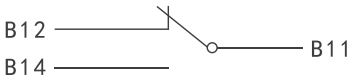

Status of the circuit breaker at “Opening” and “Closing” position.

● Electrical characteristics

Frame current	Inm≤320A		Inm≥400A	
Conventional heating current Ith	3A		6A	
Usage category	AC-15	DC-13	AC-15	DC-13
Rated working current	0.3A	0.15A	1A	0.15A

TGM1N Series Moulded Case Circuit Breaker

5.1.4 Shunt release MX

MX 1N - □ □ □ □

- Voltage code (codes of international accessories: refer to Table 12)
- Mode of leading wiring out
  Default: Direct wire lead-out *
  D: terminal block box
- Installation location code L: Left, R: right
- Frame current
- Code of adapted circuit breaker 1N: TGM1N
- Accessory code MX: Shunt release

● It is used to achieve remote tripping. When the voltage of the circuit breaker is 70%-110% of the rated control supply voltage Us, the shunt tripper shall make the circuit breaker trip reliably.

* Note: The length of direct wire lead-out is 50cm by default. For other lengths, please specify when ordering (the maximum length of the lead is 100mm).

For example, Code of left shunt DC220 (direct wire lead-out) of TGM1N-250: MX1N-250LD3。

● Wiring diagram

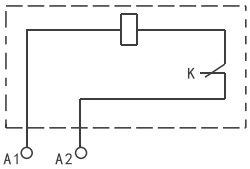

Power supply input

* Note:
K-The micro switch which cascade the shunt release and the coil. The switch is a NC contact; after opening of circuit breaker, the contact is automatically disconnected; the contact is closed when the circuit breaker switching on.

When the control voltage is DC24V, the maximum length of the copper lead shall meet the following requirements and the rated current at the wiring end of the tripper shall reach 5A ± 0.5A:

Wire area / Rated control Power supply voltage Uc (DC24V)	1.5mm²	2.5mm²
100% power supply voltage	150m	250m
85% power supply voltage	100m	160m

If the requirements in the above table are not met, the following figure is recommended for the design of the shunt tripper controller loop:

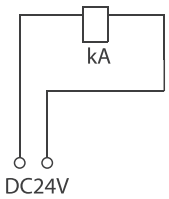

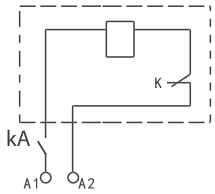

Power supply input

* Note: KA is DC24V intermediate relay, and the contact current capacity is 1A.

● Electrical characteristics

Model	Starting current value (mA)				Power consumption (W)			
	AC400V	AC230V	DC220V	DC24V	AC400V	AC230V	DC220V	DC24V
TGM1N-63/125 L/M	0.32	0.42	0.34	4.22	93.8	70	85.5	86.2
TGM1N-63/125 H/R TGM1N-160	0.35	0.45	0.37	4.52	95.8	73	90.7	91.2
TGM1N-250/320	0.42	0.48	0.39	4.51	112	68.8	90.7	85.3
TGM1N-400/630	0.48	0.51	0.41	4.51	132	78.3	94.4	110
TGM1N-800	0.54	0.85	1.21	5.51	163	153	158	120
TGM1N-1250	0.85	1.31	1.72	5.82	185	173	166	130

TGM1N Series Moulded Case Circuit Breaker

5.2 External accessory code

Table 13

CD2	1N	-	125	A2	
Accessory Code	Code of adapted circuit breaker		Code of frame current	Voltage grade	Code of Number of poles
AH: Circular hand-operated mechanism	1N:TGM1N		63, 125, 160, 250, 320, 400, 630, 630 large volume 800, 1250	A1：AC220/230/240V A2：AC380/400/415V D1：DC24V D2：DC110V DC3:DC220V	2 poles: 2P 3 poles: 3P 4 poles: 4P
RH: Square hand-operated mechanism					
CD2: AD/DC general electric motor operating mechanism					
GP: Front-panel connection transition plate					
GB: Phase partition					
BH: Rear-panel connection					
LS: Mechanical interlock					

* Note: Internal accessories of TGM1N-63/125H/R type is same as that of TGM1N-160

5.2 External accessories

5.2.1 Manual operated mechanism RN/AH

● The circuit breaker is operated by rotating the handle. The rotating handle that meets the ergonomics design makes the operation of circuit breaker more flexibly.

The manual operated mechanisms of TGM1N series circuit breakers can be divided into two types:

Extended rotating handle (circular and square extended hand-operated mechanism)

RH 1N - □

- □ — Frame current
- 1N — Code of adapted circuit breaker 1N: TGM1N
- RH — Accessory Code
  - AH: Circular hand-operated mechanism
  - RH: Square hand-operated mechanism

For example, Code of hand-operated mechanisms of TGM1N -250: AH1N-250。

● Outline dimension of hand-operated mechanism

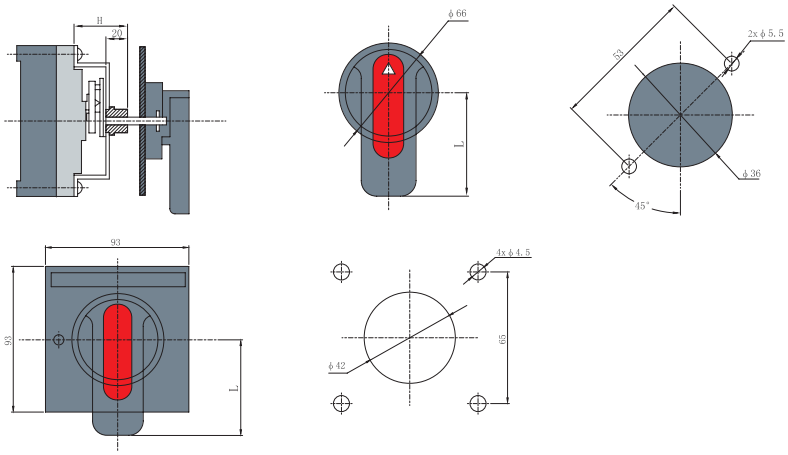

Model and specification	TGM1N-63/125 L/M	TGM1N-160 TGM1N-63/125 H/R	TGM1N-250/320	TGM1N-400/630	TGM1N-630 large volume	TGM1N-800
Installation dimension (H)	58	61	57	87	88	87
Handle length (L)	65	65	95	125	125	125

* Note: The length of the extended bar is 150mm by default and 500mm at maximum (Each 50mm is a specification)

TGM1N Series Moulded Case Circuit Breaker

5.2.2 Electric motor operating mechanism CD2

● Suitable for remote electric closing, opening and re-trip of the circuit breaker as well as automatic control situation.

CD2 1N - □ □

- Voltage code (Codes of external accessories: refer to Table 13)
- Frame current
- Code of adapted circuit breaker 1N: TGM1N
- Accessory code CD2: AC/DC general electric motor operating mechanism

* For example: The code of the electric motor operating mechanism AC380V of TGM1N- 250 is: CD21N-250A2.

● Electrical characteristics and wiring diagram

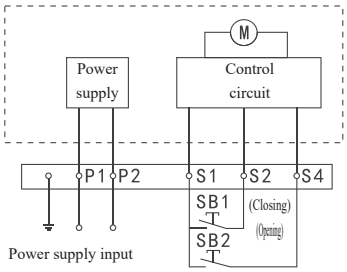

* Note:
K-The micro switch which cascade the shunt release and the coil. The switch is a NC contact; after opening of circuit breaker, the contact is automatically disconnected; the contact is closed when the circuit breaker switching on.

P1 and P2 are external power supply input

SB1 and SB2 are operating buttons (prepared by users)

● Outline and installation dimension

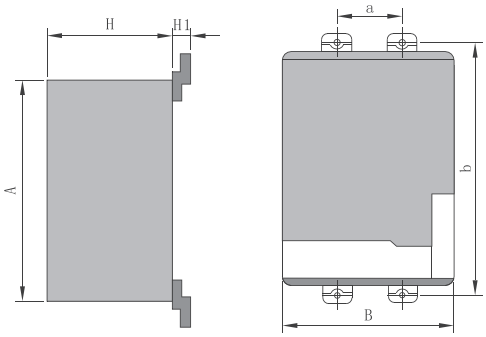

Model	A	B	H	H1	a	b
TGM1N-63/125 L/M	101	73	79	15	25	110
TGM1N-63/125 H/R TGM1N-160	116	90	79	20.5	30	129
TGM1N-250/320	116	90	79	16.5	35	126
TGM1N-400/630	174	130	117	35.5	44	194
TGM1N-630 large volume	174	130	117	28.5	58	200
TGM1N-800	174	130	117	33.5	70	243
TGM1N-1250	174	130	117	35.5	70	300

TGM1N Series Moulded Case Circuit Breaker

5.2.3 Front-panel wiring transition plate GP

GP 1N - □

- Code of Number of poles
  - 2P: 2 poles
  - 3P: 3 poles
  - 4P: 4 poles
- Code of adapted circuit breaker 1N: TGM1N
- Accessory code GP: Front-panel connection transition plate

● It makes the wiring of the circuit breaker more flexible. The phase spacing and safety between circuits can be increased by installing this part.

Note: The code of extension terminal only covers the transition bar of the inlet line or the outlet line (for example, 3P circuit breaker only has 3 terminal boards). If the transition bar is required for inlet line and outlet line, 2 sets shall be ordered.

For example, Code of 3P transition plate of TGM1N-250: GP1N-2503P。

5.2.4 Phase partition GB

GB 1N - □

- Code of Number of poles
  - 2P: 2 poles
  - 3P: 3 poles
  - 4P: 4 poles
- Code of adapted circuit breaker 1N: TGM1N
- Accessory code GB: Phase partition

● The phase partition can enhance the insulation performance of conductors between phases and can be installed from the front slot even after the switch is installed.

* Note: Phase partition is the standard configuration for delivery. The number of phase partition is 2, 4, and 6 for a 2-pole, 3-pole and 4-pole circuit breaker, respectively. For example, Code of 3P phase partition of TGM1N -250: GB1N-2503P.

5.2.5 Rear-panel connection BH

BH 1N - □ □

- Code of Number of poles
  - 2P: 2 poles
  - 3P: 3 poles
  - 4P: 4 poles
- Frame current
- Code of adapted circuit breaker 1N: TGM1N
- Accessory code BH: Rear-panel connection

● It makes the wiring of the circuit breaker more flexible. The rear-board wiring can be achieved with it.

For example, Code of 3P rear-board of TGM1N-250: BH1N-2503P。

TGM1N Series Moulded Case Circuit Breaker

5.2.6 Mechanical interlock LS

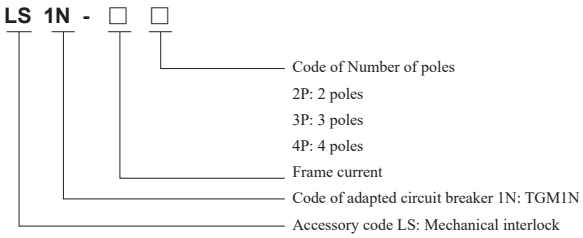

● Interlock two circuit breakers and prevent synchronous closing

For example, Code of 3P mechanical interlock of TGM1N-250: LS1N-2503P。

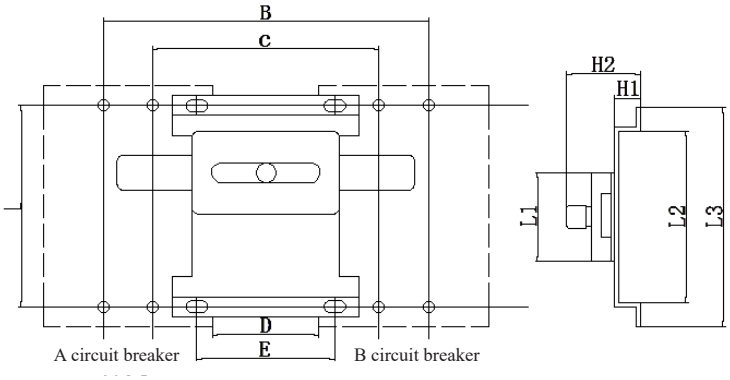

Outline and installation dimension diagram of TGM1N series 3P mechanical interlock

Model and specification	Outline and installation dimension (mm)								
	B	C	D	E	L1	L2	L3	H1	H2
TGM1N-63/125 L/M	130	80	30	80	40	82	106.5	20.5	45
TGM1N-63/125 H/R TGM1N-160	151	91	28.5	36	40	101	122	25	48
TGM1N-250/320	170	100	28	100	40	128	155	25	48
TGM1N-400/630	221.5	133.5	27.5	41	60	179	207	30.5	55
TGM1N-800	320	180	40	52	60	229	254	30.5	55

TGM1N Series Moulded Case Circuit Breaker

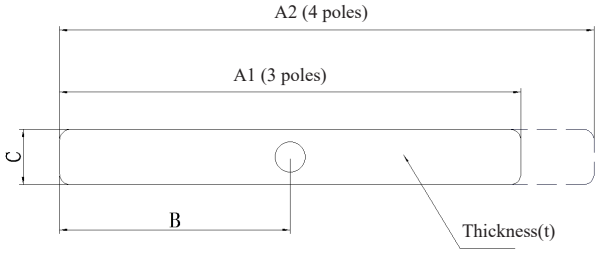

Model and specification	Outline dimension of slip strip (mm)				
	A1	A2	B	C	t
TGM1N-63/125 L/M	120	140	60	22	5
TGM1N-63/125 H/R TGM1N-160	120	152	60	22	5
TGM1N-250/320	130	166	65	22	5
TGM1N-400/630	190	235	96	28	6
TGM1N-800	250	323	125	28	6

6 Outline and Installation Dimensions

6.1 Outline and installation dimension of front-panel connection

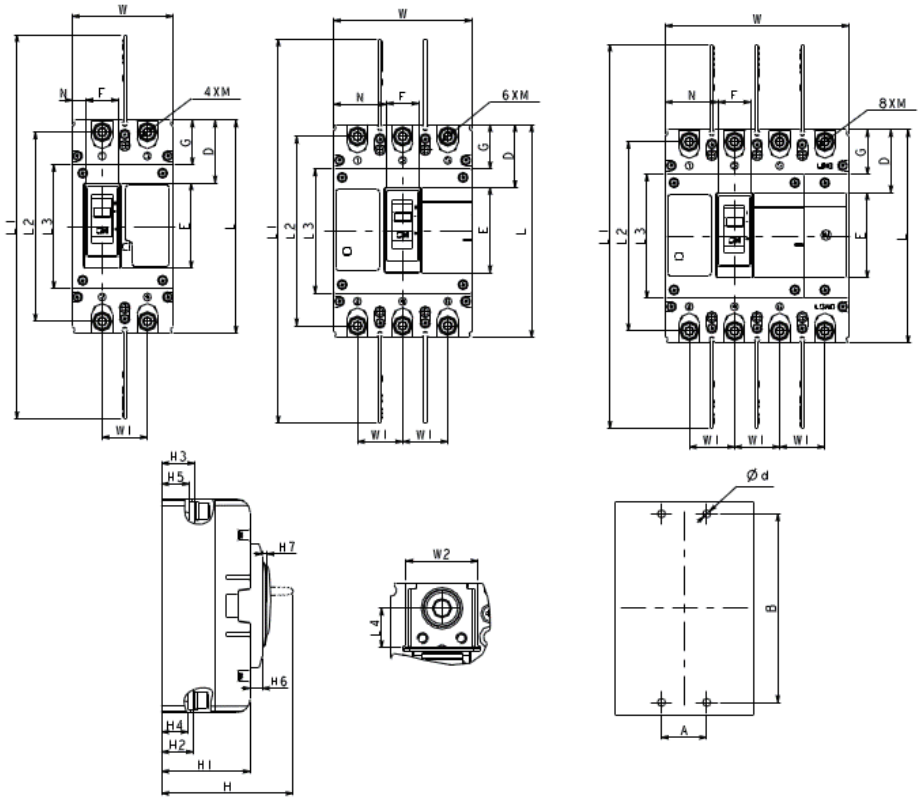

TGM1N Series Moulded Case Circuit Breaker

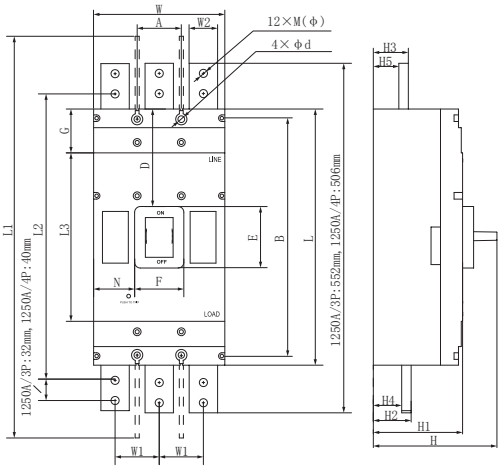

Outline and installation diagram of TGM1N-1250

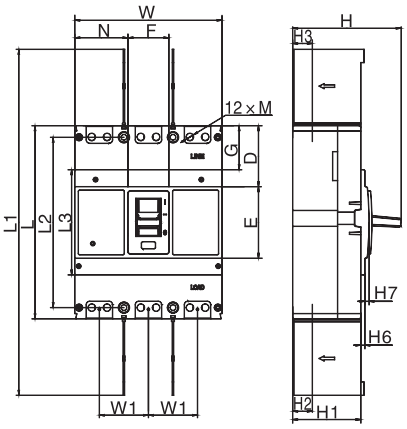

Outline and installation diagram of TGM1N-1250 (small volume)

Table 14

Model	Breaking capacity	Number of poles	Outline dimension (mm)											
			W	L	H	W1	W2	L1	L2	L3	L4	H1	H2	H3
TGM1N-63/125	L/M	2P	50	130	86	25	16	230	115	75	7	58	27	27
	L/M	3P	75	130	85	25	16	230	115	75	7	56	25	25
	H/R		93	151	118	30	17.5	265	132.5	97	7.5	82	28.5	28.5
	L/M	4P	100	130	85	25	16	230	115	75	7	56	25	25
	H/R		123	151	118	30	17.5	265	132.5	97	7.5	82	28.5	28.5
TGM1N-160	L	2P	62	151	100	30	17.5	265	132.5	97	7.5	64	25	25
	M				118							82	28.5	28.5
	L	3P	93		100							64	25	25
	M/H/R				118							82	28.5	28.5
	L	4P	123		100							64	25	25
	M/H/R				118							82	28.5	28.5
TGM1N-250/320	L	2P	78	165	103	35	25.5	300	147	96.5	14	69	24.5	25.5
	M				118							85	22	22
	L	3P	107		103							69	24.5	25.5
	M/H/R				118							85	22	22
	L	4P	142		103							69	24.5	25.5
	M/H/R				118							85	22	22
TGM1N-400	L/M/H	3P	150	257	154	48	32	468	223	156	13.5	102.5	38	38.5
	L/M/H	4P	198											
TGM1N-630	L/M/H	3P	150	257	154	48	32	468	223	156	13.5	102.5	39.5	40.5
	L/M/H	4P	198											
TGM1N-630 large volume	L/M/H	3P	182	270	158	58	40	478	234	155	15	105.5	41	43
	L/M/H	4P	240											
TGM1N-800	L/M/H	3P	210	280	161	70	44	496	243	177	14	110	42	42
	L/M/H	4P	280											
TGM1N-1250	/	3P	210	406	196	70	45	600	453	267	/	142	61	58
		4P	280	330	192	70	50	540	391	/	/	137	57	42
TGM1N-1250 (small volume)	M/H	3P	210	275.5	155	70	45	470	243	150	16	97.5	37	28
		4P	280											

TGM1N Series Moulded Case Circuit Breaker

Continued Table 14

Model	Breaking capacity	Number of poles	Outline dimension (mm)										Installation dimension (mm)		
			H4	H5	H6	H7	E	F	D	G	N	M	A	B	Φd
TGM1N-63/125	L/M	2P	24.5	24.5	10	4.5	44	18	43	27	3	M8	/	112	4
	L/M	3P	22.5	22.5	10	4.5	44	18	43		28	M8	25	112	4
	H/R		25.5	25.5	12	5	69	21	41.5		35.5	M8	30	129	4.5
	L/M	4P	22.5	22.5	10	4.5	44	18	43		28	M8	25	112	4
	H/R		25.5	25.5	12	5	69	21	41.5		35.5	M8	30	129	4.5
TGM1N-160	L	2P	22	22	12	5	69	21	41.5	27	5	M8	/	129	4.5
	M		25.5	25.5											
	L	3P	22	22							35.5		30		
	M/H/R		25.5	25.5											
	L	4P	22	22											
	M/H/R		25.5	25.5											
TGM1N-250/320	L	2P	20.5	21.5	9.5	4	66	24	49	34	11	M8	/	125.4	4.5
	M		18	18											
	L	3P	20.5	21.5							41		35		
	M/H/R		18	18											
	L	4P	20.5	21.5											
	M/H/R		18	18											
TGM1N-400	L/M/H	3P	35.5	34.5	10.5	6.5	111	53	70	50	48	M10	44	194	7
	L/M/H	4P											94		
TGM1N-630	L/M/H	3P	35.5	34.5	10.5	6.5	111	53	70	50	48	M10	44	194	7
	L/M/H	4P											94		
TGM1N-630 large volume	L/M/H	3P	38.5	37	10	7	110	52	80	57	64	M12	58	200	7
	L/M/H	4P													
TGM1N-800	L/M/H	3P	37	36	9	6	105	49	83	51	80	M12	70	243	7
	L/M/H	4P													
TGM1N-1250	/	3P	46	43	/	/	98	78	155	70	65	φ13	70	375	11
			41	26	/	/	100	78	110	/	65	φ13	70	299	9
TGM1N-1250 (small volume)	M/H	3P	/	/	5.8	6	102.5	58.5	86.5	62.5	75.8	M10	70	243	8
		4P													

Remarks: The copper busbar thickness is 10mm for TGM1N-1250/800A, and 15mm for 1000A/1250A.

6.2 Installation dimensions of terminal board

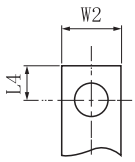

Copper bar

Installation dimensions of TGM1N terminal board (mm)

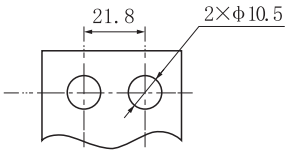

Copper bar

TGM1N-1250 Small volume

Table 15

Model		TGM1N-63/125		TGM1N-160	TGM1N-250/320	TGM1N-400	TGM1N-630	TGM1N-630 Large volume	TGM1N-800	TGM1N-1250 Small volume
Breaking capacity		L/M	H/R	L/M/H/R	L/M/H/R	L/M/H	L/M/H	L/M	L/M/H	M/H
Installation dimension	L4	7	7.5	7.5	10	12	12	15	13	12
	W2	16	16	16	20	28	30	40	40	44

TGM1N Series Moulded Case Circuit Breaker

7 Outline and Installation Dimension of Plug-in Type

7.1 Outline and installation dimensions of plug-in rear-panel connection

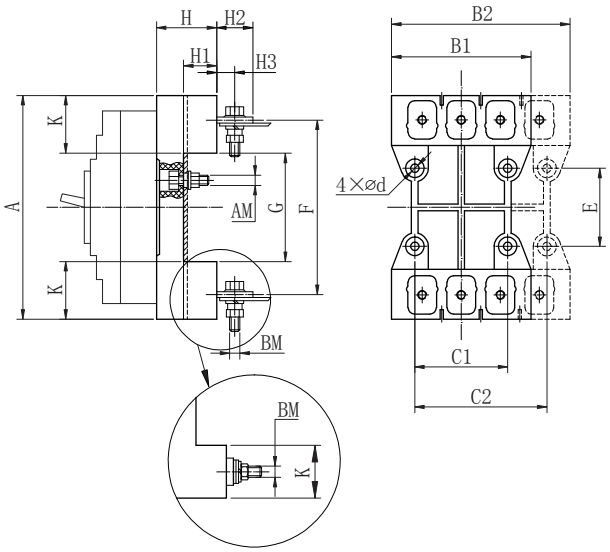

Note: Wiring mode of model 800 is shown as below in the figure

7.2 Hole size of the mounting plate (unit: mm)

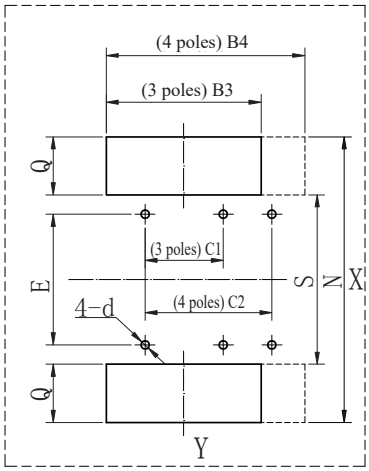

Table 16

Model	Outline and installation dimension (mm)																				
	A	B1	B2	C1	C2	E	F	G	K	H	H1	H2	H3	N	S	Q	B3	B4	AM	BM	4-d
TGM1N-63/125 L/M	133	75	100	50	/	60	114	97	175	28	15	16	9	143	87	28	85	110	M5	M5	φ5.5
TGM1N-63/125 H/R TGM1N-160	168	91	125	60	90	57	132	92	38	50	33	28	19	178	82	48	101	135	M6	M8	φ6.5
TGM1N-250	186	107	145	70	105	54	145	94	46	50	33	37	20	196	84	56	117	155	M6	M8	φ6.5
TGM1N-400 TGM1N-630	280	149	200	60	108	129	224	170	55	60	38	46	24	290	160	65	159	210	M8	M12	φ8.5
TGM1N-630 large volume	300	182	242	100	158	123	234	170	65	60	39	50	/	310	160	75	192	252	M8	M12	φ8.5
TGM1N-800	305	210	280	90	162	146	243	181	62	87	60	22	/	315	171	72	220	290	M10	M14(T)	φ11

TGM1N Series Moulded Case Circuit Breaker

7.3 Outline and installation dimension of plug-in front-panel connection

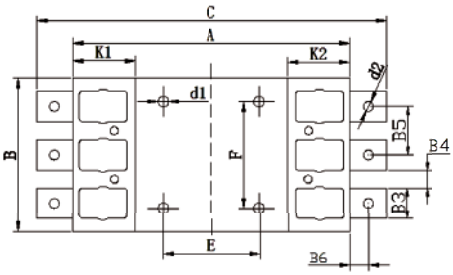

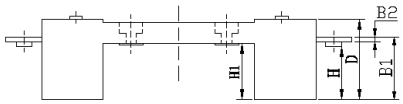

TGM1N-63/125/250/320/630 large volume/800
Outline diagram of plug-in front-panel connection

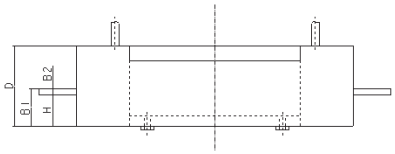

Outline diagram of plug-in front-panel connection of TGM1N-400/630

Table 17

Model	Outline and installation dimension (mm)																	
	A	B	C	D	E	F	H	H1	K1	K2	d1	d2	B1	B2	B3	B4	B5	B6
TGM1N-63/125 L/M	136.5	75.5	188	48	55	50	23	30	22.5	22.5	ø4.5	ø6	25	2	12	13	25	17
TGM1N-63/125 H/R TGM1N-160	172	95.5	214	50	61	66	12.5	35	38	38	ø7	M8	18	3	19	10.5	30.5	10.5
TGM1N-250/320	183	110	259	52	64	70	42	35	44	44	ø7	M10	48	3	22	13	35	22.5
TGM1N-400/630	276	150	351	80	135	115	31	/	/	/	ø7	ø11	37	6	25	22.5	48	22
TGM1N-630 large volume	297	179	397	85	123	100	21	65	64	64	ø8.5	ø13	29	8	35	23	58	34
TGM1N-800	305	210	409	87	144	90	13	61	62	62	ø11	ø13	21	8	35	35	70	35

8 Ordering Notice

8.1 Please fill in relevant information in accordance with the product selection table when ordering.

For example, For ordering 200 sets of TGM1N circuit breakers, with frame current of 250A, breaking capacity of 35kA, 4 poles and B type, shunt AC200V and rated current of 200A, TGM1N-250M/4310B200AAC220V200 sets shall be filled in.

8.2 Product accessories can also be ordered separately and can be selected according to the selection table of internal/external accessories.

For example, For ordering 250 frames, with the accessory voltage of AC380V, and 100 sets of left undervoltage release, please fill in MN1N-250LA2100 sets.

TGM1N Series Moulded Case Circuit Breaker

9 Model Description

9.1 Model Description

TGM1N	– 250	M	Z	/ 4	3	28	2	B	F	250A	AC220V	B	With terminal block box
Model	**Frame current**	**Breaking capacity code**	**Operation mode code**	**Code of pole number**	**Tripping mode**	**Accessory Code**	**Usage code**	**N pole code**	**Additional information**	**Rated current**	**Voltage of accessories**	**Installation mode**	**Special requirements**
TGM1N series moulded case circuit breaker	63:63A 125:125A	63A/125A : L:25kA M:35kA H:50kA R:70kA	No code: Direct operation by hand	2：2 poles	2：Sin-gle-mag-netic type	00: no accessory 08: alarm contact 10: shunt release 20: auxiliary contact	Default: Power distribution protection	A：N pole is always on; N pole is not equipped with over-current tripping element.	Tt：Transparent cover	10~1250A Refer to the comparison table of frame and rated current	AC220/230/240V AC380/400/415V	Default: Fixed, front-panel connection	Default: None
	160:160A 250:250A 320:320A	160A/250A 320A:L :35kA M:50kA H:70kA R:85kA	Z: operation of rotating handle	3：3 poles	3：Thermal magnetic type	30: undervoltage release 40: shunt release+ auxiliary contact 50: shunt release+ undervoltage release 60: two sets of auxiliary contacts	2：Motor protection	B：N pole is always on and is not equipped with over-current tripping element.	F：Prepayment		DC24V DC110V DC220V	B：Rear-panel connection	
	400:400A 630:630A 800:800A	400A/630A 800A: L:50kA M:70kA H:100kA	P: Electric motor operating mecha-nism	3N：3-wire 4-pole		70: auxiliary contact+ undervoltage release 18: shunt release+ alarm contact 28: auxiliary contact+ alarm contact 38: undervoltage release+ alarm contact		C：N pole is always on, and is equipped with over-current tripping element.	III：Overload alarm without tripping			C：Plug-in rear-panel connection	
	1250: 1250A	1250A: L:80kA		4：4 poles		68: two sets of auxiliary contacts+ alarm contact 78: undervoltage release+ auxiliary contact+ alarm contact		D：N pole is always on, and is equipped with over-current tripping element.					
						00-no accessory shall be selected for transparent cover circuit breaker							

TGM1N Series Moulded Case Circuit Breaker

9.2 Selection table of product internal accessories

OF	1N	– 125	L	D	A2
Accessory Code	Code of adapted circuit breaker	Code of frame current	Installation position	Mode of leading wiring out	Voltage grade
OF: Auxiliary contact	1N: TGM1N	63, 125, 160 250, 320	L: Left side	Default: Direct wire lead-out	Default: None A1:AC220/230/240V A2:AC380/400/415V
SD: Alarm contact		400, 630 800, 1250	R: Right side	D: Terminal block box	D1:DC24V D2:DC110V D3:DC220V
MN: Undervoltage release					
MX: Shunt release					

9.3 Selection table of product external accessories

CD2	1N	– 125	A2	Code of pole number
Accessory Code	Code of adapted circuit breaker	Code of frame current	Voltage grade	Code of pole number
AH: Circular hand-operated mechanism	1N: TGM1N	63, 125, 160 250, 320	A1:AC220/230/240V A2:AC380/400/415V	2 poles: 2P
RH: Square hand-operated mechanism		400, 630 800, 1250	D1:DC24V D2:DC110V D3:DC220V	3 poles: 3P
CD2: AC/DC general Electric motor operating mechanism				4 poles: 4P
GP: Front-panel connection transition plate				
GB: Phase partition				
BH: Rear-panel connection				
LS: Mechanical interlock				

TGM1NE Series Moulded Case Circuit Breaker

1. Body
2. Mechanical interlock of mechanism (optional to customers)
3. Phase partition (standard)
4. Plug-in type (optional to customers)
5. Undervoltage release (optional to customers)
6. Shunt release (optional to customers)
7. Alarm contact (optional to customers)
8. Aux. contact (optional to customers)
9. Rotating handle operating mechanism (optional to customers)
10. Electric motor operating mechanism (optional to customers)
11. Front panel connection transition plate (optional to customers)
12. Rear panel connection transition plate (optional to customers)

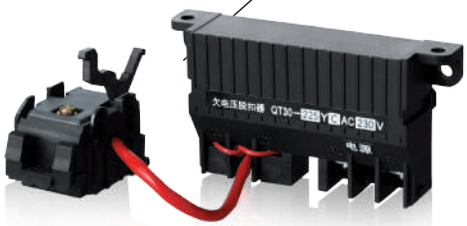

5

6

9

10

2
3
4
TENGEN
1
7
8
11
12

TGM1NE Series Moulded Case Circuit Breaker

1 Overview

TGM1NE Series Moulded Case Circuit Breaker is one of the new circuit breakers researched and developed by us with advanced international technology, featuring with full protection, excellent performance, and compact structure. Circuit breaker is divided into the M type (higher breaking type) and H type (high breaking type) according to its related limit short-circuit breaking capacity Icu, which is an ideal product for power distribution and motor protection. It is suitable for AC 50/60Hz circuit breaker with rated working voltage 690V and below and with setting current ranged 12.5A to 1600A for infrequent conversion of line and for infrequent starts of motor. With the module with additional communication function, the original circuit breaker can be easily upgraded to the communication type circuit breaker. Circuit breaker has functions of overload long time delay, short-circuit short time delay, short-circuit instantaneous, grounding protection, and neutral pole protection. There are optional undervoltage release, shunt release, auxiliary contact, alarm contact, and communication accessories. This series of circuit breaker can be vertically installed (vertical installation) and horizontal installed (lateral installation).

With isolation function with its corresponding symbol. Note: No isolation function for 3P+N.

Standard:

IEC/EN 60947-1 Low-voltage switchgear and controlgear – Part 1: General rules
IEC/EN 60947-2 Low-voltage switchgear and controlgear – Part 2: Circuit breaker

2 Type Designation

TG M 1N E – □□□ / □□□□□□□□□

- Installation method (Note 7)
- Controller function (Note 6)
- Overload alarm non-trip (Note 5)
- Prepaid code (Note 8)
- Code of N-pole (Table 2)
- Usage code (Note 4)
- Release model and accessory code (Table 1)
- Number of poles (Note 3)
- Operating method code (Note 2)
- Breaking capacity (Note 1)
- Frame current (Table 3)
- Electronic type
- Design code
- Moulded case circuit breaker
- Enterprise code

Notes:

1. Breaking capacity: M – Relatively breaking type; H – High breaking type;
2. Operating method code: No code – Direct operation by handle; P –Electric motor operation; Z –Rotating handle;
3. Number of poles: 3-3P; 3N-Three-pole four-wire; 4-4P;
4. Usage code: No code – Power distribution protection; 2 –Motor protection;
5. Overload alarm non-trip code: No code–common type; III –overload alarm non-trip;
6. Controller function code: No code – common four-button; E1 – Neutral pole protection type; E2 – Communication type; E3 – Grounding type;
7. Installation method code: No code– fixed, front panel connection; C – Plug-in rear panel connection; F - Plug-in front panel connection;
8. Prepaid code: No code for common type; F – Prepaid.

TGM1NE Series Moulded Case Circuit Breaker

Release type and accessory code

Table 1

Accessory name	Accessory code
	Electronic release
No accessory	300
Alarm contact	308
Shunt release	310
Aux. contact	320
Undervoltage release	330
Shunt release, Aux. contact	340
Shunt release, Undervoltage release	350
Two sets of Aux. contacts	360
Aux. contacts, Undervoltage release	370
Shunt release, Alarm contact	318
Aux. contact, Alarm contact	328
Undervoltage release, Alarm contact	338
Shunt release, Aux. contact, Alarm contact	348
Two sets of aux. contacts, alarm contact	368
Aux. contact, Undervoltage release, Alarm contact	378

Code of N-Pole

Table 2

Code	Description
A	No overcurrent release element is mounted on the N-pole, and the N-pole is normally on.
B	No overcurrent release element is mounted on the N-pole, and the N-pole is open and closed together with other three poles (the pole N is closed prior to open)
C	An overcurrent release element is mounted on the N-pole, and the N-pole is open and closed together with other three poles (the pole N is closed prior to open)
D	An overcurrent release element is mounted on the N-pole, and the N-pole is normally on.

Note: No code for 3-pole product; 3N corresponds to A type or D type; 4P corresponds to B type or C type.

TGM1NE Series Moulded Case Circuit Breaker

3 Technical Parameters

3.1 Main technical parameters

Table 3

Basic parameters													
Frame current Inm(A)		100		125		160		250		320		400	
Number of poles		3P, 3P+N, 4P											
Frequency (Hz)		50/60											
Rated wroking voltage Ue(V)		380/400/415 500/550 660/690											
Rated insulation voltage Ui(V)		1000											
Rated impulse withstand voltage Uimp (kV)		8										12	
Rated current range In (A)		32AF:12.5-32 63AF:25-63 100AF:40-100		32AF:12.5-32 63AF:25-63 125AF:50-125		63AF:25-63 125AF:50-125 160AF:63-160		200AF:80-200 250AF:100-250		200AF:80-200 250AF:100-250 320AF:125-320		300AF:120-300 315AF:125-315 400AF:160-400	
Breaking capacity grade		M	H	M	H	M	H	M	H	M	H	M	H
Rated limit short-circuit breaking capacity Icu (kA)	AC415V	50	85	50	85	50	85	50	85	50	85	70	100
	AC550V	30	40	30	40	30	40	30	40	30	40	40	50
	AC690V	10	20	10	20	10	20	10	20	10	20	20	30
Rated operating short-circuit breaking capacity Ics (kA)	AC415V	50	50	50	50	50	50	50	50	50	50	70	70
	AC550V	30	40	30	40	30	40	30	40	30	40	30	40
	AC690V	10	10	10	10	10	10	10	10	10	10	20	20
Icw(kA/1s)	AC415V	2		2		2.5		3		4		6	
Isolation funciton		Yes (for 3P and 4P); No (for 3P+N)											
Flashover distance (mm)		≤50										≤100	
Mechanical life(times)	Without maintenance	20,000		20,000		20,000		20,000		20,000		10,000	
	With maintenance	40,000		40,000		40,000		40,000		40,000		20,000	
Electrical life(times)		10,000		10,000		10,000		10,000		10,000		8,000	
Protection funciton information													
Overload long-time delay protection		■ (Standard)		■ (Standard)		■ (Standard)		■ (Standard)		■ (Standard)		■ (Standard)	
Short-circuit short-time delay protection		■ (Standard)		■ (Standard)		■ (Standard)		■ (Standard)		■ (Standard)		■ (Standard)	
Short-circuit instantaneous protection		■ (Standard)		■ (Standard)		■ (Standard)		■ (Standard)		■ (Standard)		■ (Standard)	
Grounding protection		□ (Optional)		□ (Optional)		□ (Optional)		□ (Optional)		□ (Optional)		□ (Optional)	
Neutral pole protection		□ (Optional)		□ (Optional)		□ (Optional)		□ (Optional)		□ (Optional)		□ (Optional)	
Other funciton informaiton													
Communication module (electronic shunt alarm accessory)		□ (Optional)		□ (Optional)		□ (Optional)		□ (Optional)		□ (Optional)		□ (Optional)	
Overload alarm non-trip		□ (Optional)		□ (Optional)		□ (Optional)		□ (Optional)		□ (Optional)		□ (Optional)	
Operation LED indicator		■ (Standard)		■ (Standard)		■ (Standard)		■ (Standard)		■ (Standard)		■ (Standard)	
Pre-alarm LED indicator		■ (Standard)		■ (Standard)		■ (Standard)		■ (Standard)		■ (Standard)		■ (Standard)	
Alarm LED indicator		■ (Standard)		■ (Standard)		■ (Standard)		■ (Standard)		■ (Standard)		■ (Standard)	
Accessory informaiton													
Direct operation by handle		■ (Standard)		■ (Standard)		■ (Standard)		■ (Standard)		■ (Standard)		■ (Standard)	
USB data cable		□ (Optional)		□ (Optional)		□ (Optional)		□ (Optional)		□ (Optional)		□ (Optional)	
Extended rotating handle		□ (Optional)		□ (Optional)		□ (Optional)		□ (Optional)		□ (Optional)		□ (Optional)	
Electric motor operating mechanism		□ (Optional)		□ (Optional)		□ (Optional)		□ (Optional)		□ (Optional)		□ (Optional)	
Shunt release		□ (Optional)		□ (Optional)		□ (Optional)		□ (Optional)		□ (Optional)		□ (Optional)	
Undervoltage release		□ (Optional)		□ (Optional)		□ (Optional)		□ (Optional)		□ (Optional)		□ (Optional)	
Aux. contact		□ (Optional)		□ (Optional)		□ (Optional)		□ (Optional)		□ (Optional)		□ (Optional)	
Alarm contact		□ (Optional)		□ (Optional)		□ (Optional)		□ (Optional)		□ (Optional)		□ (Optional)	
Fixed, front panel connection		■ (Standard)		■ (Standard)		■ (Standard)		■ (Standard)		■ (Standard)		■ (Standard)	
Plug-in front panel connection (not optioial to 4P product)		□ (Optional)		□ (Optional)		□ (Optional)		□ (Optional)		□ (Optional)		□ (Optional)	
Plug-in rear panel connection		□ (Optional)		□ (Optional)		□ (Optional)		□ (Optional)		□ (Optional)		□ (Optional)	
Front panel connection transition plate		□ (Optional)		□ (Optional)		□ (Optional)		□ (Optional)		□ (Optional)		□ (Optional)	
Flash barrier		■ (Standard)		■ (Standard)		■ (Standard)		■ (Standard)		■ (Standard)		■ (Standard)	
Converter		□ (Optional)		□ (Optional)		□ (Optional)		□ (Optional)		□ (Optional)		□ (Optional)	

Note: s is the code of standard volume, with the same below.

TGM1NE Series Moulded Case Circuit Breaker

Table 3, continued

Basic parameters											
Frame current Inm(A)		630		630s		800		1250		1600	
Number of poles		3P, 3P+N, 4P									
Frequency (Hz)		50/60									
Rated wroking voltage Ue(V)		380/400/415 500/550 660/690									
Rated insulation voltage Ui(V)		1000									
Rated impulse withstand voltage Uimp (kV)		12									
Rated current range In (A)		400AF:160-400 500AF:200-500 630AF:250-630		400AF:160-400 500AF:200-500 630AF:250-630		630AF:250-630 800AF:315-800		800AF:315-800 1000AF:400-1000 1250AF:500-1250		1250AF:500-1250 1600AF:630-1600	
Breaking capacity grade		M	H	M	H	M	H	M	H	M	H
Rated limit short-circuit breaking capacity Icu (kA)	AC415V	70	100	70	100	70	100	70	100	70	100
	AC550V	40	50	40	50	40	50	40	50	40	50
	AC690V	20	30	20	30	20	30	20	30	20	30
Rated operating short-circuit breaking capacity Ics (kA)	AC415V	70	70	70	70	70	70	70	70	70	70
	AC550V	30	40	30	40	30	40	30	40	30	40
	AC690V	20	20	20	20	20	20	20	20	20	20
Icw(kA/1s)	AC415V	8		8		10		20		20	
Isolation funciton		Yes (for 3P and 4P); No (for 3P+N)									
Flashover distance (mm)		≤100									
Mechanical life(times)	Without maintenance	10,000		10,000		10,000		5,000		5,000	
	With maintenance	20,000		20,000		20,000		10,000		10,000	
Electrical life(times)		8,000		8,000		8,000		2,500		2,500	
Protection funciton information											
Overload long-time delay protection		■ (Standard)		■ (Standard)		■ (Standard)		■ (Standard)		■ (Standard)	
Short-circuit short-time delay protection		■ (Standard)		■ (Standard)		■ (Standard)		■ (Standard)		■ (Standard)	
Short-circuit instantaneous protection		■ (Standard)		■ (Standard)		■ (Standard)		■ (Standard)		■ (Standard)	
Grounding protection		□ (Optional)		□ (Optional)		□ (Optional)		□ (Optional)		□ (Optional)	
Neutral pole protection		□ (Optional)		□ (Optional)		□ (Optional)		□ (Optional)		□ (Optional)	
Other funciton informaiton											
Communication module (electronic shunt alarm accessory)		□ (Optional)		□ (Optional)		□ (Optional)		□ (Optional)		□ (Optional)	
Overload alarm non-trip		□ (Optional)		□ (Optional)		□ (Optional)		□ (Optional)		□ (Optional)	
Operation LED indicator		■ (Standard)		■ (Standard)		■ (Standard)		■ (Standard)		■ (Standard)	
Pre-alarm LED indicator		■ (Standard)		■ (Standard)		■ (Standard)		■ (Standard)		■ (Standard)	
Alarm LED indicator		■ (Standard)		■ (Standard)		■ (Standard)		■ (Standard)		■ (Standard)	
Accessory informaiton											
Direct operation by handle		■ (Standard)		■ (Standard)		■ (Standard)		■ (Standard)		■ (Standard)	
USB data cable		□ (Optional)		□ (Optional)		□ (Optional)		□ (Optional)		□ (Optional)	
Extended rotating handle		□ (Optional)		□ (Optional)		□ (Optional)		□ (Optional)		□ (Optional)	
Electric motor operating mechanism		□ (Optional)		□ (Optional)		□ (Optional)		□ (Optional)		□ (Optional)	
Shunt release		□ (Optional)		□ (Optional)		□ (Optional)		□ (Optional)		□ (Optional)	
Undervoltage release		□ (Optional)		□ (Optional)		□ (Optional)		□ (Optional)		□ (Optional)	
Aux. contact		□ (Optional)		□ (Optional)		□ (Optional)		□ (Optional)		□ (Optional)	
Alarm contact		□ (Optional)		□ (Optional)		□ (Optional)		□ (Optional)		□ (Optional)	
Fixed, front panel connection		■ (Standard)		■ (Standard)		■ (Standard)		■ (Standard)		■ (Standard)	
Plug-in front panel connection (not optioial to 4P product)		□ (Optional)		□ (Optional)		□ (Optional)		/		/	
Plug-in rear panel connection		□ (Optional)		□ (Optional)		□ (Optional)		/		/	
Front panel connection transition plate		□ (Optional)		□ (Optional)		□ (Optional)		/		/	
Flash barrier		■ (Standard)		■ (Standard)		■ (Standard)		■ (Standard)		■ (Standard)	
Converter		□ (Optional)		□ (Optional)		/		/		/	

Note: s is the code of standard volume, with the same below.

TGM1NE Series Moulded Case Circuit Breaker

3.2 Action characteristics

3.2.1 Overload long-time delay protection features

Table 4

Usage and current		Tripping time(t_r)								
For power distribution	$1.05I_r$	No tripping ≤2h / when I_r ≤ 63A, No tripping ≤ 1h								
	$1.3I_r$	Action ≤ 1h								
	$2I_r$	Current section (A)	100/125/160/250/320				400/630/630*/800/1250/1600			
		Setting time I_r (s)	12	60	80	100	12	60	100	150
For motor protection	$1.0I_r$	No tripping ≤2h / when I_r ≤ 63A, No tripping ≤ 1h								
	$1.2I_r$	Tripping≤ 1h								
	$1.5I_r$	Current section (A)	100/125/160/250/320				400/630/630*/800/1250/1600			
		Action time (s)	21.3	107	142	178	21.3	107	178	267
	$2I_r$	Setting time I_r (s)	12	60	80	100	12	60	100	150
	$7.2I_r$	Action time (s)	0.93	4.63	6.17	7.72	0.93	4.63	7.72	11.6
	Trip level		/	10A	10	20	/	10	20	30

Notes: 1. Action time complies with $T1=(2I_r/I)^2t_r$;
2. Action time tolerance is ±20%.

3.2.2 Short-circuit short-time delay protection features

Table 5

Current set value	Action characteristics	Trip duration(t_{sd})					
Isd: 2~12I_r Adjustable (closed)	I_{sd}≤I<I_i	Definite time	Time	0.06	0.1	0.2	0.3 (Default)
			Tolerance	±0.02	±0.03	±0.04	±0.06
			Return time	/	/	0.14	0.21

Note: The action current tolerance is ±15%.

3.2.3 Short-circuit instantaneous protection features

Table 6

Current set value	Action characteristics	Trip duration (t_{sd})
I_i: 4~14I_r Adjustable (closed)	I≤0.85I_i	No action
	I≥1.15I_i	<0.2s

3.2.4 Grounding protection features

Table 7

Current set value	Action characteristics	Trip duration (t_{sd})
I_g: 0.7~1In Adjustable (closed)	$I<0.9I_g$	No action
	$I\geq1.1I_g$	0.ls, 0.2s, 0.3s, 0.4s (Default)
Note: I_g setting range is 0.4 ~ 1In that is adjustable (closed) for frame current 1250A and 1600A		

3.2.5 Alarm functions

Table 8

Current set value	Action characteristics	Description
I_P: 0.7~1I_r adjustable (closed)	Overload alarm non-trip	Only communciation adjustment supported

3.2.6 Neutral pole protection features

Table 9

Current set value	Gear setting	Description
I_m: 0.5~1I_r adjustable (closed)	0.5I_r	Long-time delay, short-time delay, and instantaneous current set value of the neutral line equal to 1/2 of proteciton set value of the phase line, and the time equlas to that of the phase line protection.
	1I_r	Long-time delay, short-time delay, and instantaneous current set value of the neutral line equal to the proteciton set value of the phase line, and the time equlas to that of the phase line protection.

4 Operating Conditions

4.1 Ambient air temperature: -5℃ ~ +40℃; the mean temperature within 24h does not exceed +35℃; please contact the manufacturer when the ambient air temperature exceeds +40℃ or below -5℃;

4.2 Installation altitude: ≤2,000 meters;

4.3 The relative air humidity does not exceed 50% at the maximum temperature +40℃, and a higher relative humidity is allowed at a low temperature; the mean temperature does not exceed +25℃ in the wettest month, and the maximum mean relative humidity of that month does not exceed 90%. Necessary measures are taken for condensation occurred occasionally due to temperature changes;

4.4 Installed in places whether there is no impact vibration or rain and snow invasion;

4.5 Installed in places whether there is no explosive or hazardous medium, and there is no enough gas or conductive dust to cause corrosion to the metal or damage to the insulation;

4.6 1, 3, 5, and LINE are connected to the power side; 2, 4, 6, LOAD are connected to the load side; the circuit breaker can be installed vertically (vertical installation), and can be installed horizontally (lateral installation); reverse connection is prohibited;

4.7 Pollution degree: 3;

4.8 The installation category of main circuit is III, and of the auxiliary circuit and control circuit not connected to main circuit is II;

4.9 The external magnetic field near the circuit breaker installation site shall not exceed 5 times earth's magnetic field in any direction;

4.10 Please handle the product with care, do not put it upside down and avoid severe collision during transport.

TGM1NE Series Moulded Case Circuit Breaker

5 Tripper Mode and Accessary Code

5.1 Internal accessory code table

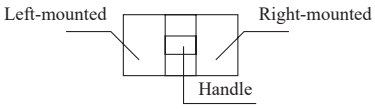

Alarm contact ● Aux. contact ○ Shunt release ■
Undervoltage release ▲ Shunt release of prepaid meter ★
Communication module (electronic shunt alarm accessory) ◇
Overload alarm non-trip ◆

Table 10

Accessory name	Accessory code	TGM1NE-100 TGM1NE-125 TGM1NE-160	TGM1NE-250 TGM1NE-320	TGM1NE-400 TGM1NE-630	TGM1NE-630S	TGM1NE-800	TGM1NE-1250	TGM1NE-1600
		Default configuraion	Default configuraion	Default configuraion	Default configuraion	Default configuraion	Default configuraion	Default configuraion
No accessory	00							
Alarm contact	08	●	●	●	●	●	●	●
Shunt release	10	■	■	■	■	■	■	■
Aux. contact	20	○	○	○	○	○	○	○
Undervoltage release	30	▲	▲	▲	▲	▲	▲	▲
Shunt release Aux. contact	40	■ ○	■ ○	■ ○	■ ○	■ ○	■ ○	■ ○
Shunt release Undervoltage release	50	■ ▲	■ ▲	■ ▲	■ ▲	■ ▲	■ ▲	■ ▲
Two sets of aux. contacts	60	○ ○	○ ○	○ ○	○ ○	○ ○	○ ○	○ ○
Aux. contact Undervoltage release	70	▲ ○	▲ ○	▲ ○	▲ ○	▲ ○	▲ ○	▲ ○
Shunt release Alarm contact	18	■ ●	■ ●	■ ●	■ ●	■ ●	■ ●	■ ●
Aux. contact Alam contact	28	● ○	● ○	● ○	● ○	● ○	● ○	● ○
Undervoltage release Alarm contact	38	● ▲	● ▲	● ▲	● ▲	● ▲	● ▲	● ▲
Shunt release Aux. contact Alarm contact	48	● ○ ■	● ○ ■	● ○ ■	● ○ ■	● ○ ■	● ○ ■	● ○ ■
Two sets of aux. contacts Alarm contact	68	○ ○ ●	○ ○ ●	○ ○ ●	○ ○ ●	○ ○ ●	○ ○ ●	○ ○ ●
Undervoltage release Aux. contact Alarm contact	78	● ○ ▲	● ○ ▲	● ○ ▲	● ○ ▲	● ○ ▲	● ○ ▲	● ○ ▲
Prepaid meter Shunt release		★	★	★	★	★		
Communication mudule (electronic shunt alarm accessory)		◇	◇	◇	◇	◇	◇	◇
Overload alarm non-trip backpack		◆	◆	◆	◆	◆	◆	◆

Note: Left-mounted and right-mounted modes are available for internal accessories. Please specify the accessory installation direction when ordering (such as right shunt); the default setting is available unless otherwise specified.
Prepaid shunt is suitable for 160-800 frame current.
For 400 and below type, one set of auxiliary contacts contain one NO contact and one NC contact; for 400 and above type, one set of auxiliary contacts contain two NO contacts and one NC contacts.

6 Electronic Release

6.1 Indicator state

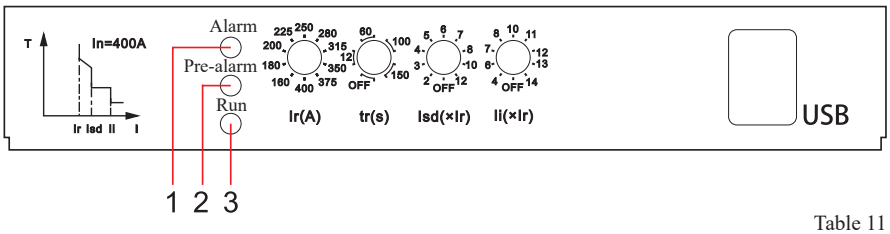

Table 11

	Indicator description	Indicator run state description
1	Alarm LED indicator (red)	When I>1.05I_r, the overload alarm indicator is on; when I≤1.0I_r, the overload alarm indciator is off;
2	Prealarm LED indicator (yellow)	When I>1.1I_p, the prealarm alarm indicator is on; when I≤0.9I_p, the prealarm alarm indciator is off (the prealarm set value is 0.9 I_r by default)
3	Operation LED indicator (green)	When I>0.4In, the run indicator flashes (lit once per second); when I≤0.35In, the run indicator flashes slowly (lit once per 2 seconds)

6.2 Four-button type controller (common type)

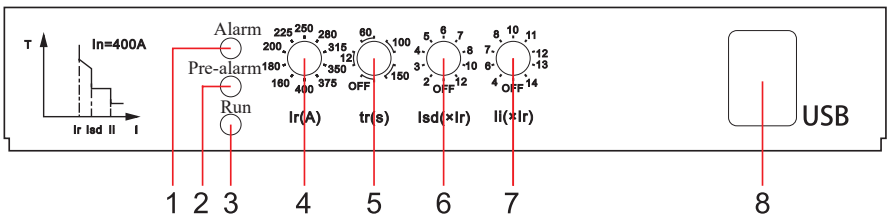

Table 12

Four-button intelligent controller informaiton		
1	Alarm LED indicator (red)	Default parameters 1 The default setting value of short-circuit short-time delay time is t_{sd} = 0.3s 2 The default setting value of overload prealarm current is I_p = 0.9 x I_r
2	Prealarm LED indicator (yellow)	
3	Operation LED indicator (green)	
4	Overload long-time delay current setting value I_r(A)	
5	Overload long-time delay time setting value I_r(s)	
6	Short-circuit short-time delay current setting value I_{sd}(A)	
7	Short-circuit instantaneous current setting value	
8	USB interface	

TGM1NE Series Moulded Case Circuit Breaker

6.3 Neutral pole protection controller (E1 type)

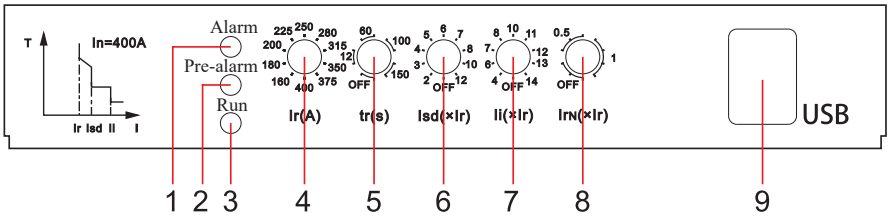

Table 13

Five-button intelligent controller informaiton		
1	Alarm LED indicator (red)	Default parameters 1 The default setting value of short-circuit short-time delay time is t_{sd} = 0.3s 2 The default setting value of overload prealarm current is I_p = 0.9 x I_r
2	Prealarm LED indicator (yellow)	
3	Operation LED indicator (green)	
4	Overload long-time delay current setting value I_r(A)	
5	Overload long-time delay time setting value I_r(S)	
6	Short-circuit short-time delay current setting value I_{sd}(A)	
7	Short-circuit instantaneous current setting value I_i(A)	
8	Neutral pole protection current setting value I_{rn}(A)	
9	USB interface	

6.4 Grounding type protection controller (E3 type)

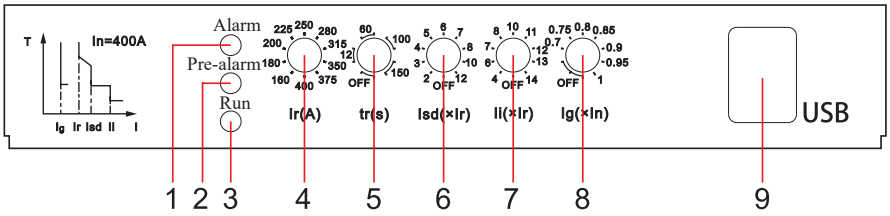

Table 14

Five-button intelligent controller informaiton		
1	Alarm LED indicator (red)	Default parameters 1 The default setting value of short-circuit short-time delay time is t_{sd} = 0.3s 2 The default setting value of overload prealarm current is I_p = 0.9 x I_r 3 The setting value of grounding proteciton time is t_g = 0.4s 4 The setting ragne for 1250 shell frame and 1600 frame current is 0.4 ~ 1In (it can be closed).
2	Prealarm LED indicator (yellow)	
3	Operation LED indicator (green)	
4	Overload long-time delay current setting value I_r(A)	
5	Overload long-time delay time setting value Ir(S)	
6	Short-circuit short-time delay current setting value I_{sd}(A)	
7	Short-circuit instantaneous current setting value I_i(A)	
8	Grounding protection current setting value I_g(A)	
9	USB interface	

6.5 Communication type controller (E2 type)

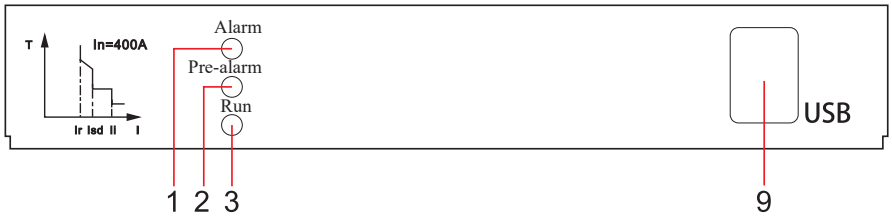

Table 15

Communicaiton type controller informaiton		
1	Alarm LED indicator (red)	Default parameters 1 The default setting value of short-circuit short-time delay time is t_{sd} = 0.3s 2 The default setting value of overload prealarm current is $I_p = 0.9 \times I_r$
2	Prealarm LED indicator (yellow)	
3	Operation LED indicator (green)	

6.6 Usage of USB data interface

USB data interface can be used in the Android system, and support the mobile phone with OTG function realizes connection and communication via a dedicated transfer cable. The APP loaded on the mobile phone can be installed and run on the Android phone with OTG function, and the software interface is as follows:

1. APP supports TGM1NE Xiangyun electronic type moulded case series product at present.
2. APP realizes some remote regulation and remote measurement functions between the mobile phone and the circuit breaker.

Note: The mobile phone is connected to the terminal equipment through a dedicated transfer wire. The OTG function of mobile phone may be activated to successfully connect to the equipment depending on the specific phone model.

TGM1NE Series Moulded Case Circuit Breaker

7 Technical Data

7.1 Before installing circuit breaker:

a) Check whether technical parameters on the nameplate meet the requirements;

b) Please open and close the circuit breaker several times and check the circuit breaker operating mechanism for blockage and the mechanism for reliable action.

7.2 When installing circuit breaker:

a) “1”, “3”, “5”, and “LINE(N)” of circuit breaker are incoming terminals, and “2”, “4”, “6”, and “LOAD(N)” are outgoing terminals;

b) The recommended sectional areas of the connecting wire corresponding to the rated current of release are shown in Table 16; the screw tightening torques are listed in Table 17 to ensure normal operation of circuit breaker.

7.2.1 Reference sectional areas of connecting wire under different rated current

Table 16

Rated current In(A)	32	63	100	125	160	250	320	400
Sectional area of wire (mm^2)	6	16	35	50	70	120	185	240

Rated current In(A)	Cable		Copper bar	
	Sectional area (mm^2)	Qty.	Size (mm x mm)	Qty.
630	185	2	40 x 5	2
800	240	2	50 x 5	2
1250	/	/	80 x 5	2
1600	/	/	100 x 5	2

Note: Wiring board with the thickness 10mm is recommended for TGM1NE-1250/1600; if there is a wiring board with other thickness, please contact the manufacturer to customize the wiring screws of the corresponding length to prevent that wiring screws are tightened not firmly or damaged resulting in short circuit between the phases.

7.2.2 Screw tightening torques

Table 17

Product model	TGM1NE-100/125/160	TGM1NE-250/320	TGM1NE-400/630
Nominal diameter of thread (mm)	M8	M8	M10
Tightening torue (N.m)	10	12	22
Failure moment (N.m)	15	18	26

Product model	TGM1NE-630s	TGM1NE-800	TGM1NE-1250	TGM1NE-1600
Nominal diameter of thread (mm)	M12	M12	M10	M10
Tightening torue (N.m)	28	28	18	18
Failure moment (N.m)	33	33	22	22

7.3 Select the circuit breaker with different rated current according to the requirements of protective objects, otherwise the correct protection cannot be realized.

TGM1NE Series Moulded Case Circuit Breaker

7.4 Power loss

Table 18

Product model	Power current (A)	Total power loss of 3P/4P(W)		
		Front panel/ Rear panel connection	Plug-in front panel connection	Plug-in rear panel connection
TGM1NE-100	100	10	10	11
TGM1NE-125	125	12	12	12.2
TGM1NE-160	160	40	50	62
TGM1NE-250	250	50	75	86
TGM1NE-320	320	55	80	89
TGM1NE-400	400	58	87	90
TGM1NE-630/630^{s}	630	110	120	130
TGM1NE-800	800	115.2	125	140

7.5 Derating coefficient under different temperature

Table 19

Product model	Power current (A)	Ambient temperature						
		-35°C	-30°C	-25°C	-20°C	-15°C	-10°C	-5°C
TGM1NE-100	100	1In	0.95In	0.94In	0.93In	0.92In	0.91In	0.89In
TGM1NE-125	125	1In	0.95In	0.94In	0.93In	0.92In	0.91In	0.89In
TGM1NE-160	160	1In	0.95In	0.94In	0.93In	0.92In	0.91In	0.89In
TGM1NE-250	250	1In	0.95In	0.9In	0.89In	0.85In	0.81In	0.78In
TGM1NE-320	320	1In	0.95In	0.9In	0.89In	0.85In	0.81In	0.78In
TGM1NE-400	400	1In	0.95In	0.9In	0.89In	0.85In	0.81In	0.78In
TGM1NE-630/630^{s}	630	1In	0.95In	0.94In	0.92In	0.9In	0.87In	0.86In
TGM1NE-800	800	1In	0.95In	0.93In	0.85In	0.82In	0.8In	0.78In
TGM1NE-1250	1250	1In	0.95In	0.93In	0.85In	0.82In	0.8In	0.78In
TGM1NE-1600	1600	1In	0.95In	0.93In	0.85In	0.82In	0.8In	0.78In

(1) Derating coefficient is measured at the maximum rated current of each frame for TGM1NE circuit breaker.
(2) When the ambient temperature is lower than 40°C, the product can work normally and the derating not required.

TGM1NE Series Moulded Case Circuit Breaker

8 Introduction to Product Accessory

Complete internal accessories and external accessories are provided for moulded case circuit breaker to satisfy the needs of different client.

8.1 Internal accessory code

Table 20

OF	1N	-	125	L	D	A2
Accessory code	Adaptive circuit breaker code		Frame current code	Installation position	Wire leading-out mode	Voltage grade
OF: Aux. contact SD: Alarm contact MN: Undervoltage release MX: Shunt release	1N:TGM1NE		100, 125, 160, 250, 320, 400, 630, 630^{s}, 800, 1250	L: Left R: Right	Default: Direct wire leading out D: Wiring terminal box	Default: No A1: AC220 / 230 / 240V A2: AC380 / 400 / 415V D1: DC24V D2: DC110V D3: DC220V

8.1.1 Aux. contact OF

- It is an accessory that is connected to the auxiliary circuit of circuit breaker to indicate the ON or OFF/ Free trip state of circuit breaker remotely.

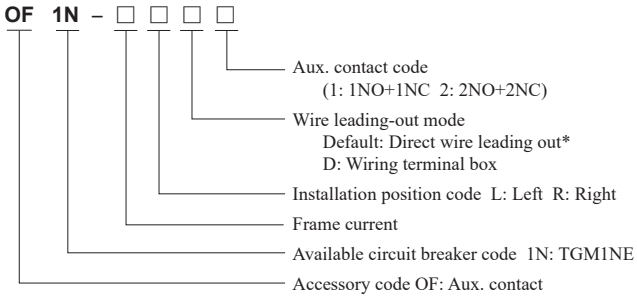

*Note: The direct leading out length of wire is 50cm by default; please specify other length if required when ordering.

For example: The code of right auxiliary contact with a terminal box for TGM1NE series 250 shell frame is OF1N-250RD2.

- Wiring diagram

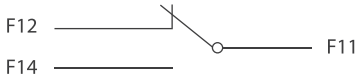

Status of the circuit breaker at "free tripping" and "OFF" positions

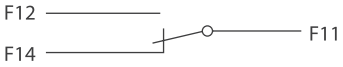

Status of the circuit breaker at "ON" positions

- Main parameters

Table 21

Resistive current Ith (A)	Rated insulation voltage Ui (V)	Rated working current Ie (A)		Range
		AC-15(380-400-415V)	DC-13(110-220-250V)	
3	690	0.3	0.15	Inm≤320A
6	690	1	0.15	Inm≥400A

TGM1NE Series Moulded Case Circuit Breaker

8.1.2 Undervoltage release MN

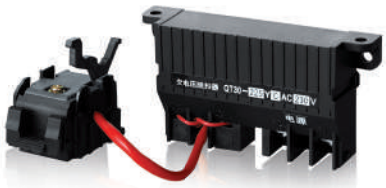

- To realize the undervoltage protection of circuit breaker; disconnect the circuit breaker when the power voltage is too low for protection of electrical equipment
  - a When the voltage is 35%-70% of rated working voltage, the undervoltage release shall work reliably to trip circuit breaker;
  - b When the voltage is 85%-110% of rated working voltage, the undervoltage release shall work to close circuit breaker;
  - c When the voltage is below 35% rated working voltage, the undervoltage release shall work reliably to prevent the circuit breaker being closed;

*Note: The undervoltage release must be powered on, and then the circuit breaker is connected and closed, otherwise this may cause damage to the circuit breaker.

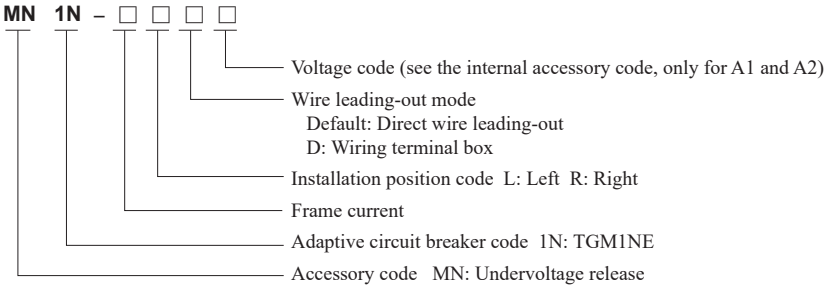

Note: the lead-out length of the direct wire is 50cm by default. Please specify other lengths when ordering.

Example: TGM1NE series frame current 250A with undervoltage AC220 (direct lead out) model code: MN1N-250LA1

- Wiring diagram

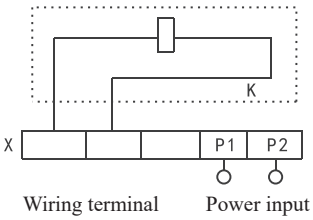

*Note: The internal wiring diagram of circuit breaker is shown in dashed box

- Electrical specifications

Table 22

Product model	Starting current (mA)		Power (W)	
	AC400V	AC230V	AC400V	AC230V
TGM1NE-100/125/160	9.95	15.55	4.55	3.82
TGM1NE-250/320	10.88	15.83	4.85	3.92
TGM1NE-400/630/630s	9.5	11.2	3.8	2.83
TGM1NE-800	5.4	7.75	2.7	1.85
TGM1NE-1250	5.4	7.75	2.7	1.85
TGM1NE-1600	5.4	7.75	2.7	1.85

TGM1NE Series Moulded Case Circuit Breaker

8.1.3 Alarm contact SD

- It is an accessory that is connected to the auxiliary circuit of circuit breaker to indicate the state of circuit breaker at the non-trip (ON or OFF) or trip (Trip) position

There may be four trip indications issued by an alarm contact:

- Overload or short-circuit fault
- Test button trip
- Residual current fault
- Shunt/Undervoltage release

SD 1N – □ □ □

- Wire leading-out mode
  - Default: Direct wire leading-out*
  - D: Wiring terminal box
- Installation position code L: Left R: Right
- Shell frame current
- Adaptive circuit breaker code 1N: TGM1NE
- Accessory code SD: Alarm contact

*Note: The direct leading-out length of wire is 50cm by default; please specify other length if required when ordering.

For example: The code of left alarm (direct wire leading-out) for TGM1NE series 250 shell frame is SD1N-250L.

- Wiring diagram

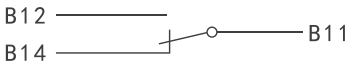

Circuit breaker at the free trip (alarm) state

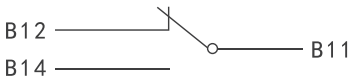

Circuit breaker at the “OFF” or “ON” state

- Main Parameters

Table 23

Resistive current Ith (A)	Rated insulation voltage Ui (V)	Rated working current Ie (A)		Range
		AC-15(380-400-415V)	DC-13(110-220-250V)	
3	690	0.3	0.15	Inm≤320A
6	690	1	0.15	Inm≥400A

TGM1NE Series Moulded Case Circuit Breaker

8.1.4 Shunt release MX

MX 1N – □ □ □ □

- Voltage code (see internal accessory code Table 21)
- Wire leading-out mode
  - Default: Direct wire leading-out*
  - D: Wiring terminal box
- Installation position code L: Left R: Right
- Shell frame current
- Adaptive circuit breaker code 1N: TGM1NE
- Accessory code MX: Shunt release

- To disconnect the circuit breaker remotely When the rated control power voltage Us is ranged 70% to 110%, the shunt release can work reliably to make circuit breaker trip

*Note: The direct leading out length of wire is 50cm by default; please specify other length if required when ordering (the maximum length of lead wire is 100mm).

For example: The code of left shunt DC220 (direct wire leading-out) for TGM1NE series 250 shell frame is MX1N-250LD3.

- Wring diagram

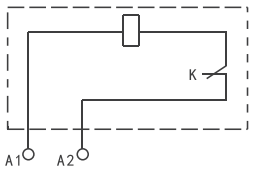

Power input

*Note:

K – The microswitch that the shunt release is connected to the coil internally in series is a normally-closed contact; when the circuit breaker is off, this contact will open automatically, and is closed if on.

When the control voltage is DC24V, the maximum length of copper wire meets the following requirements and the rated current at the release wiring terminal shall reach 5A±0.5A:

Table 24

Sectional area of wire / Rated control power voltage Ue (DC24V)	1.5mm²	2.5mm²
100% power voltage	150m	250m
85% power voltage	100m	160m

The below figure is recommended in the circuit design of shunt controller, If control voltage doesn't meet criteria of the above table:

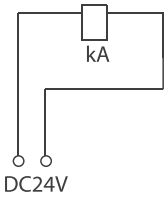

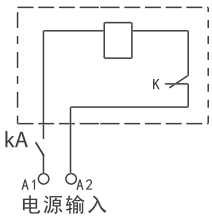

*Note:

KA is DC24V intermediate relay, and the current capacity of contact is 1A.

- Electrical specification

Table 25

Product model	Starting current (mA)				Power (W)			
	AC400V	AC230V	DC220V	DC24V	AC400V	AC230V	DC220V	DC24V
TGM1NE-100/125/160	0.35	0.45	0.37	4.52	95.8	73	90.7	91.2
TGM1NE-250/320	0.42	0.48	0.39	4.51	112	68.8	90.7	85.3
TGM1NE-400/630/630^{s}	0.48	0.51	0.41	4.51	132	78.3	94.4	110
TGM1NE-800	0.54	0.85	1.21	5.51	163	153	158	120
TGM1NE-1250	0.85	1.31	1.72	5.82	185	173	166	130
TGM1NE-1600	0.85	1.31	1.72	5.82	185	173	166	130

TGM1NE Series Moulded Case Circuit Breaker

8.2 External accessories and code

Table 26

LCD2	1N	-	125	A2	
Accessory code	Adaptive circuit breaker code		Frame current code	Voltage grade	Number of poles
AH: Round manual operated handle	1N:TGM1NE		100, 125, 160, 250, 320, 400, 630, 630^{s}, 800, 1250, 1600	A1: AC220 / 230 / 240V A2: AC380 / 400 / 415V D1: DC24V D2: DC110V DC3: DC220V	Three-pole: 3P Four-pole: 4P
RH: Squre manual operated handle					
LCD2: Common AC and DC motor mechanism					
GP: Front panel connection wiring transition plate					
GB: Phase partition					
BH: Rear panel connection					
LS: Mechancial interlock					

8.2.1 Manual operating mechanism RN/AH

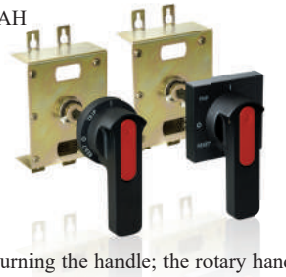

- Operate the circuit breaker through turning the handle; the rotary handle that meets the ergonomic design requirements is used for more flexible operation of circuit breaker

There are two forms of manual operated mechanism for TGM1NE series circuit breaker:

Extended rotary handle (round extended manual operating handle, square extended manual operating handle)

RH 1N – □

- □: Shell frame current
- 1N: Adaptive circuit breaker code 1N: TGM1NE
- RH: Accessory code
  - AH: Round manual operating handle
  - RH: Square manual operating handle

For example: The code of round manual operating handle for TGM1NE series 250 frame is AH1N-250.

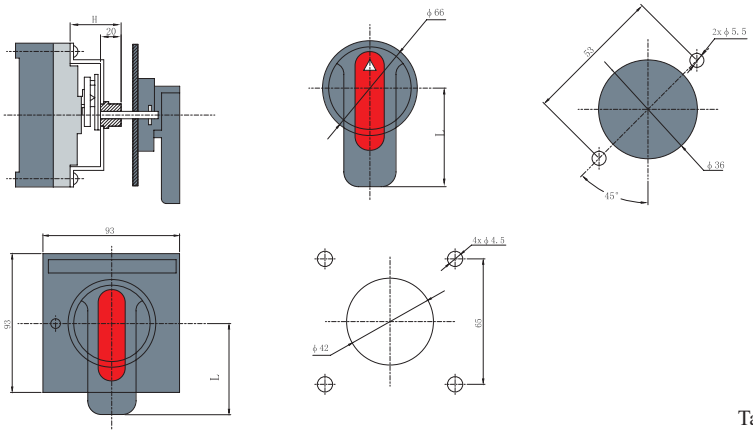

Table 27

Model & Spec.	TGM1NE-100/125/160	TGM1NE-250/320	TGM1NE-400/630	TGM1NE-630^{s}	TGM1NE-800	TGM1NE-1250
Installation dimension (H)	61	57	87	88	87	93
Handle length (L)	65	95	125	125	125	93

*Note: The default length of the extended rod of manual handle is 150mm, and the maximum length is 500mm (specification graded by 50mm increment).

TGM1NE Series Moulded Case Circuit Breaker

8.2.2 Electric motor operating mechanism LCD2

- It is used for remote and electric closing, opening and trip of circuit breaker and for automatic control application

LCD2 1N – □ □

- Voltage code (see the external accessory code table 27)
- Frame current
- Adaptive circuit breaker code 1N: TGM1NE
- Accessory code LCD2: Common AC and DC motor mechanism

*Example: The code of motor mechanism AC380V for TGM1NE series 250 frame is LCD21N-250A2.

- Electrical specifications and wiring diagram

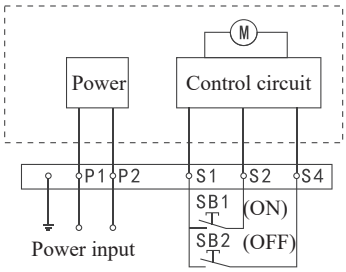

*Note:

K - Microswitch that the shunt release is connected to the coil internally in series is a NC contact. When the circuit breaker opens, this contact will open automatically, and is off when closed.

P1 and P2 are external connection and power input, respectively

SB1 and SB2 are operating buttons (provided by user)

- Outline and installation dimensions

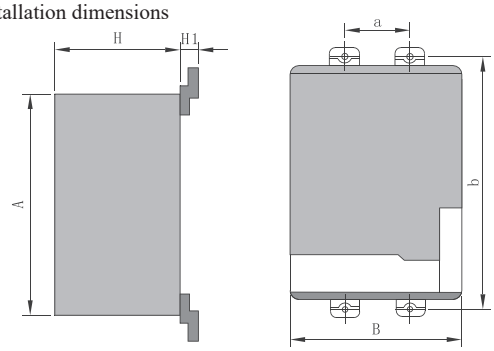

Table 28

Model	A	B	H	H1	a	b
TGM1NE-100/125/160	116	90	79	20.5	30	129
TGM1NE-250/320	116	90	79	16.5	35	126
TGM1NE-400/630	174	130	117	35.5	44	194
TGM1NE-630^{s}	174	130	117	28.5	58	200
TGM1NE-800	174	130	117	33.5	70	243
TGM1NE-1250	174	130	117	35.5	70	300
TGM1NE-1600	174	210	75	/	70	303

TGM1NE Series Moulded Case Circuit Breaker

8.2.3 Front panel connecting transition plate GP

GP 1N – □

- Code of number of poles
  - 2P: Two-pole
  - 3P: Three-pole
  - 4P: Four-pole
- Adaptive circuit breaker code 1N: TGM1NE
- Accessory code GP: Front panel connection transition plate

- It is used for more flexible wiring way of circuit breaker, and the phase distancing is increased by adding this part, improving the safety between the lines

Note: The expanded terminal code only contains transition bar of the incoming terminal or outgoing terminal (such as, only three wiring plates are provided for 3P); please order two sets if transition bars are required for both incoming and outgoing terminals.

Example: The code of 3P transition plate for TGM1NE series 250 frame is GP1N-2503P.

8.2.4 Phase partition GB

GB 1N – □

- Code of number of poles
  - 2P: Two-pole
  - 3P: Three-pole
  - 4P: Four-pole
- Adaptive circuit breaker code 1N: TGM1NE
- Accessory code GB: Phase partition

- It is used to improve the insulation performance of the conductor between the phases; it can be installed from the front slot even when the switch has been installed.

*Note: The phase partition is as standard part when shipment, one circuit breaker (two pieces for 2-pole, four pieces for 3-pole, six pieces for 4-pole)

Example: The code of 3P phase partition for TGM1N series 250 frame is GB1N-2503P.

8.2.5 Rear panel connection BH

BH 1N – □ □

- Code of number of poles
  - 2P: Two-pole
  - 3P: Three-pole
  - 4P: Four-pole
- Frame current
- Adaptive circuit breaker code 1N: TGM1NE
- Accessory code BH: Rear panel connection

- It is used for more flexible wiring way of circuit breaker, and the back-plate wiring can be realized by adding this accessory

Example: The code of 3P rear panel for TGM1NE series 250 frame is BH1N-2502P.

TGM1NE Series Moulded Case Circuit Breaker

8.2.6 Mechanical interlock LS

LS 1N – □ □

- Code of number of poles
  - 2P: Two-pole
  - 3P: Three-pole
  - 4P: Four-pole
- Frame current
- Adaptive circuit breaker code 1N: TGM1NE
- Accessory code LS: Mechanical interlock

- It is used to realize that two circuit breakers are interlocked to prevent them from closing.
  Example: The code of mechanical interlock for TGM1NE series 250 frame is LS1N-2503P

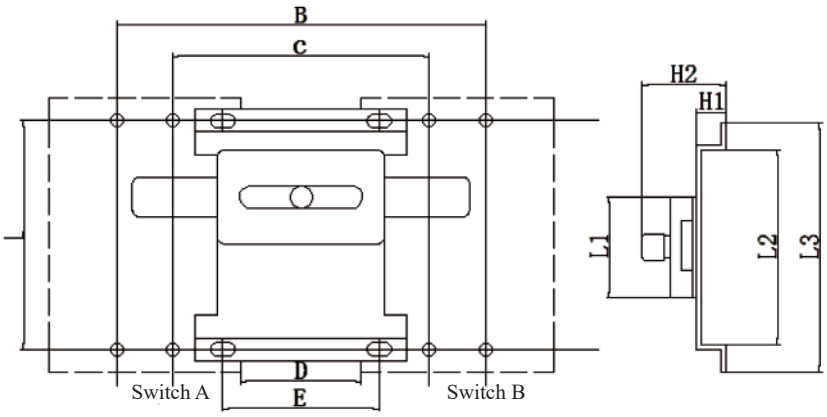

Outline and installation dimension diagram of TGM1NE series 3P mechanical interlock

Table 29

Model & Spec.	Outline and installation dimensions (mm)								
	B	C	D	E	L1	L2	L3	H1	H2
TGM1NE-100/125/160	151	91	28.5	36	40	101	122	25	48
TGM1NE-250/320	170	100	28	100	40	128	155	25	48
TGM1NE-400/630	221.5	133.5	27.5	41	60	179	207	30.5	55
TGM1NE-800	320	180	40	52	60	229	254	30.5	55

TGM1NE Series Moulded Case Circuit Breaker

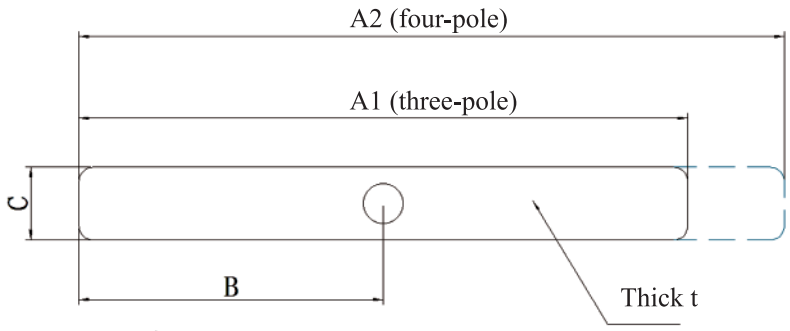

Table 30

Model & Spec.	Outline dimensions of slip strip (mm)				
	A1	A2	B	C	t
TGM1NE-100/125/160	120	152	60	22	5
TGM1NE-250/320	130	166	65	22	5
TGM1NE-400/630	190	235	96	28	6
TGM1NE-800	250	323	125	28	6

8.3 Prepaid meter shunt release

8.3.1 Difference between the prepaid meter shunt release and the common shunt release: The iron core will be pulled in to drive the product act after the common shunt release is powered on; there are two states for prepaid shunt:

a) Iron core will be pulled after a delay 0.5-2s after P1 and P2 are powered on directly to drive the product act.

b) P1 and P2 powered iron core will not be pulled in after UC1 and P1 are powered on, and the product will not work.

8.3.2 Prepaid svhunt release control power voltage: AC220V, 50Hz.

8.4 Backpack function

8.4.1 Communication backpack

a) The backpack is used to realize “three-remote” or “four-remote” functions;

b) The backpack is used to realize passive shunt function without additional shunt accessories required.

8.4.2 Overload alarm non-trip/overload alarm trip backpack

a) The backpack is used to realize the overload alarm non-trip function;

b) Overload alarm non-trip/trip can be switched via the button;

c) The backpack is used to realize the alarm signal output without additional alarm contact accessory required.

8.4.3 Backpack power AC230/400V self-adaption or DC24V; backpack wiring diagram and its function refer to Article 8.6.

8.5 Five-button controller

Difference between five-button controller and four-button controller: The five-button controller is a circuit board with an adjustable five-position button; four-button controller is a circuit board with an adjustable four-position button.

TGM1NE Series Moulded Case Circuit Breaker

8.6 TGM1NE series communication module (electronic shunt alarm accessory)

8.6.1 Product functions

Communication module (electronic shunt alarm accessory) (hereinafter referred to as communication module) has seven function areas such as auxiliary output without power, alarm output without power, shunt output without power, auxiliary input without power, alarm input without power, RS485 communication, and motor operation based on Modbus protocol. The communication module can be connected to TGM1NE circuit breaker through accessories such as motor mechanism and auxiliary alarm to realize telecontrol, tele-regulation, telemetering, and telesignalling functions of product.

The overload alarm non-trip module has alarm output without power function; that is, when the actual current of circuit breaker is greater than the overload trip current, the alarm output without power is switched and the backpack's alarm indicator is on when the circuit breaker reaches the trip duration, but the circuit breaker does not trip.

8.6.2 Technical parameters

Table 31

No.	Name	Rated voltage
1	Communication module (electro shunt alarm accesory)	AC230V/AC400V, DC24V
2	Overload alarm non-trip module	AC230V/AC400V, DC24V

8.6.3 Communication module function debugging

8.6.3.1 Introduction to communication module

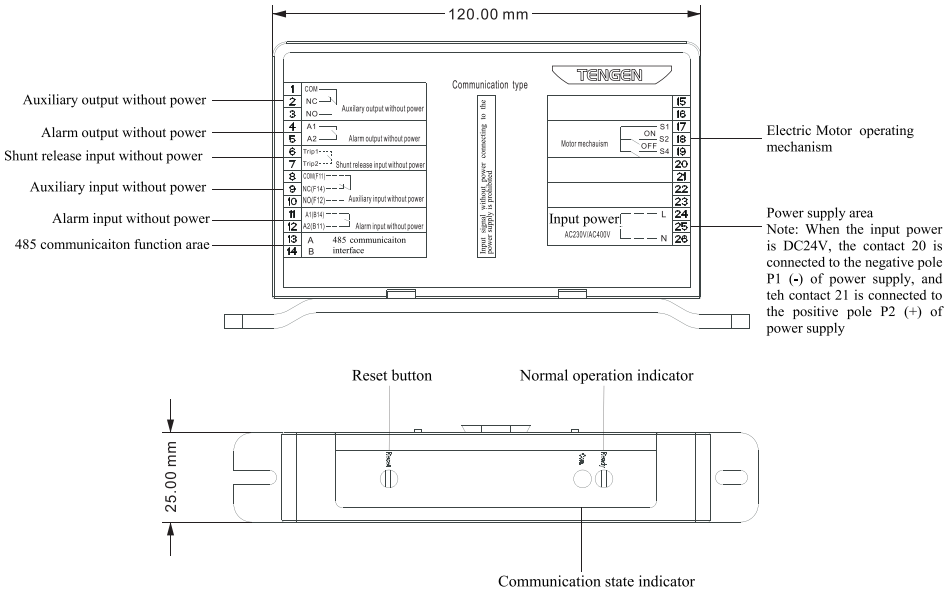

Fig. 1 Introduction to communication module

Contacts 17 (S1), 18 (S2) and 19 (S4) are connecting contacts in the motor mechanism control area to connect each interface in the communication module motor mechanism control function area to the corresponding interface of motor mechanism to realize the remote control of product opening and closing operation via communication module. The communication module and motor mechanism assembly effect are shown in Fig. 2.

TGM1NE Series Moulded Case Circuit Breaker

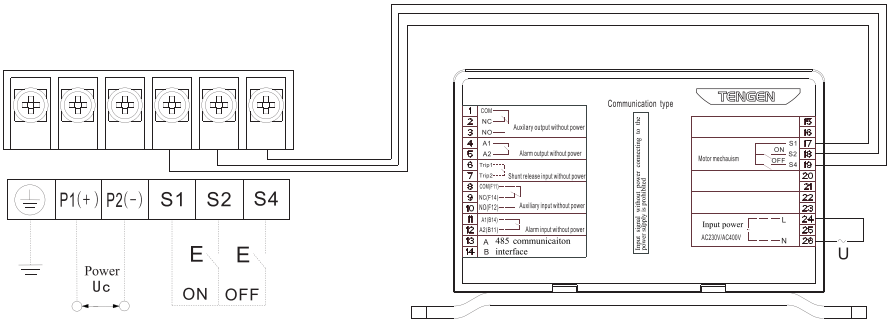

Fig. 2 Communication module and Electric motor operating mechanism assembly drawing

8.6.3.2 Function area of auxiliary input without power

The function area of auxiliary input without power receives the signal from the auxiliary accessory; contact 9 (F12) is a normally-open contact, contact 10 (F14) is a NC contact, and contact 8 (F11) is a common contact to connect contacts 8, 9, and 10 of communication module to the contacts F11, F12, and F14 of auxiliary, respectively, realizing the telesignaling function of product, and realizing the telecontrol and telesignaling functions by combining with motor mechanism. In addition, with this function, the auxiliary signal can be transferred to the function area of auxiliary output without power. The wiring method is shown in Fig. 3.

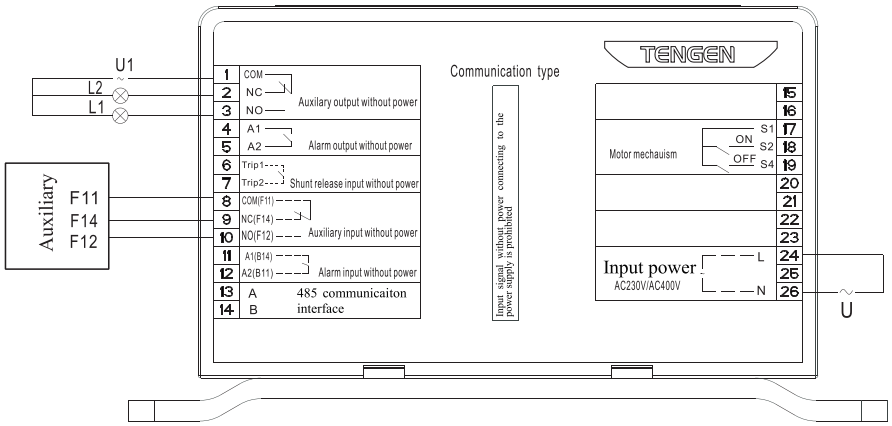

Fig. 3 Auxiliary and communication module wiring diagram

8.6.3.3 Function area of alarm input without power

The function area of alarm input without power receives the signal from the alarm accessory. Contacts 11 (B14) and 12 (B11) are connected to the NO contact B14 of alarm and the common contact B11, respectively. This function can transfer the alarm signal to the function area of alarm output without power. The wiring method is shown in Fig. 4.

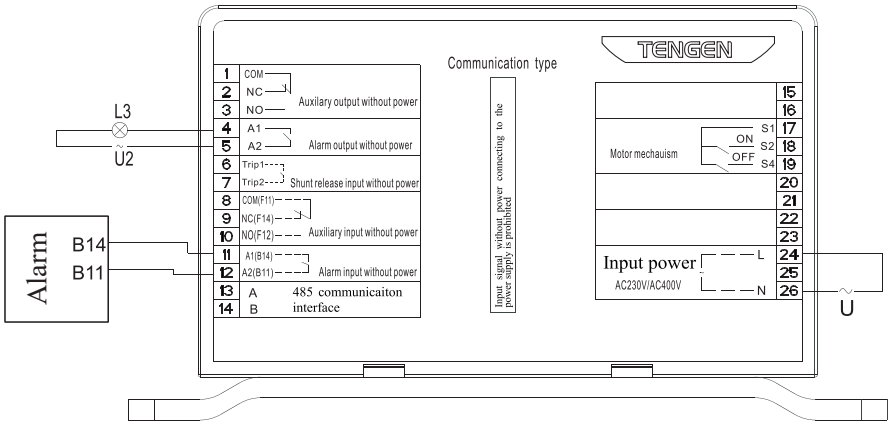

Fig. 4 Alarm and communication module wiring diagram

8.6.3.4 Function area of shunt input without power

The function area of shunt input without power can control the tripping action of circuit breaker. Contacts are 6 (Trip1) and 7 (Trip2), respectively; the wiring method is shown in Fig. 5. When the external shunt switch is on, the circuit breaker will execute the trip command.

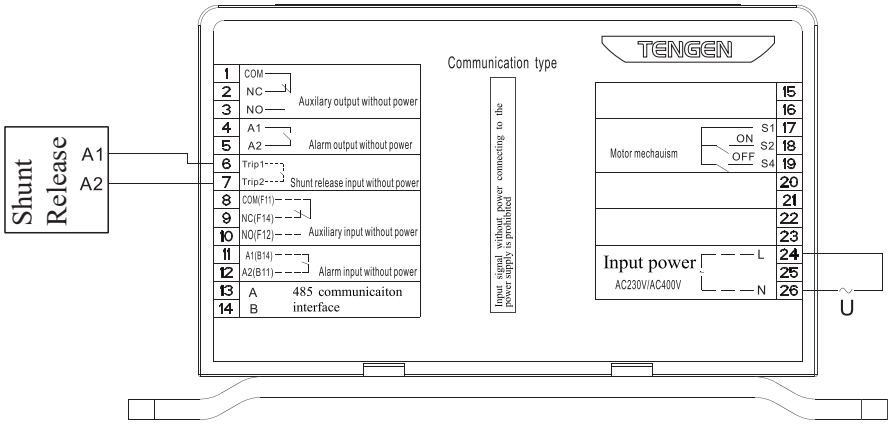

Fig. 5 Shunt and communication module wiring diagram

8.6.3.5 Function area of auxiliary output without power

The function area of auxiliary output without power receives the signal from the function area of auxiliary input without power to indicate the circuit breaker OFF/ON stat. Contact 2 means a NC contact, contact 3 means a NO contact, and contact 1 means a common contact. The ON indicator L2 and OFF indicator L1 are connected externally, as shown in Fig. 3. When the circuit breaker is normally closed, the indicator L2 is lit, and the indicator L1 is off; when the circuit breaker is off, the indicator L2 is off, and the indicator L1 is lit.

TGM1NE Series Moulded Case Circuit Breaker

8.6.3.6 Function area of alarm output without power

The function area of alarm output without power receives the signal from the function area of alarm input without power to indicate the circuit breaker trip state. The alarm indicator L3 is connected externally, as shown in Fig. 4. When the circuit breaker works normally, the indicator L3 is off; when the circuit breaker trips, the indicator L3 is lit.

8.6.3.7 RS485 communication function area

RS485 communication function area provides a communication interface for realizing the connection between the circuit breaker and the APP. The four-remote function of product can be realized through the host computer software by combining with accessories such as motor mechanism and auxiliary alarm: telemetering, telesignalling, telecontrol, and tele-regulation (only for communication type product). To realize this function, this communication module protocol shall be followed.

8.6.3.8 Side plate function area

The reset button Reset can reset the communication parameter function. When the luminous tube is green lit, this indicates normal standby; when it is blue lit, this indicates normal communication (for communication type).

8.6.3.9 Factory default communication parameters

Table 32

Communication protocol	Address	Baud rate	Data bit	Parity bit	Stop bit
Modbus-RTU	10	9600bps	8 bits	Even parity	1

8.6.4 Overload alarm non-trip module function area

8.6.4.1 Description of overload alarm non-trip module (see Fig. 6)

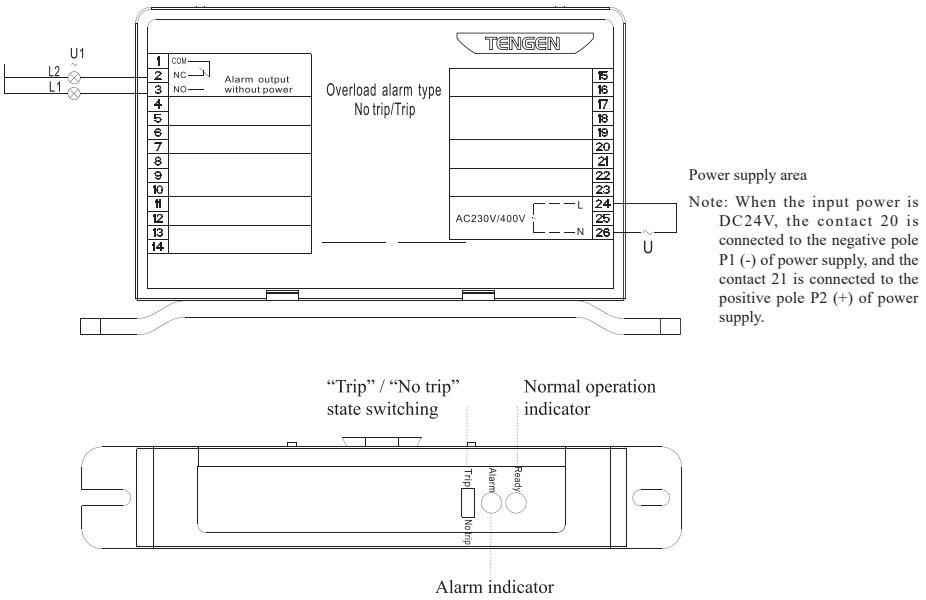

Fig. 6 Description of overload alarm non-trip module

8.6.4.2 Function area of alarm output without power

The function area of alarm output without power receives the signal from the body to indicate the circuit breaker alarm state. The contact 2 means a NC contact, the contact 3 means a NO contact, and the contact 1 means a common contact. When the circuit breaker works normally, the indicator L2 is lit and the L1 is off; when an alarm is issued from the circuit breaker, the indicator L2 is off, and the L1 is lit, as shown in Fig. 6.

8.6.4.3 Side plate function area

With the toggle switch function, the alarm trip [Trip] and alarm non-trip [No trip] can be switched, as shown in Fig. 6. When the luminous tube is green lit, this indicates normal standby; when it is red lit, this indicates alarm function.

8.6.5 Operation and With maintenance

8.6.5.1 Inspection and preparation before operation

The following inspections are required before operation:

1) Check whether the wiring connection is correct;

2) Confirm that all terminal connections are tightened firmly without loose terminal;

3) Mark sure that the phase insulation and live parts of product are not short circuited to the earth, and an appropriate distance between the circuit breakers shall be kept;

4 Confirm no both AC and DC power input.

8.6.5.2 Trial operation

1) Conduct the trial operation after confirming no abnormal situations according to all items specified in Article 8.6.5.1;

2) Selection of toggle switch before the shipment of module: Alarm trip (only for overload alarm type):

3) After power-on, the Ready indicator in the side plate function area green flashes; after the communication module is connected to circuit breaker, the Com. indicator is blue lit (for communication type);

4) After power-on, the Ready indicator in the side plate function area green flashes, and the red indicator is not lit; at this time no any alarm is issued (overload alarm type).

8.6.5.3 With maintenance

Inspection and With maintenance must be conducted by professional technician. To replace the communication module by user, please select the model specified by our company to ensure quality. Our company will bear any consequence caused by selection of other model not specified by our company or by modification without permission. Before With maintenance or With maintenance, please disconnect the connection with the module power supply (including circuit breaker circuit, and main circuit of communication module).

TGM1NE Series Moulded Case Circuit Breaker

9 Outline and Installation Dimensions

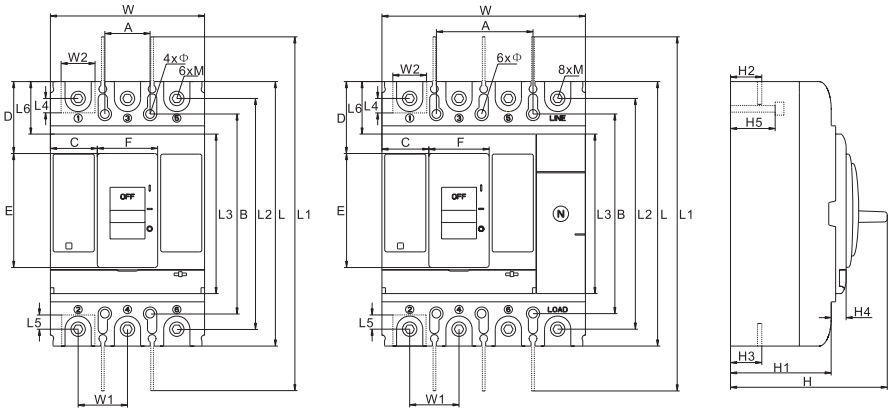

Outline and installation dimensions of product

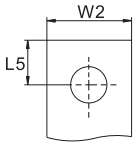

Copper bar insertion length for 100-800 shell frame

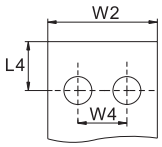

Copper bar insertion length for 1250/1600 shell frame

9.1 Outline dimensions of circuit breaker and size of hole on the panel

Table 33

Product spec.	Number of poles	Outline dimensions (mm)					Installation dimensions (mm)						
		W	L	L1	H	H1	C	D	E	F	L3	L6	H4
TGM1NE-100M/H TGM1NE-125M/H TGM1NE-160M/H	3	93	151	265	118	82	33	41	62	26	98	27.5	12
	4	123											
TGM1NE-250M/H TGM1NE-320M/H	3	107	165	300	118	86	39	49	61	29	96	34.5	8.5
	4	142											
TGM1NE-400M/H TGM1NE-630M/H	3	150	257	469	151	98	46	71	110	59	155	51	15
	4	198											
TGM1NE-630°M/H	3	181	270	478	158	103	61.5	81	108	58	161	54.5	14.5
	4	240											
TGM1NE-800M/H	3	212	281	494	160	103	75	83	105	60	176	52	15
	4	282											
TGM1NE-1250M/H	3	210	276	476	150	93	75	81	105	60	176	50	13
	4	280											
TGM1NE-1600M/H	3	210	340	555	195	136	66	115	105	78	210	74	16
	4	280											

TGM1NE Series Moulded Case Circuit Breaker

9.2 Wiring dimensions and installation dimensions of circuit breaker

Table 34

Product spec.	Number of poles	Outline dimensions (mm)									Installation dimensions (mm)			
		H2	H3	W1	W2	L2	L4	L5	M	W4	A	B	φ	H5
TGM1NE-100M/H TGM1NE-125M/H TGM1NE-160M/H	3	29	29	30	18	133	8.5	8.5	M8	/	30	129	5	28
	4										60			
TGM1NE-250M/H TGM1NE-320M/H	3	22.5	22.5	35	23	145	11.5	11.5	M8	/	35	126	5	60.5
	4										70			
TGM1NE-400M/H	3	39	38	48	33	224	12	11.3	M10	/	44	194	8.5	47
	4										94			
TGM1NE-630M/H	3	40.5	41.5	48	33	224	12	11.3	M10	/	44	194	8.5	47
	4										94			
TGM1NE-630°M/H	3	44	43	58	44	235	19	19	M12	/	58	200	7	45
	4										116			
TGM1NE-800M/H	3	41	45	70	45	243	15	13	M12	/	70	243	7	70
	4										140			
TGM1NE-1250M/H	3	28	36	70	46	243.5	13.5	13	M10	21.8	70	243	8	15
	4										140			
TGM1NE-1600M/H	3	41.5	57	70	51.6	310	15.4	15	M10	27	70	303	7	35
	4										140			

10 Circuit Breaker Protection Characteristic Curve

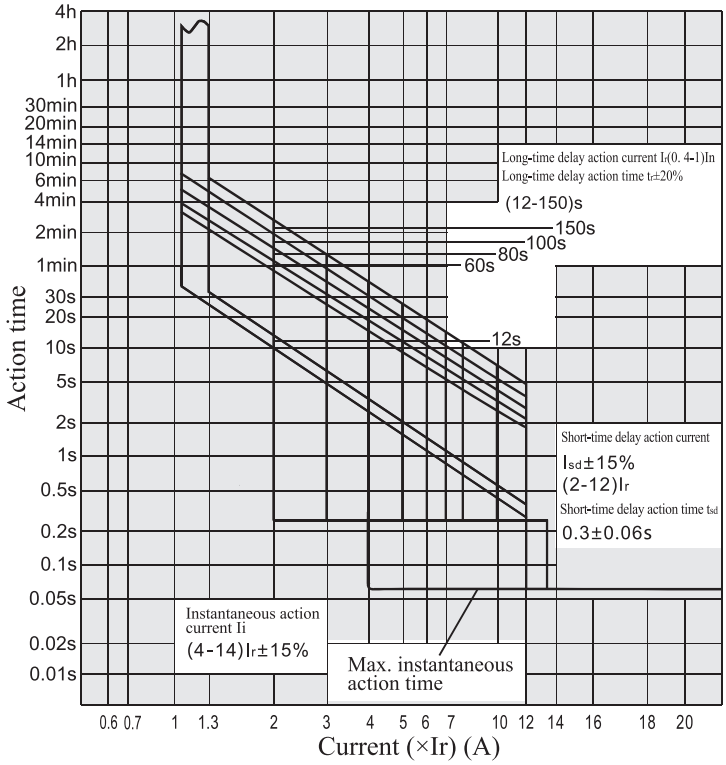

TGM1NE Series Moulded Case Circuit Breaker

11 Factory Settings of Release

Table 35

	Protection type		Distribution protection		Motor protection
4	Overload long-time delay	Setting current Ir(A)	In		
5		Delay tr(S)	60		100
6	Short-circuit short-time delay	Setting current Isd(A)	8Ir		10Ir
7	Short-circuit instantaneous	Setting current Ii(A)	Inm≤630A	12Ir	14Ir
			Inm≥800A	10Ir	
8 (Standard configuration for neutral pole protection, optional for others)	Neutral pole proteciton (E1)	Setting current Irn	1.0Ir		
	Grounding protection (E3)	Setting current Ig	1.0In		
	Communication type (E2)	/	/		
9	USB interface				

12 Appearance and Installation Dimensions of Plug-in Products

12.1 Installation dimension of plug-in type after plate

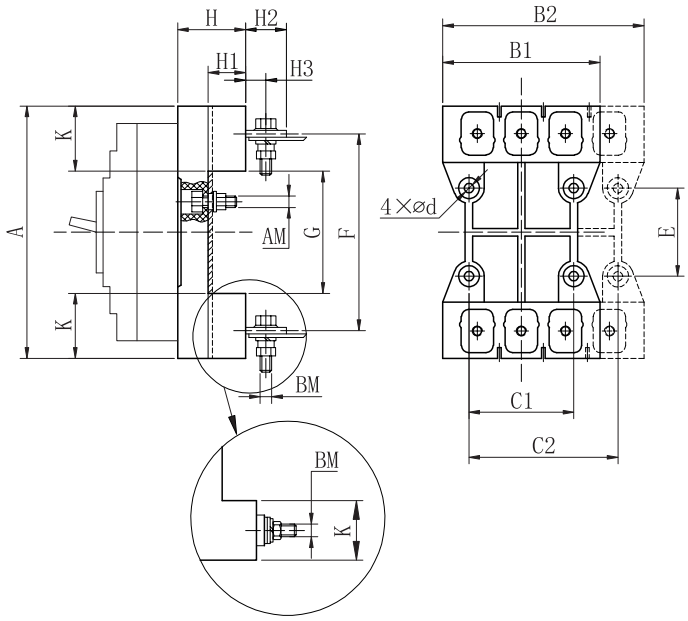

Note: 800 type wiring mode is shown in the figure

TGM1NE Series Moulded Case Circuit Breaker

12.2 Opening size of mounting plate (unit: mm)

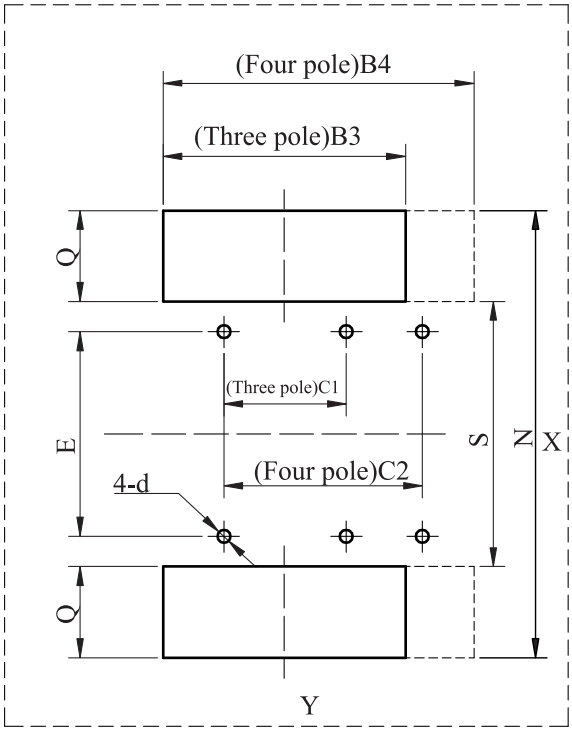

Table 36

Model	Outline and installation dimension (mm)																				
	A	B1	B2	C1	C2	E	F	G	K	H	H1	H2	H3	N	S	Q	B3	B4	AM	BM	4-d
TGM1NE-100 TGM1NE-125 TGM1NE-160	168	91	125	60	90	57	132	92	38	50	33	28	19	178	82	48	101	135	M6	M8	φ6.5
TGM1NE-250	186	107	145	70	105	54	145	94	46	50	33	37	20	196	84	56	117	155	M6	M8	φ6.5
TGM1NE-400 TGM1NE-630	280	149	200	60	108	129	224	170	55	60	38	46	24	290	160	65	159	210	M8	M12	φ8.5
TGM1NE-630^{S}	300	182	242	100	158	123	234	170	65	60	39	50	/	310	160	75	192	252	M8	M12	φ8.5
TGM1NE-800	305	210	280	90	162	146	243	181	62	87	60	22	/	315	171	72	220	290	M10	M14(T)	φ11

TGM1NE Series Moulded Case Circuit Breaker

12.3 Installation dimension of plug-in type in front of the board

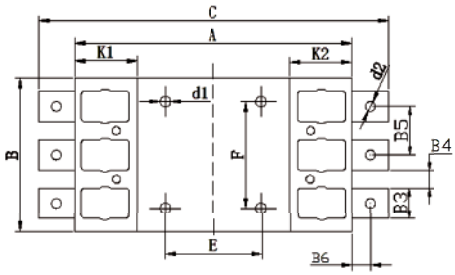

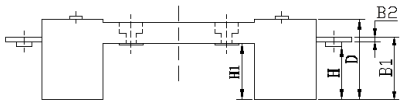

TGM1NE-100/125/160/250/320/ 630^{S}/800 Front panel plug-in outline drawing

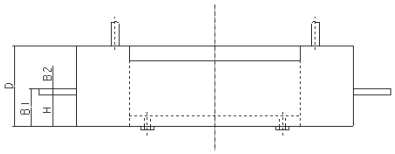

TGM1NE-400/630 Front panel plug-in outline drawing

Table 37

Model	Outline and installation dimension (mm)																	
	A	B	C	D	E	F	H	H1	K1	K2	d1	d2	B1	B2	B3	B4	B5	B6
TGM1NE-100 TGM1NE-125 TGM1NE-160	172	95.5	214	50	61	66	12.5	35	38	38	ø7	M8	18	3	19	10.5	30.5	10.5
TGM1NE-250	183	110	259	52	64	70	42	35	44	44	ø7	M10	48	3	22	13	35	22.5
TGM1NE-400 TGM1NE-630	276	150	351	80	135	115	31	/	/	/	ø7	ø11	37	6	25	22.5	48	22
TGM1NE-630^{S}	297	179	397	85	123	100	21	65	64	64	ø8.5	ø13	29	8	35	23	58	34
TGM1NE-800	305	210	409	87	144	90	13	61	62	62	ø11	ø13	21	8	35	35	70	35

13 Ordering Notice

Please specify when ordering: product model, specification, number of poles, accessory, protection feature, rated current, and order quantity.

For example: To order TGM1NE-400, three-pole, circuit breaker with M type breaking capacity for power distribution protection, rated current 400A, 200 pcs.

Specify: TGM1NE-400M/3300 400A (160-400) A adjustable 200 pcs.

For any special requirements (if any) of circuit breaker, please contact the manufacturer for determination through negotiation.

TGM1NE Series Moulded Case Circuit Breaker

14 Product Model

TGM1NE	–	125	M	Z	/	4	3	0	2	A	Ⅲ	E1	125	AC230V	B	Plateau
Product model		Current section	Breaking capacity	Operating method		Number of poles	Trip way	Internal accessories	Usage	Pole N code	Alarm module	Controller code	Rated current	Ac cessory voltage	Installation method	Application
TGM1NE moulded case circuit breaker		100: 100A 125: 125A	M: Higher breaking capacity type	Default: Direct oper ation		3: 3 -pole	3: Electronic type	00: No accessory 10: Shunt release 20: Aux. contact 30: Undervoltage release 40: Shunt + Auxiliary	Default: Power distribution protection	A: Three protective poles; zero line is not disconnected together with other poles	Default: Overload alarm trip	Default: Common four-button controller	100: 32A 63A 100A 125: 32A 63A 125A	AC380/400V AC220/230V DC220V DC110V DC24V	Default: Fixed before-plate	Default: Common application
		160: 160A 250: 250A	H: High breaking capacity type	Z: Operation by rotatory handle		3N:3P+N		50: Shunt + Undervoltage 60: Two sets of auxiliary contacts 70: Undervoltage + Auxiliary 08: Alarm contact	2: Motor prot ection	B: Three protective poles; zero line is di sconnected together with other poles	III : Overload alarm non-trip	E1: Neutral pole protection controller	160: 63A 125A 160A 250: 200A 250A	When there are various accessory voltages, (such as shunt AC230V, undervoltage AC400V)	C: Plug-in back-plate	Plateau Moist heat Environmental protection Salt mist Low temperature
		320: 320A 400: 400A		P: Motor operation		4: 4 -pole		18: Shunt + Alarm 28: Auxiliary + Alarm 38: Undervoltage + Alarm 48: Shunt + alarm + auxiliary		C: Four protective poles; zero line is disconnected together with other poles		E2: Communic ation type controller	320: 200A 250A 320A 400: 300A 315A 400A		F: Plug-in before-plate	
		630: 630A 800: 800A						68: Two sets of auxiliary + alarm 78: Undervoltage + auxiliary + alarm		D: Four protective poles; zero line is not disconnected together with other poles		E3: Grounding type controller	630: 400A 500A 630A 800: 630A 800A			
		1250: 1250A 1600: 1600A											1250: 800A 1000A 1250A 1600: 1250A 1600A			

TGM1E Series Moulded Case Circuit Breaker-LCD Type

1 Overview

TGM1E series moulded case circuit breaker- LCD type is used in the AC 50/60Hz circuit with the rated voltage 400V and with rated current up to 800A for line protection, and it is also used for infrequent start, overload, short circuit and voltage failure protection of the motor.

The product has protection functions such as long delay, short circuit short delay, short circuit instantaneous, overvoltage, undervoltage, phase loss and thermal simulation. The controller adopts high precision electronic release, the voltage, current and fault information can be displayed in real time, and each parameter can be adjusted, viewed, and set.

The product is equipped with one-way RS485 standard interface in line with the "Communication Protocols for Low-voltage Moulded Case Circuit Breakers - No Leakage Protection" (DLT 645).

The product is equipped with one-way external control opening passive interface, and short circuiting the interface can make the circuit breaker open immediately;

The overload alarm output contact function is optional, and the circuit breaker will output a set of passive contacts for the user to connect to the alarm device when the line is overloaded if this function is selected.

Except for 3P+N, the circuit breaker with other poles has the isolation function, and the symbol is .

2 Type Designation

TG M 1 E - □□□/□□□□□□□□

- Installation method (default: Fixed type front-panel; C: Plug-in type back-panel; F: Plug-in type front-panel)
- Controller function code (Y1: LCD controller)
- Prepaid code (default: No prepaid function; F: Prepaid function)
- 3N, 4P product N pole code (see Table 2)
- Application code (Default: Power distribution protection, 2: Motor protection)
- Accessory code (see Table 1)
- Trip method code (3: Electronic type)
- Code of number of pole (3: Three poles, 3N: Three poles and four wires, 4: Four poles)
- Operation method code (default: direct operation via handle; Z: Rotary rotating handle)
- Short circuit breaking capability level (M: Medium breaking type, H: high breaking type)
- Frame rated current (A)
- Electronic type
- Design code
- Moulded case circuit breaker
- Enterprise code

TGM1E Series Moulded Case Circuit Breaker-LCD Type

Table 1

Accessory type (left-mounted)	Code
No contact	00
Alarm contact	08
Shunt release	10
Aux. contact	20
One set of aux. contacts + One set of alarm contacts	28
Two sets of aux. contacts	60

Table 2

Wiring method	
Type A	N pole is not equipped with an overcurrent trip element, and N pole is always powered on, and is not closed and open together with other three poles
Type B	N pole is not equipped with an overcurrent trip element, and N pole is closed and open together with other three poles (N pole is closed and then open)
Type C	N pole is equipped with an overcurrent trip element, and N pole is closed and open together with other three poles (N pole is closed and then open)
Type D	N pole is equipped with an overcurrent trip element, and N pole is always powered on, and is not closed and open together with other three poles

3 Operating Conditions

3.1 The ambient air temperature is -5°C ~ +40°C;

3.2 The altitude of the installation site does not exceed 2000m;

3.3 The relative humidity of the air at the installation site does not exceed 50% at +40°C, and a higher relative humidity can be allowed at a lower temperature, such as up to 90% at +20°C. Protective measures are taken for condensation occurred occasionally due to temperature changes;

3.4 The pollution degree is 3;

3.5 The installation category is Class III for main circuit, and is Class II for aux. circuit and control circuit not connected to the main circuit.

3.6 The circuit breaker should be installed in a place where there is no explosion hazard and no conductive dust sufficient to cause metal corrosion and damage to the insulation;

3.7 The circuit breaker should be installed in a place where there is no rain or snow attacks.

3.8 The external magnetic field of the installation site shall not exceed 5 times of the geomagnetic field in any direction.

TGM1E Series Moulded Case Circuit Breaker-LCD Type

4 Description of Circuit Breaker

4.1 3P Circuit Breaker Wiring Description

As shown in Fig. 1 below, the "1", "3", and "5" on the product are wire inlets. For 3P product with an auxiliary power neutral line N, the neutral line N of the auxiliary power supply shall be connected to the neutral line of the power supply before use, otherwise the product cannot normally defect the power voltage.

Note: The 3P product with the auxiliary power supply neutral line N can detect the r phase voltage value and the line voltage value of the power supply, and the 3P product without the power supply neutral line N can detect the line voltage only.

No auxiliary power neutral line N **With auxiliary power neutral line N**

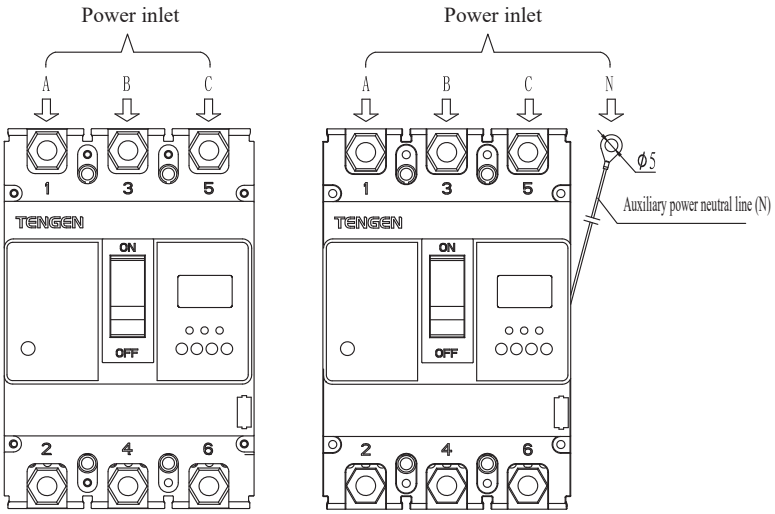

Fig. 1

4.2 Description of Panel and External ports of Controller of Circuit Breaker

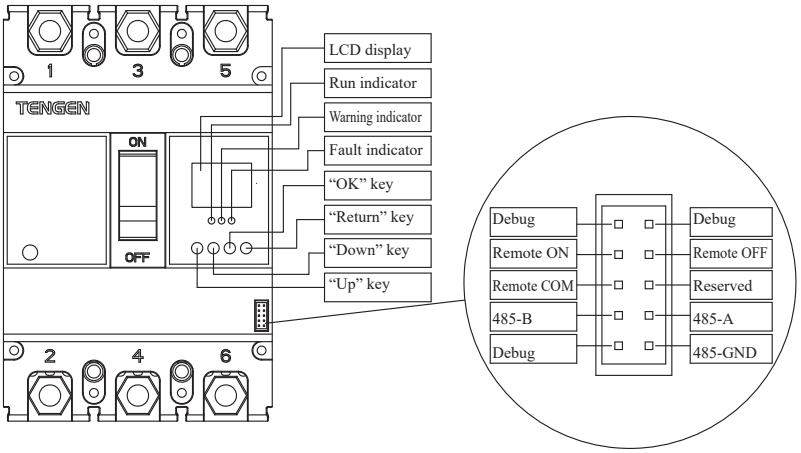

Fig. 2

4.2.1 Description of indicators on the panel

♦ "Run" indicator (green): It will flicker during the normal operation of the product;

♦ "Warning" indicator (yellow): When the current exceeds 0.9 IR1, the warning indicator will flicker, and is off when there is no warning;

♦ "Fault" indicator (red light): This light is flickering when the alarm function is enabled and there

is a voltage or current fault; this light will be always on when the trip function is enabled and the product trips due to voltage or current fault, and it will be off during the normal operation of the product.

4.2.2 Description of normal port

- Remote control OFF port: It is a passive interface. The circuit breaker will open when the "remote COM" and "remote OFF" are turned on, and will automatically be closed when the "remote COM" and "remote ON" are turned on (the controller and external control lead wire shall be customized, and the motor mechanism is required)
- Debugging: This port is for factory calibration only, and cannot be connected to other devices by users.

Note: If the customer requires the remote ON function, this shall be specially indicated when ordering.

5 Technical Parameters

5.1 The product parameters are listed in Table 3 and Table 4.

Frame rated current (A)	250		400		630		630 Large size		800	
Rated current spec. I_{R1} (A)	100~250 adjustable		160~400 adjustable		250~630 adjustable		250~630 adjustable		When In is 800A: 315~800 adjustable; When In is 630A: 250~630 adjustable	
	Range 1A									
Rated operating voltage Ue (V)	AC400									
Frequency (Hz)	50/60									
Rated insulation voltage Ui (V)	1000									
Rated impulse withstand voltage Uimp (kV)	8		12							
Breaking capacity	M	H	M	H	M	H	M	H	M	H
Icu (kA)	50	85	70	100	70	100	70	100	70	100
Icu (kA)	50	50	70	70	70	70	70	70	70	70
Number of poles	3P, 3P+N, 4P									
Isolation function	3P, 4P: Yes; 3P+N: No									
Use category	A		B							
Rated short time withstand current Icw (kA)/1s	3		10		10				10	
Flashover distance (mm)	≤ 50		≤ 100							
Long delay reverse time limit protection characteristics	See 5.2									
Short circuit short delay protection characteristics (IR2)	Short delay protection setting value: 2~12IR1 adjustable, range 1; charateristics see Table 7									
Short circuit instantaneous protection characteristics (IR3)	Instantaneous protection setting value: 4~14IR1 adjustable, range 1; charateristics see Table 8									
Overvoltage protection characteristics	Voltage action value: Phase voltage 253~286V (line voltage 437~494V) adjustable, range 1V; the action delay time can be turned off: 1-30s adjustable, range 1s									
Undervoltage protection characteristics	Voltage action value: Phase voltage 154~187V (line voltage 266~323V) adjustable, range 1V; the action delay time can be turned off: 1-30s adjustable, range 1s									
Phase loss protection characteristics	When any phase voltage line at the inlet terminal of the circuit breaker except for N pole is disconnected, the circuit breaker will trip immediately with action time ≤1s									
Communication port	1-way RS485 interface									
Remote OFF port	Standard remote OFF control port (passive port, short circuited to cause OFF									
Communication protocol	Communication Protocols for Low-voltage Moulded Case Circuit Breakers - No Leakage Protection (DL/T 645)									
Communication paud rate	2400, 4800, 9600, 19200, and 38400 five gears adjustable									
Overload alarm no-trip contact output	Optional; for product with this optional function, when the line is overloaded, one passive contact can be closed to connect to the alarm devcie (contact output capacity is 3A/AC220V), and the default length of the alarm lead wire is 300mm.									

TGM1E Series Moulded Case Circuit Breaker-LCD Type

5.2 Long Delay Operation characteristics

5.2.1 Long delay operation characteristics of power distribution type

Table 4

Operation characteristics		Trip time (t1)			
1.05 I_{R1}		No operation within 2 hours			
1.3 I_{R1}		Operation within 1 hour			
Operation time gear at 2 I_{R1}	250A	12s	60s	80s	100s
	400-800A	12s	60s	100s	150s

Note: IR1 is the rated current setting value of circuit breaker.

5.2.2 Long delay operation characteristics of motor type

Motor protection type 250A frame

Table 6

Operation characteristics	Trip time (t1)			
1.05 I_{R1}	No operation within 2 hours			
1.2 I_{R1}	Operation within 1 hour			
1.5 I_{R1}	21.3s	107s	142s	178s
2 I_{R1}	12s	60s	80s	100s
7.2 I_{R1}	0.93s	4.63s	6.17s	7.72s
Trip level	/	10A	10	20

Motor protection type 400 ~ 800A frame

Table 6

Operation characteristics	Trip time (t1)			
1.05 I_{R1}	No operation within 2 hours			
1.2 I_{R1}	Operation within 1 hour			
1.5 I_{R1}	21.3s	107s	178s	267s
2 I_{R1}	12s	60s	100s	150s
7.2 I_{R1}	0.93s	4.63s	7.72s	11.6s
Trip level	/	10A	20	30

Note: I_{R1} is the rated current setting value of circuit breaker.

5.3 Short Circuit Short Delay Operation Characteristics

Table 7

Operation characteristics	Trip time (t2)				
$I_{R2} \leq I < 1.5I_{R2}$	Reverse time limit, $T=(1.5*I_{R2}/I)^2*t2$, ±20%				
$1.5I_{R2} \leq I < I_{R3}$	Time s	0.06	0.1	0.2	0.3
	Tolerance s	±0.02	±0.03	±0.04	±0.06

Notes: I_{R2} is the short delay operating current setting value of circuit breaker, I_{R3} is the instantaneous operating current setting value of circuit breaker, T is the inverse time operation time, t2 is the short delay operation time setting value, and I is the actual current of the protected circuit.

5.4 Short Circuit Instantaneous Operation Characteristics

Table 8

Operation characteristics	Trip time (t1)
$I \leq 0.85I_{R3}$	No operation
$I \geq 1.15I_{R3}$	< 0.08s

Note: I_{R3} is the instantaneous operation current setting value of circuit breaker.

TGM1E Series Moulded Case Circuit Breaker-LCD Type

5.5 Power Distribution Type Current Operation Characteristic Curve

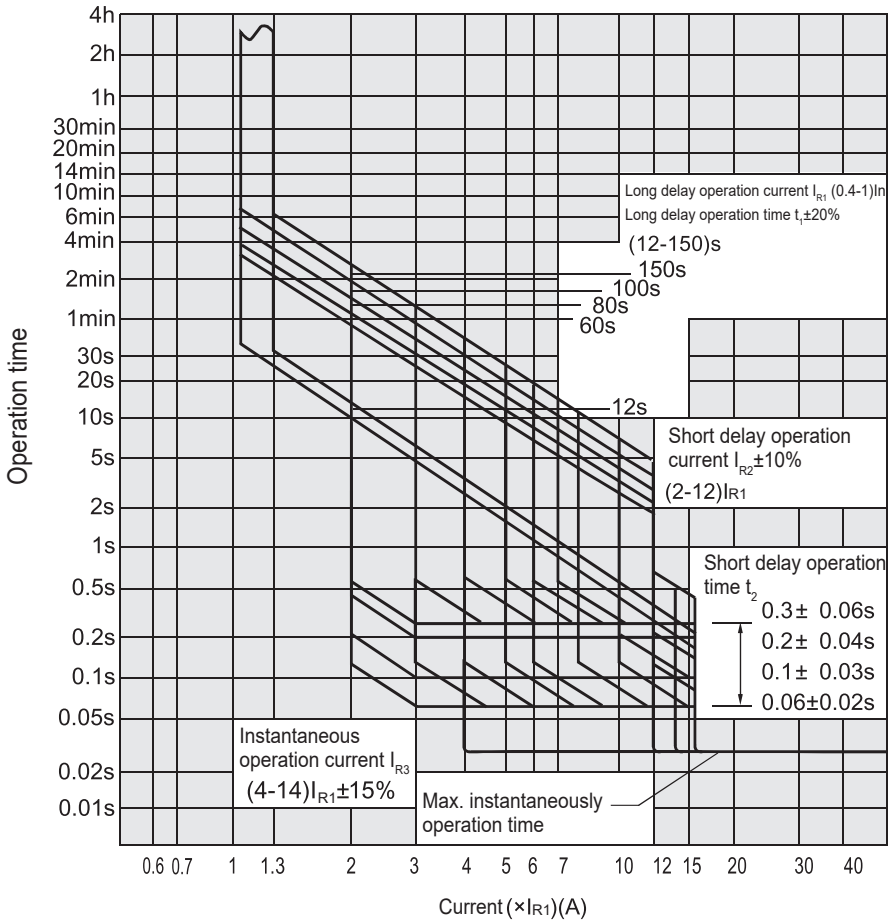

Fig. 3

6 Default Setting Values of Factory Parameters of Conventional Product

Table 9

No.	Parameter setting value	
1	Overload long delay setting	Current (IR1): 1In; protection function state: Trip
		Delay time (t1): 60s
2	Short circuit short delay setting	Current (IR2): 6IR1; protection function state: Trip
		Delay time (t2): 0.3s
3	Short circuit instantaneous setting current	10IR1; protection function state: Trip
4	Overvoltage protection setting	Operation value: 280V (phase voltage) for 4P product, and for 3P product with an auxiliary netrual line; 480V (line voltage) for 3P product without an auxiliary netrual line
		Protection function state: Trip; delay time: 3s
5	Undervoltage proteciton setting	Operation value: 160V (phase voltage) for 4P product, and for 3P product with an auxiliary netrual line; 275V (line voltage) for 3P product without an auxiliary netrual line
		Protection function state: Alarm; delay time: 3s
6	Phase loss protection setting	Protection function state: Alarm
7	Communication paud rate	2400
8	Communication address	1

TGM1E Series Moulded Case Circuit Breaker-LCD Type

7 Derating Coefficient under Different Temperature

Table 10

Product model	Power current (A)	Ambient temp.						
		0°C	45°C	50°C	55°C	60°C	65°C	70°C
TGM1E-250	250	1In	1In	1In	0.9In	0.85In	0.81In	0.78In
TGM1E-400	400	1In	1In	1In	0.9In	0.85In	0.81In	0.78In
TGM1E-630/630 Large size	630	1In	1In	1In	0.94In	0.9In	0.87In	0.86In
TGM1E-800	800	1In	1In	1In	0.93In	0.82In	0.8In	0.78In

8 When the Product Application Altitude Exceeds 2000m, the Electrical Property shall be Corrected according to the Table Below

Table 11

Altitude (m)	2000	2500	3000	4000	5000
Power frequency withstand voltage (V)	3000	3000	2500	2000	1800
Insulation voltage (V)	1000	800	700	600	500
Operating current correction coefficient	1In	1In	0.94In	0.88In	0.85In

9 Recommended Values for Selection of Wire Specification

Table 12

Rated current In (A)	125	160	250	320	400
Sectional area of wire (mm^2)	50	70	120	185	240

Rated current In (A)	Cable		Copper busbar	
	Sectional area (mm_2)	Qty.	Dimensions (mm*mm)	Qty.
630	185	2	40×5	2
800	240	2	50×5	2

10 Recommended Values of Tightening Torques of the Inlet and Outlet Cable/ Copper Busbar of Different Frame

Table 13

Rated current (A)	Front-panel/Back-panel wiring torque (N.m)
250	8.8 ~12
400/630	17.7 ~ 22.6
630 Large size	28 ~ 33
800	28 ~33

TGM1E Series Moulded Case Circuit Breaker-LCD Type

11 Accessories

Please specify whether the lead-out wire of the internal accessory of the product is equipped with a wiring terminal block when ordering. If no wiring terminal block is required, the length of the exposed lead wire shall be indicated.

11.1 Shunt release (left-mounted)

Shunt release	Rated control power voltage (Us)	AC: AC220/230V, AC380/400V DC: DC24V
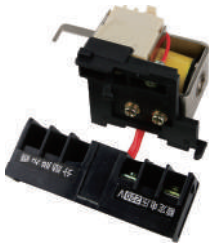	Operation voltage	(0.7 ~ 1.1) Us
	Wiring diagram: 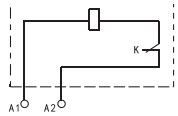 Power input	Note: K – The micro switch connected to the coil in series in the shunt release is a normally closed contact. When the circuit breaker is powered off, this contact will be disconnected automatically, and is closed when power-on.
When the shunt release with the control power supply of DC24V is used, the impedance of the two power supply leads of the control shunt release should not be too large, the length of a single lead wire with a diameter of 1.5mm2 should not exceed 150m, the length of a single lead wire with a diameter of 2.5mm2 should not exceed 250m, and the wire diameter size of the control lead should be increased for a longer-distance control circuit, and the power supply power of the control shunt release should not be less than 50W.		

11.2 Aux. Contact (Left-Mounted)

Alarm contact	Frame rated current	Inm ≤ 320A		Inm ≥ 400A	
	Conventional thermal current Ith	3A		6A	
	Use category	AC-15	DC-13	AC-15	DC-13
	Operating voltage	AC380V/415V	DC110V/250V	AC380V/415V	DC110V/250V
	Rated operating current	0.3A	0.15A	1A	0.15A
	Wiring diagram: 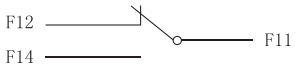 Circuit breaker in the "OFF" and "Free Trip" state 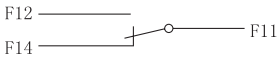 Circuit breaker in the "ON" state				

11.3 Alarm Contact

Aux. switch	Conventional thermal current Ith	250:3A 400-800:6A
	Rated operating current Ie	Same as aux. contact
	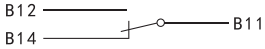 Circuit breaker in the Free Trip (Alarm) state	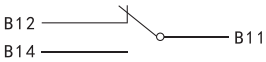 Circuit breaker in the "OFF" and "ON" state

TGM1E Series Moulded Case Circuit Breaker-LCD Type

11.4 Rotary Manual Operating Mechanism

The outline and installation dimensions icons of rotary handle are shown below:

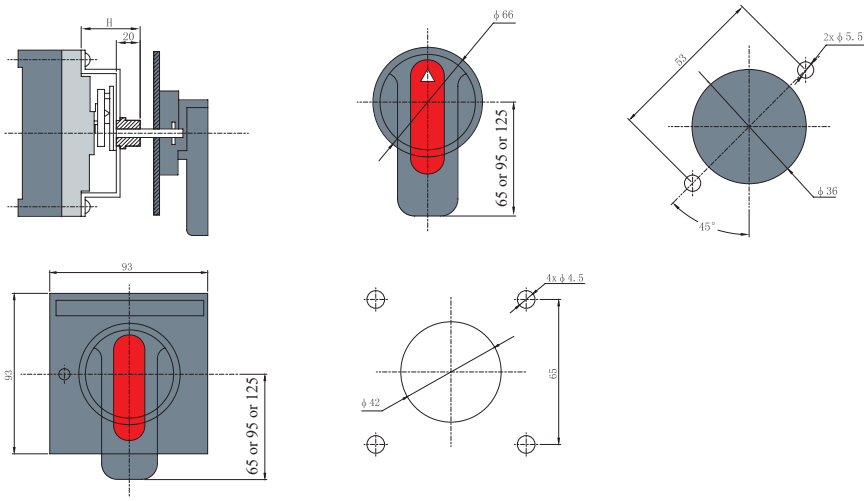

Outline and installation dimensions of rotary handle

Model & Spec.	TGM1E-250	TGM1E-400/630	TGM1E-630 large size	TGM1E-800
Installation dimensions (H)	60	89	88	92

11.5 Motor Mechanism

11.5.1 Motor mechanism wiring diagram

Input voltage	AC220V/230V, AC380V/400V
Wiring diagram	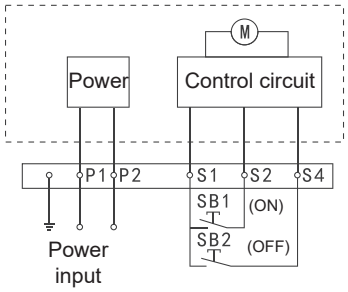 Description: P1 and P2 are external power inputs SB1 and SB2 are operating buttons (provided by user) *Note: The wiring diagram of the internal accessories of the motor mechanism is shown in the dashed box.

TGM1E Series Moulded Case Circuit Breaker-LCD Type

11.5.2 Outline and installation dimensions of motor mechanism

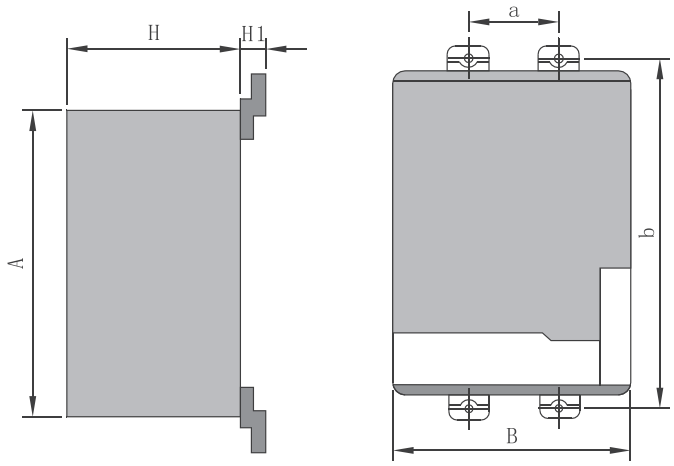

Model	A	B	H	H1	a	b
TGM1E-250	116	90	77	18	35	143
TGM1E-400/630	176	130	115	34	44	194
TGM1E-630 Large size	176	130	115	28.5	58	200
TGM1E-800	176	130	115	35	70	243

12 Outline and Installation Dimensions of Circuit Breaker

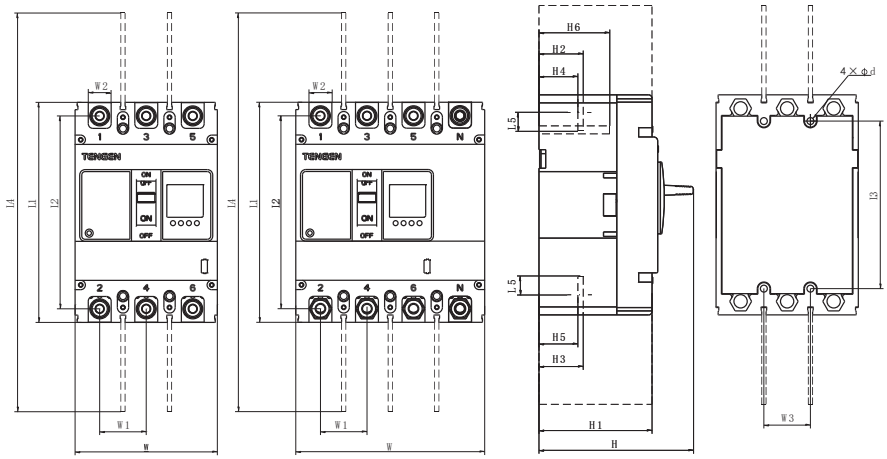

Note: The arc isolating sheet is marked by dashed line.

TGM1E Series Moulded Case Circuit Breaker-LCD Type

Product model	Number of poles	Outline dimensions												Installation dimensions				
		L1	L4	W	W1	W2	H	H1	H2	H3	H4	H5	L2	L3	L5	W3	H6[1]	ϕd
TGM1E-250M	3	165	290	107	35	23.5	117.5	85.5	22.5	22.5	18.5	18.5	146	126	12	35	60.5	4.8
	4			142												70		
TGM1E-250H	3			107												35		
	4			142												70		
TGM1E-400M	3	256	456	150	48	33	153	97.7	39	37.5	34.5	34.7	224	194	12	44	47	8.5
	4			198												94		
TGM1E-400H	3			150												44		
	4			198												94		
TGM1E-630M	3	256	456	150	48	33	153	97.7	40	41	34.5	34.7	224	194	12	44	47	8.5
	4			198												94		
TGM1E-630H	3			150												44		
	4			198												94		
TGM1E-630 M/H 大体积	3	270	478	181	58	44	157	103	45	44	39	39	236	200	17	58	52	7
	4			240												116		
TGM1E-800M	3	280	482	211	70	45	160	104	41	46	34.5	32.4	243	243	15	70	70	7
	4			282												140		
TGM1E-800H	3			211												70		
	4			282												140		

Note 1: H6 refers to the depth of the mounting screw hole of the product.

13 Handle Position and Panel Size of Circuit Breaker

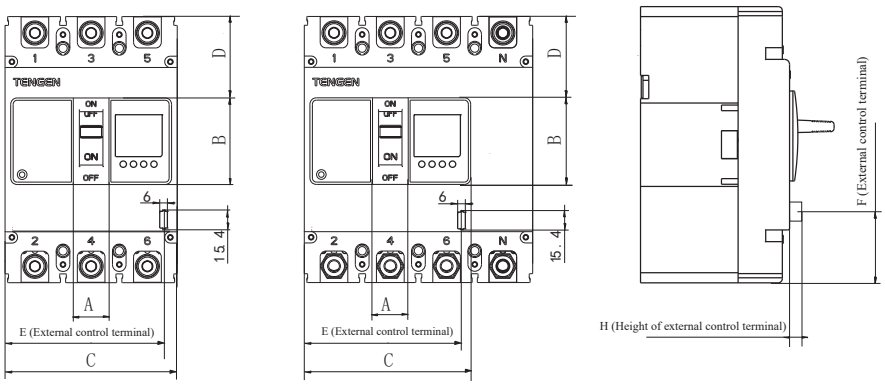

Product model	A	B	C	D	E	F	H
TGM1E-250	22.5	54	107	50.6	102	42	8
TGM1E-400/630	59	101.5	150	105	144	56	8
TGM1E-630 Large size	65	102	181	84	161	60	8
TGM1E-800	65	106	211	81	185	67	8

TGM1E Series Moulded Case Circuit Breaker-LCD Type

14 Outline and Installation Dimensions of Plug-in Type

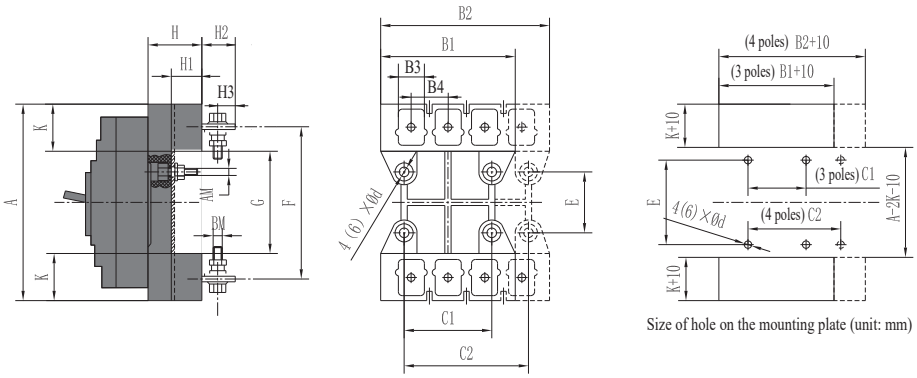

Product model	Outline and installation dimensions (mm)																	
	A	B1	B2	B3	B4	C1	C2	E	F	G	K	H	H1	H2	H3	AM	BM	Φd
TGM1E-250	186	107	145	22	34	70	105	54	145	94	46	50	33	37	18	M6	M8	6.5
TGM1E-400/630	280	149	200	31	48	60	108	129	224	170	55	60	38	46	22	M8	M12	8.5
TGM1E-630 Large size	300	182	242	/	/	100	157	123	232	170	65	60	39	49	24	M8	M12	8.5
TGM1E-800	305	210	280	/	71	90	162	146	242	181	62	87	60	22	/	M10	M14	11

15 Operation and Maintenance

According to the size of load current, the user can select the circuit breaker with appropriate current specifications and set the circuit breaker to the appropriate current level;

Although this circuit breaker has the capacity to resist surge voltage, it is recommended to install arresters or surge protectors at the inlet and outlet ends of the circuit breaker for applications with frequent lightning and high impulse voltage energy;

The installation and maintenance of this circuit breaker shall be conducted by the professionals. It is strictly prohibited to operate the circuit breaker with wet hands, otherwise electric shock accidents may occur;

After the circuit breaker trips due to a fault, please find out the fault cause with reference to the controller failure indications and fault records, and then power on it.

16 Model Selection instructions

16.1 TGM1E-250M/3N300A Y1 250A:

This means to order a TGM1E series 250A shell frame, 50kA (medium type), rated current 250A three-pole four-wire (that is 3P+N), neutral line without protection, electronic circuit breaker for power distribution protection.

16.2 TGM1E-250M/33002 Y1 250A:

This means to order a TGM1E series 250A shell frame, 50kA (medium type), rated current 250A three-pole electronic circuit breakers for motor protection.

Note: To order special customized products, please consult our company in advance.

TGM1P Series Moulded Case Circuit Breaker with Electric Motor Operating Machanism

1 Overview

series moulded case circuit breaker (hereafter referred to as ECB) is suitable for power distribution system. It is a mechanical switch used to make, carry, and break current under normal circuit conditions and to make and carry current for some time and break current under specified abnormal circuit for protection of lines and equipment in case of overload or short circuit of power distribution line.

This series circuit breaker has overload and short-circuit protections and motor electric operating mechanism, and there are manual and electric models available.

It is equipped with a locking system to ensure safety during With maintenance and to prevent disconnection by customer.

It has a cage wiring terminal for convenient wiring by customer.

It has a threaded sealing plug and a protective cover, with a seal strip provided to prevent removal by customer without permission.

With isolation function, the corresponding symbol is ⊸ ⊸ .

Standard: IEC 60947-1, IEC 60947-2, SEC Power Company Technical Specifications.

2 Type Designation

TG M 1 P – □

- □ — Frame current
- P — Electric motor operating machanism
- 1 — Design code
- M — Moulded case circuit breaker
- TG — Enterprise code

3 Technical Parameters

3.1 Basic parameters of ECB

Table 1

Basic parameters				
Frame current		250	400	630
Rated operating voltage Ue(V)		AC230, AC400/415V		
Rated insulation voltage Ui(V)		800		
Rated impulse withstand voltage Uimp(kV)		8		
Rated frequency Hz		AC（50/60）Hz		
Rated current In(A)		125/160/200/225/250	250/315/350/400	500/600
Short-circuit protection setting value Ii		10In		
Rated limit short-circuit breaking capacity Icu(kA)	AC230V	25	25	40
	AC400V	20	20	65
Rated operate short-circuit breaking capacity Ics(kA)	AC230V	25	25	40
	AC400V	20	20	65
Working Environment		+55℃		

TGM1P Series Moulded Case Circuit Breaker with Electric Motor Operating Machanism

Table 1, Continue

Basic parameters			
Applicable working environment temperature	-10℃ ～ +75℃		
Usage category	A		
Flashover distance (mm)	≤50	≤100	≤100
Mechanical life (times)	7000	4000	4000
Electrical life (times)	1000	1000	1000
Trip method	Thermal magnetic trip		
	Single magnetic trip		

3.2 Basic parameters of motor

Table 2

Model	TGM1P-250	TGM1P-400	TGM1P-630
Rated control circuit voltage (V)	AC230V		
Starting power (W)	50	70	/
Normal operating power (W)	12	19	/

3.3 Wiring diagram of control part

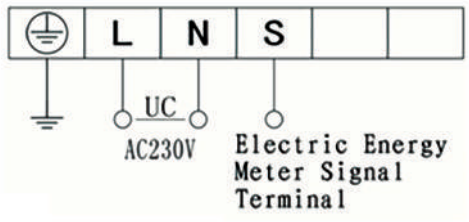

① Input power voltage: AC230V.

② The meter outputs AC250V/1A signal to disconnect circuit breaker.

3.4 ECB control logic

Table 3

Operating mode	Function	Operation method	ECB state after operation	Meter relay signal status	Window indication color
For the first installation, the product is at the trip position			TRIP	NC	White
	Manual operation from trip to open	Turn the operating handle counterclockwise	OFF	NC	Green
	Manual operation from open to closed	Turn the operating handle clockwise	ON	NC	Red
	After installation, when the user's signal line is disconnected, ECB shall open if the meter signal is a closing signal.				
Manual mode	Manual operation from closed to open	Counterclockwise manual operation	OFF	NC	Green

TGM1P Series Moulded Case Circuit Breaker with Electric Motor Operating Machanism

Table 3, Continue

Operating mode	Function	Operation method	ECB state after operation	Meter relay signal status	Window indication color
Manual mode	When the meter relay issues a remote closing command, ECB shall be still in the open state rather than closed state	Meter relay issues a remote closing command	OFF	NC	Green
	The intelligent meter relay command is a closing command to allow the ECB is manually operated to the closing state from the open state	Turn the operating handle clockwise	ON	NC	Red
	The intelligent meter relay issues a remote open command to open the ECB from the closed state	Meter relay issues a remote open command	OFF	NO	Green
	The intelligent meter has issued an opening command for manual closing operation at this time, and ECB shall open automatically after 5 seconds	Turn the operating handle clockwise	OFF after 5-sec (min.)	NO	Green
	The opening command issued remotely from the intelligent meter becomes a closing command, and the original opening state of ECB is unchanged	Meter relay issues a remote closing command	OFF	NC	Green
	When the meter relay signal is at the closed state, ECB will be closed automatically when the manual mode is switched to the auto mode.	Turn the manual/auto transfer switch from left to right	ON	NC	Red
	When the meter relay issues a closing signal, with a test button pressed, ECB will trip	Press the test button with a tool	TRIP	NC	White
	Remote two-step re-trip command is not allowed for closing after trip	Operate the relay to issue an open signal and then a closed signal	TRIP	NC	White
	Meter relay signal is at the open state; ECB is at the locked state from the unlock state, ECB trips	Operate #660 key	TRIP	NO	White
Auto mode	Meter relay controls auto opening state remotely	Meter relay signal becomes the open state from the closed state	OFF	NO	Green
	Manually operate for closing; at this time the intelligent meter relay is at the open state, and ECB will open automatically after 5 seconds	Turn the operating handle clockwise in the manual mode	OFF after 5-sec (min.)	NO	Green
	Meter relay will be closed remotely and automatically	Meter relay signal becomes the closed state from the open state	ON	NC	Red
	The intelligent meter remote command is a closed command, with test button pressed for tripping	Press the test button with a tool	TRIP	NC	White
	When the meter relay signal is a open/closed command, ECB is in the trip state, and a two-step remote re-trip command is issued for closing	Open remotely and then closed	ON	NC	Red
	Lock ECB for auto trip	Operate #660 key	TRIP	NO	White
Lock	Unable to manually close after locking	Unable to close successfully with a operating handle	TRIP	NO	White
	Unable to achieve remote closing after locking	Unable to close with a remote command	TRIP	NO	White
	Unable to operate the test button after locking	Unable to press the test button	TRIP	NO	White

Note: ECB opening and closing time is 15s.

TGM1P Series Moulded Case Circuit Breaker with Electric Motor Operating Machanism

4 External Picture (for reference only, with actual product prevailed)

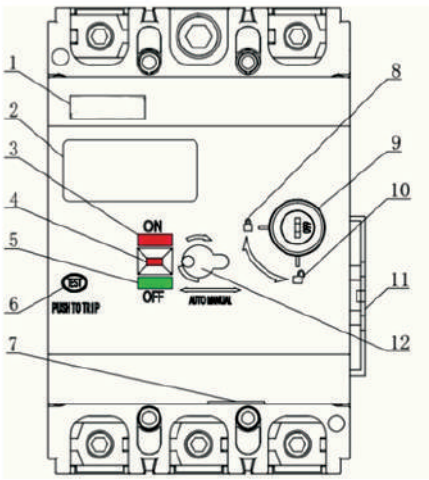

1. Logo 2. Sign parameter sticker palce 3. Closing indicator – Red

4. Opening and closing indication visual window 5. Opening indicator – Green

6. Emergency trip 7. Control power line interface Signal line ingerface 8. Disconnect lock mark

9. Lock 10. Unlock sign 11. Manual handle 12. Handle operation place

5 Outline and Installation Dimensions

5.1 Outline and installation dimensions

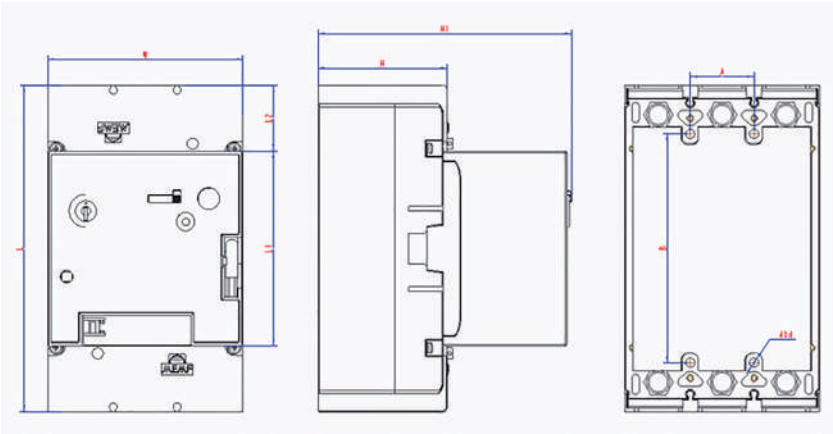

TGM1P-250

TGM1P Series Moulded Case Circuit Breaker with Electric Motor Operating Machanism

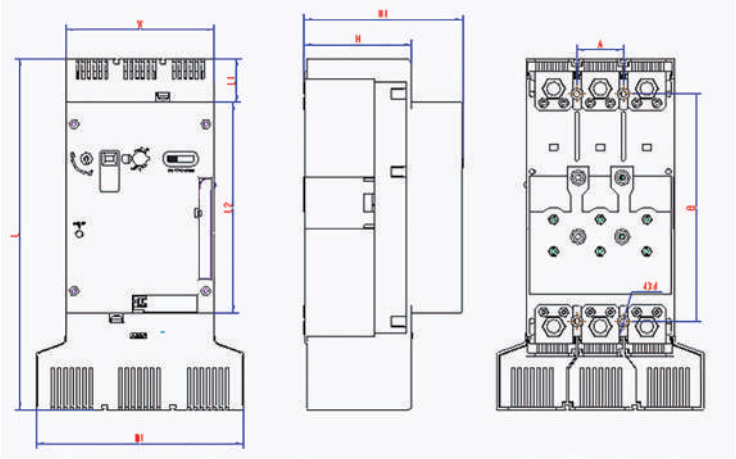

TGM1P-400

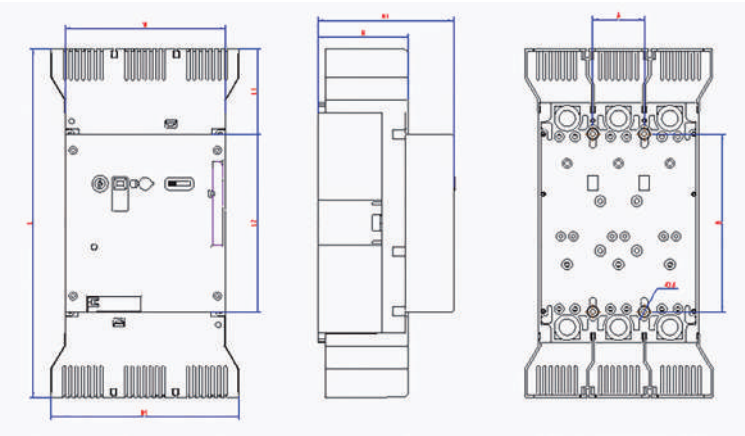

TGM1P-630

Table 4

	Code	TGM1P-250	TGM1P-400	TGM1P-630
Outline dimensions	W	107	140	181
	W1	/	196	212.1
	L	179	332.5	393
	L1	107	41.1	96.5
	L2	36	199.5	200
	H	71	101.6	101.5
	H1	139	150.3	153
Installation dimensions	A	35	44	58
	B	125.4	215	200
	D	5	6.5	6

TGM1P Series Moulded Case Circuit Breaker with Electric Motor Operating Machanism

5.2 Section area of product connecting copper wire

Table 5

Rated current	125	160	180 225	250	315 350	400	500	630
Section area of wire (mm^2)	50	70	95	120	185	240	2X150	2X185

6 Screw Tightening Torque

Table 6

Model	TGM1P-250	TGM1P-400	TGM1P-630
Nominal thread diameter (mm)	M8	M10	M12
Tightening torque (N•m)	12	22	28
Breaking torque (N•m)	18	26	33

7 Screw Tightening Torque

Table 7

Test current name	Setting current multiple	Convention time		Initial state
		In≤63A	In ＞ 63	
Conventional non-trip current	1.05 In	≥1h	≥2h	Cold state
Conventional trip current	1.30 In	＜ 1h	＜ 2h	Hot state

The instantaneous operation characteristic of the circuit breaker used for power distribution is set to 10In±20% (the reference ambient temperature is +55°C).

8 TGM1P Series Product Time/Current Characteristic Curve

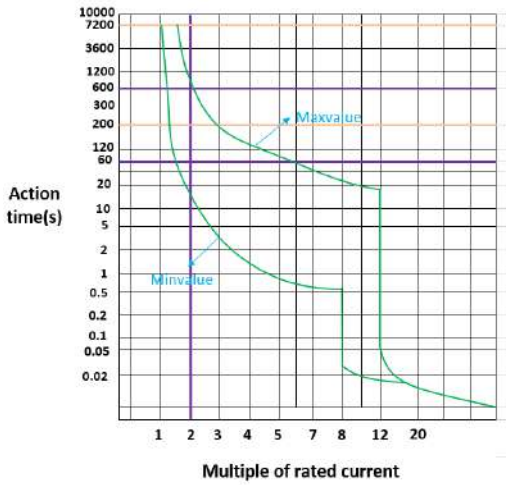

TGM1BX Series Moulded Case Circuit Breaker

1. Switch Body
2. Plug-in Type (Optional by Customer)
3. Undervoltage Release (Optional by Customer)
4. Shunt Release (Optional by Customer)
5. Alarm Contact (Optional by Customer)
6. Aux. Contact (Optional by Customer)
7. Motor Mechanism (Optional by Customer)
8. Rotary Handle Operating Mechanism(Optional by Customer)
9. Front-Panel Wiring Transition Plate(Optional by Customer)
10. Arc isolating sheet (standard)

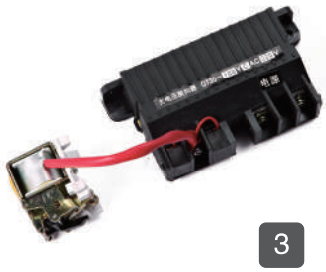

3

4

8

7

10
2
TGM1BX-125L
In 125 A
ON
OFF
1
5
6
9

TGM1BX Series Moulded Case Circuit Breaker

1 Overview

TGM1BX Series Moulded Case Circuit Breaker is one of the new circuit breakers developed by the company using international advanced design technology, and its rated limit short circuit breaking capacity (Icu) is divided into L type (standard type) and M type (medium type). The product has the characteristics of Small volume, high breaking capacity, short flashover and vibration resistance, and it is an ideal product for use in the meter box of power channels. With the rated insulation voltage of 800V, it is used in the AC 50/60Hz circuit breaker with the rated operating voltage of 690V and below for infrequent conversion of lines and infrequent start of motor. This series of circuit breaker has overload and short circuit protection devices to prevent the line and power supply equipment to prevent damage.

This series of circuit breakers can be installed perpendicularly (that is, vertical installation) or horizontally (that is, lateral installation).

The product complies with the following standards: IEC60947-1 and IEC60947-2

2 Type Designation

TG M 1 BX – □ □□/□□□□□□□□□

- Installation method code: By default: Fixed type front-panel;
  B – Fixed type back-panel
  C – Plug-in back-panel by default; plug-type type front-panel shall be indicated.
- Accessory control voltage
- Rated current: (See Table 3)
- Additional information: T: Transparent cover, F-Prepaid
- N-pole code (see Table 1); By default: Three-pole product
- Usage code: By default: Power distribution; "2": Motor protection
  International accessory code (see Table 2)
- Trip mode: 2 means electromagnetic release; 3 means complex release
- Number of poles: 2 – Two poles; 3 – Three poles; 3N – Three-pole four-wire; 4 – Four poles
- Operation mode code: By default: Direct operation via handle;
  "P": Motor operation
  "Z": Operation via rotary handle (for control cabinets)
- Breaking capability level:
  L-Standard type
  M-Medium type
- Frame rated current
- Special circuit breaker for meter box
- Design code
- Moulded case circuit breaker
- Enterprise code

Table 1

Code	Description
A type	N pole is not equipped with an overcurrent trip element, and N pole is always powered on and is not closed and open together with other three poles
B type	N pole is not equipped with an overcurrent trip element, and N pole is closed and open together with other three poles (N pole is closed first and then open)

TGM1BX Series Moulded Case Circuit Breaker

Trip mode and accessory code

Note:

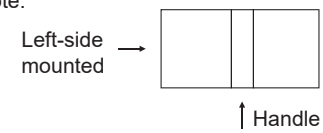

□ Alarm contact
■ Aux. contact
● Shunt release
○ Undervoltage relese
△ Prepaid shunt release

Table 2 Trip mode and accessory code

Trip mode and accessory code	Accessory name / Number of poles / Model	TGM1BX-125	TGM1BX-160	TGM1BX-250	TGM1BX-400, TGM1BX-630	
		3 poles, 4 poles	3 poles, 4 poles	3 poles, 4 poles	3 poles, 4 poles	3 poles, 4 poles
200 300	No accessory	□ | □	□ | □	□ | □	□ | □	□ | □
208 308	Alarm contact	□ | □	□ | □	□ | □	□ | □	□ | □
210 310	Shunt release	● | □	● | □	● | □	● | □	● | □
210F 310F	Prepaid shunt release	△ | □	△ | □	△ | □	△ | □	△ | □
220 320	Aux. contact	■ | □	■ | □	■ | □	■ | □	■ | □
230 330	Undervoltage release	□ | ○	□ | ○	—	□ | ○	□ | ○
240 340	Shunt release Aux. contact	● | ■	● | ■	● | ■	● | ■	● | ■
240F 340F	Prepaid shunt release Aux. contact	△ | ■	△ | ■	△ | ■	△ | ■	△ | ■
250 350	Shunt release Undervoltage release	● | ○	● | ○	—	● | ○	● | ○
260 360	Two sets of aux. contacts	■ | ■	■ | ■	■ | ■	■ | ■	■ | ■
270 370	Aux. contact Undervoltage release	■ | ○	■ | ○	—	■ | ○	■ | ○
218 318	Shunt release Alarm contact	● | □	● | □	● | □	□ | ●	□ | ●
218F 318F	Prepaid shunt release Alarm contact	△ | □	△ | □	△ | □	△ | □	△ | □
228 328	Aux. contact Alarm contact	■□ | □	■□ | □	■□ | □	■□ | □	■□ | □
238 338	Undervoltage release Alarm contact	□ | ○	□ | ○	—	□ | ○	□ | ○
248 348	Shunt release Alarm contact Aux. contact	■□ | ●	■□ | ●	● | ■□	■□ | ●	■□ | ●
248F 348F	Prepaid shunt release Aux. contact Alarm contact	■□ | △	■□ | △	△ | ■□	—	—
268 368	Two sets of aux. contacts Alarm contact	■□ | ■	■□ | ■	■□ | ■	■□ | ■	■□ | ■
278 378	Aux. contact Undervoltage release Alarm contact	■□ | ○	■□ | ○	—	■□ | ○	■□ | ○

The first digit "2" of the release mode and the internal accessory code indicates the electromagnetic (instantaneous) release, and "3" indicates the thermodynamic-electromagnetic (complex) release.

TGM1BX-125/160 shell frame has no left undervoltage, 250 shell frame has no undervoltage and right shunt, 400/630 shell frame has no right alarm, right aux. alarm and left undervoltage.

2P products are only equipped with one accessory separately.

TGM1BX Series Moulded Case Circuit Breaker

3 Technical Parameters

3.1 Technical parameters

Table 3

Basic information											
Frame rated current		125		160		250		400		630	
Number of poles		2P, 3P 3P+N, 4P		2P, 3P 3P+N, 4P		2P, 3P 3P+N, 4P		3P 3P+N, 4P			
Frequency (Hz)		50		50		50		50		50	
Rated operating voltage Ue (V)		380/400/415		380/400/415 660/690		380/400/415 660/690		380/400/415 660/690		380/400/415 660/690	
Rated insulation voltage Ui (V)		800		800		800		1000		1000	
Rated impulse withstand voltage Uimp (kV)		8		8		8		12		12	
Rated operating current In (A)		16, 20, 25, 30, 32, 40, 50, 60, 63, 65, 70, 75, 80, 90, 100, 110, 125		16, 20, 25, 30, 32, 40, 50, 60, 63, 70, 75, 80, 100, 125, 140, 150, 160		140, 150, 160, 180, 200, 225, 250		250, 280, 300, 315, 320, 350, 380, 400		400, 450, 500, 550, 600, 630	
Breaking capacity level		L	M	L	M	L	M	L	M	L	M
Rated limit short circuit breaking capacity Icu (kA)	AC400/415V	25	50	35	50	35	50	50	70	50	70
	AC660/690V	/	/	8	10	8	10	10	15	10	15
Rated run short circuit breaking capacity Ics (kA)	AC400/415V	18	35	25	35	25	35	35	50	35	50
	AC660/690V	/	/	4	8	4	8	10	10	10	10
Isolation function		Yes		Yes		Yes		Yes		Yes	
Usage category		Class A		Class A		Class A		Class A		Class A	
Service life	Mechanical	20000		20000		20000		4000		4000	
	Electrical	3000		3000		3000		1000		1000	
Flashover distance (mm)		≤50		≤50		≤50		≤100		≤100	
Accessory information											
Direct operation via handle		■ (Standard)		■ (Standard)		■ (Standard)		■ (Standard)		■ (Standard)	
Extended rotary handle		□ (Optional)		□ (Optional)		□ (Optional)		□ (Optional)		□ (Optional)	
Motor mechanism		□ (Optional)		□ (Optional)		□ (Optional)		□ (Optional)		□ (Optional)	
Shunt release		□ (Optional)		□ (Optional)		□ (Optional)		□ (Optional)		□ (Optional)	
Undervoltage release		□ (Optional)		□ (Optional)		-		□ (Optional)		□ (Optional)	
Aux. contact		□ (Optional)		□ (Optional)		□ (Optional)		□ (Optional)		□ (Optional)	
Alarm contact		□ (Optional)		□ (Optional)		□ (Optional)		□ (Optional)		□ (Optional)	
Fixed type front-panel		■ (Standard)		■ (Standard)		■ (Standard)		■ (Standard)		■ (Standard)	
Fixed type back-panel		□ (Optional)		□ (Optional)		□ (Optional)		□ (Optional)		□ (Optional)	
Plug-in type front-panel		□ (Optional)		□ (Optional)		□ (Optional)		□ (Optional)		□ (Optional)	
Plug-in type back-panel		□ (Optional)		□ (Optional)		□ (Optional)		□ (Optional)		□ (Optional)	
Transition busbar		□ (Optional)		□ (Optional)		□ (Optional)		□ (Optional)		□ (Optional)	
Phase partition		■ (Standard)		■ (Standard)		■ (Standard)		■ (Standard)		■ (Standard)	

Note: TGM1BX-160 frame M type has no rated currents 140A, 150A, and 160A.

3.2 Product trip characteristics

Table 4

Rated current of release (A)	Thermal release		Electromagnetic release operating current (A)	Remarks
	1.05 In (cold state) non-operation time (h)	1.3 In (hot state) operation time (h)		
10≤In≤63	≥1	＜1	6In±20%, 8In±20%, 10In±20%	Power distribution type
63≤In≤630	≥2	＜2		
10≤In≤630	1.0 In (cold state) non-operation time (h)	1.2 In (hot state) operation time (h)	12In±20%	Motor protection type
	≥2	＜2		

* Note: The hot state refers to the state the conventional no-trip current applying time reaches the specified appointed time; 50A and below instantaneous operation characteristics are set at 50A.

The 125/160/250 shell frame has a reference ambient temperature of +40°C, and the 400/630 shell frame has a reference ambient temperature of +30°C.

4 Operating Conditions

4.1 Ambient air temperature

4.1.1 The ambient air temperature around the TGM1BX-125/160/250 shell frame does not exceed +40°C, and the lower limit is -5°C; when the ambient air temperature exceeds +40°C or is lower than -5°C, the product tripping characteristics and temperature rise are affected by the ambient temperature, so that the manufacturer shall negotiate with the user for design or use;

4.1.2 The ambient air temperature around the TGM1BX-400/63 frame 0 does not exceed +30°C, and the lower limit is -5°C; when the ambient air temperature exceeds +30°C or is lower than -5°C, the product tripping characteristics and temperature rise are affected by the ambient temperature, so that the manufacturer shall negotiate with the user for design or use;

4.1.3 Altitude: The altitude of the installation site does not exceed 2000m.

4.1.4 The relative humidity of the atmosphere does not exceed 50% at the ambient air temperature of +40°C, and higher relative humidity is allowed at lower temperatures;

4.1.5 The monthly mean maximum relative humidity of the wettest month is 90% and the monthly mean minimum temperature of the month is +25°C, by considering the condensation occurred on the surface of the product due to temperature changes.

4.1.6 Pollution degree: 3.

4.1.7 Installation category: Class III.

4.2 Ambient temperature correction factor

4.2.1 The normal ambient temperature (-5°C ~+40°C) of the product. When the product works under the normal working environment temperature, the product performance will not be affected.

4.2.2 When the ambient air temperature exceeds 40°C or is lower than 5°C, the product tripping characteristics and temperature rise are affected by the ambient temperature, so that the manufacturer shall negotiate with the user for design or use;

4.2.3 When the ambient temperature exceeds +40°C, the correction coefficients of circuit breaker are listed in Table 5.

Table 5

Product model	40°C	45°C	50°C	55°C	60°C
TGM1BX-125	1In	0.96In	0.94In	0.93In	0.89In
TGM1BX-160	1In	0.98In	0.97In	0.95In	0.94In
TGM1BX-250	1In	0.98In	0.94In	0.9In	0.86In

Product model	30°C	35°C	40°C	45°C	50°C	55°C	60°C
TGM1BX-400	1In	0.95In	0.9In	0.89In	0.85In	0.81In	0.78In
TGM1BX-630	1In	0.95In	0.94In	0.92In	0.9In	0.87In	0.86In

TGM1BX Series Moulded Case Circuit Breaker

4.3 Correction factors used at high altitude areas

4.3.1 GB/T 14048.1 standard specifies the relationship between altitude and impulse withstand voltage. The altitude < 2000m has no significant influence on the product performance.

4.3.2 When the altitude is > 2000 m, the conditions such as air cooling and rated impulse withstand voltage drop must be considered, and the manufacturer shall contact the user for discussion of the design or use of the product.

4.3.3 Table 6 gives the correction factors of the electrical performance of circuit breaker at an altitude of > 2000m.

Table 6

Altitude (m)	2000	3000	4000	5000
Operating current correction factor	1In	0.94In	0.88In	0.85In
Insulation voltage (V)	1Ue	0.8Ue	0.7Ue	0.6Ue
Power frequency withstand voltage (V)	0.3Uimp	0.25Uimp	0.2Uimp	0.18Uimp

5 Circuit breaker characteristic curve

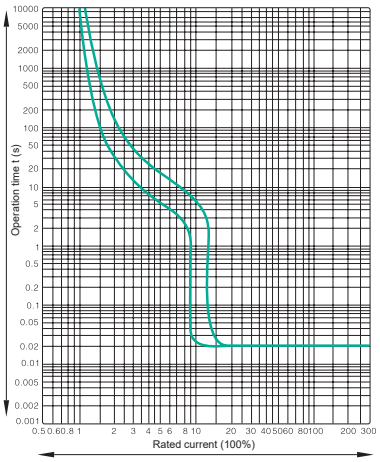

TGM1BX-125

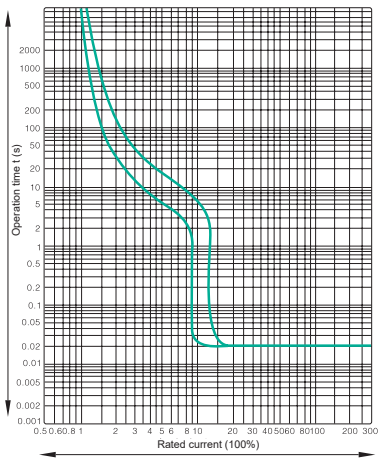

TGM1BX-160

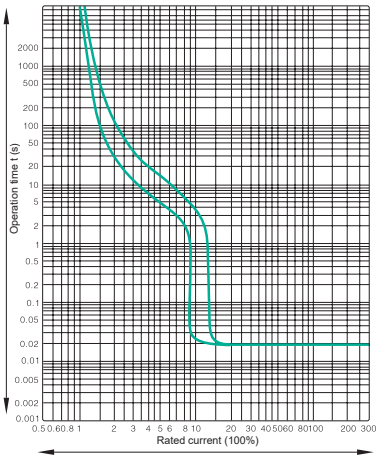

TGM1BX-250

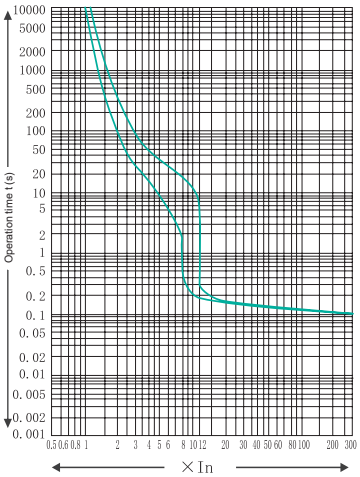

TGM1BX-400/630

TGM1BX Series Moulded Case Circuit Breaker

6 Outline and Installation Dimensions

6.1 Outline and installation dimensions of circuit breaker front-panel wiring type

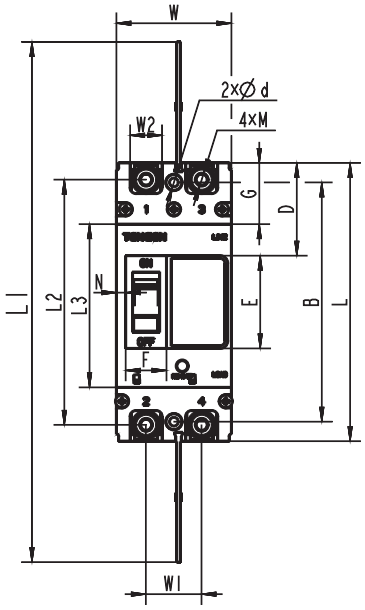

Only for 125, 160, 250

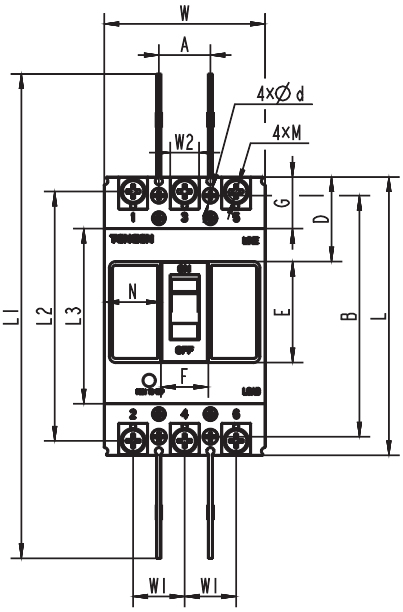

Three poles

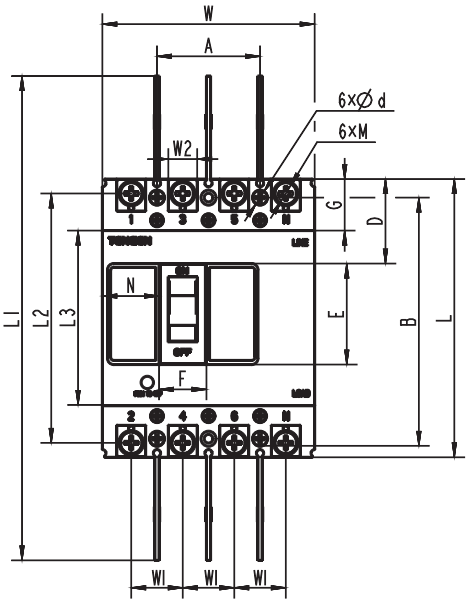

Four poles

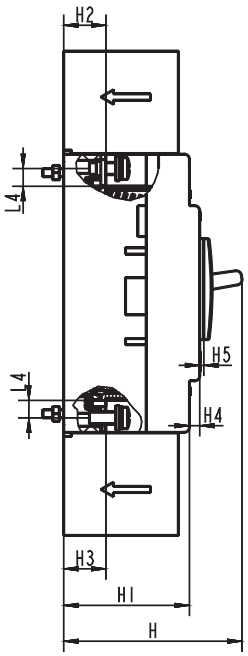

TGM1BX outline and installation diagram

TGM1BX Series Moulded Case Circuit Breaker

Table 7

	Number of poles	Outline dimensions (mm)					Panel hole size (mm)							
		W	L	L1	H	H1	N	F	G	D	E	L3	H4	H5
TGM1BX-125L	2P	53	135	235	87	61	2.5	23	25	41	49	85	5	2
TGM1BX-125M					100	74								
TGM1BX-125L	3P	78	135	235	87	61	28	23	25	41	49	85	5	2
TGM1BX-125M					100	74								
TGM1BX-125L	4P	103	135	235	87	61	28	23	25	41	49	85	5	2
TGM1BX-125M					100	74								
TGM1BX-160L	2P	65	150	280	86	61	5	22	23	50	50	88	7	2
TGM1BX-160M					105	78								
TGM1BX-160L	3P	92	150	280	86	61	35	22	23	50	50	88	7	2
TGM1BX-160M					105	78								
TGM1BX-160L	4P	122	150	280	86	61	35	22	23	50	50	88	7	2
TGM1BX-160M					105	80								
TGM1BX-250L/M	2P	78	165	300	102	67.5	12	22	31.5	51	54	101	5.5	2
	3P	107					42.5							
	4P	142												
TGM1BX-400L/M	3P	150	257	468	154	102.5	49	52	41	82.5	90	175	4	5
	4P	198												
TGM1BX-630L/M	3P	150												
	4P	198												

	Number of poles	Wiring dimensions (mm)							Installation dimensions (mm)		
		H2	H3	W1	W2	L2	L4	M	A	B	φd
TGM1BX-125L	2P	21	21	25	18	121	8	M6	/	117	5
TGM1BX-125M		28	28								
TGM1BX-125L	3P	21	21	25	18	121	8	M6	25	117	5
TGM1BX-125M		28	28								
TGM1BX-125L	4P	21	21	25	18	121	8	M6	50	117	5
TGM1BX-125M		28	28								
TGM1BX-160L	2P	24	24	30	18	132	8	M8	/	129	5
TGM1BX-160M		21	21								
TGM1BX-160L	3P	24	24	30	18	132	8	M8	30	129	5
TGM1BX-160M		21	21								
TGM1BX-160L	4P	24	24	30	18	132	8	M8	60	129	5
TGM1BX-160M		24	24								
TGM1BX-250L/M	2P	25.5	23	35	26	146.6	14	M8	/	126	5
	3P								35		
	4P								70		
TGM1BX-400L/M	3P	38.5	38	48	32	223	13.5	M10	44	194	7
	4P								94		
TGM1BX-630L/M	3P	40.5	39.5						44		
	4P								94		

The product is equipped with any of the shunt, aux. and alarm accessories, the size shall be widened by 18mm on the installation side; if the undervoltage release accessory is installed, the size shall be widened by 21mm on the installation side.

TGM1BX Series Moulded Case Circuit Breaker

6.2 Product terminal block installation dimensions

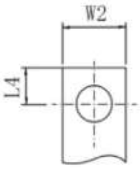

Copper busbar

Terminal block installation diagram

TGB1BX terminal block installation dimensions table (mm)

Table 8

Model		TGM1BX-125	TGM1BX-160	TGM1BX-250	TGM1BX-400	TGM1BX-630
Breaking capacity		L/M	L/M	L/M	L/M	L/M
Installation dimensions	L4	7	7	10	12	12
	W2	14	16	20	28	30

6.3 Outline and installation dimensions of circuit breaker back-panel wiring connection

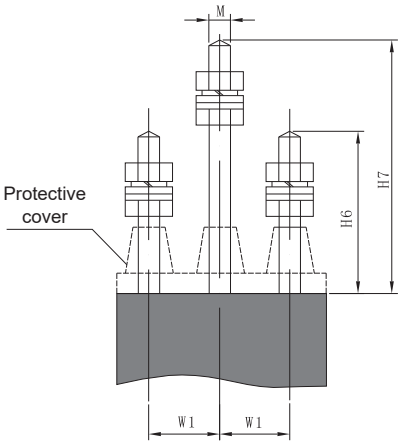

TGM1BX – 160, 250/3-pole has a protective cover

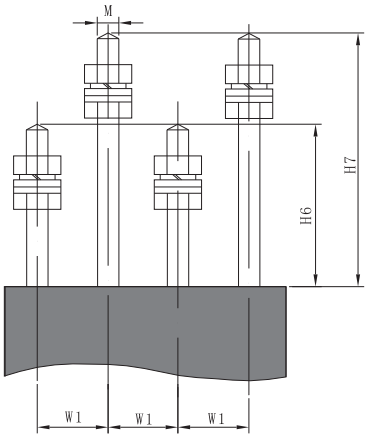

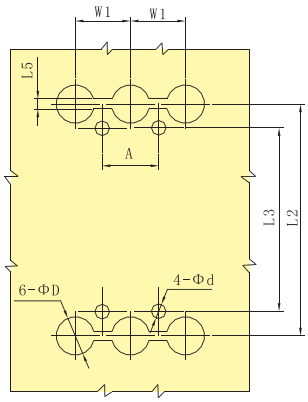

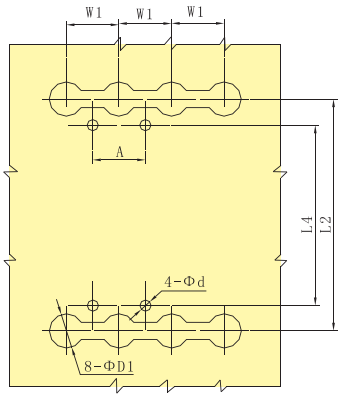

Outline and installation dimensions of back-panel wiring connection

Table 9

Product model	Outline and installation dimensions of back-panel wiring connection (mm)													
	H6	H7	H8	L2	L3	L4	L5	W1	A	D	D1	d	d1	M
TGM1BX-125	34	53	—	117	100	—	≥3	25	25	7	7	3.5	—	M6
TGM1BX-160	50	80.5	—	132	129	129	≥3	30	30	23	10	4	—	M8
TGM1BX-250	59	89	—	144	126	126	≥3	35	35	24	12	5	—	M10
TGM1BX-400/630	51	86	20.5	223	194	-	≥10	48	44	18.5	18.5	7	12.5	31

TGM1BX Series Moulded Case Circuit Breaker

6.4 Outline and installation dimensions of circuit breaker plug-in type back-panel wiring connection

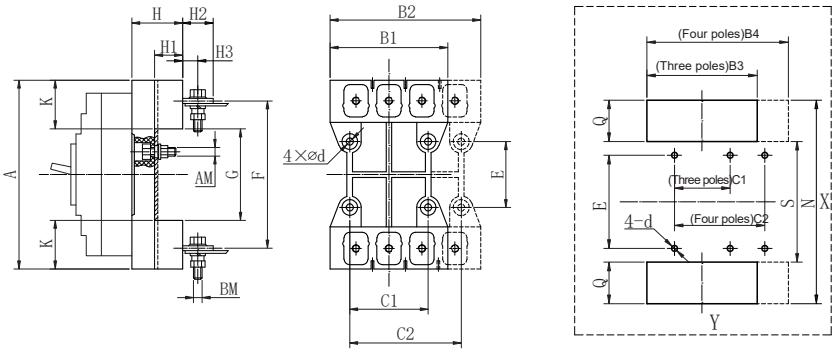

Size of hole on the mounting plate (Unit: mm)

Outline and installation dimensions of TGM1BX plug-in type back-panel wiring connection

Table 10

Available circuit breaker	Outline and installation dimensions (mm)																			
	A	B1	B2	C1	C2	E	F	G	K	H	H1	H2	H3	N	S	Q	B3	B4	AM	BM	4-d
TGM1BX-125	135	75	100	50	75	60	117	100	18	28	18	16	10	145	89	28	85	110	M5	M5	φ5.5
TGM1BX-160	169	91	125	60	90	56	132	92	38	50	33	28	19	179	83	48	101	135	M6	M8	φ6.5
TGM1BX-250	186	107	145	70	105	54	145	94	46	50	33	37	20	196	84	56	117	155	M6	M8	φ6.5
TGM1BX-400 TGM1BX-630	280	149	200	60	108	129	224	170	55	60	38	46	24	290	160	65	159	210	M8	M12	φ8.5

6.5 Outline and installation dimensions of circuit breaker plug-in type front-panel wiring connection

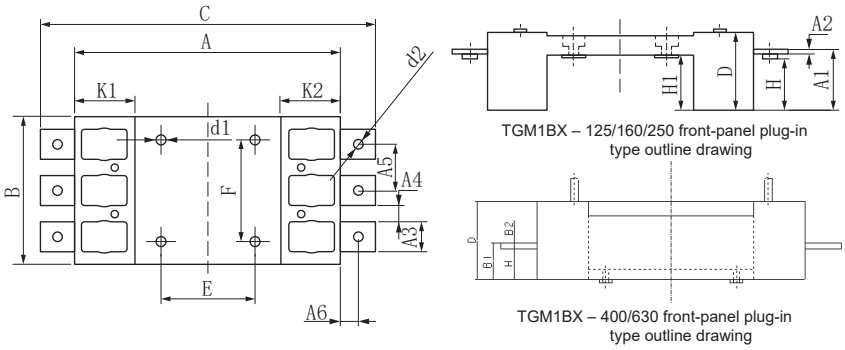

TGM1BX – 125/160/250 front-panel plug-in type outline drawing

TGM1BX – 400/630 front-panel plug-in type outline drawing

Outline and installation dimensions of TGM1BX plug-in type front-panel wiring connection

Table 11

Available circuit breaker	Outline and installation dimensions (mm)																	
	A	B	C	D	E	F	H	H1	K1	K2	d1	d2	A1	A2	A3	A4	A5	A6
TGM1BX-125	139	78	171	43	61	50	28	—	—	—	4.5	φ5.5	30	2	13	12	25	8
TGM1BX-160	172	96	217	50	60	66	13	35	38	38	7	φ8	19	3	19	10.5	31	10.5
TGM1BX-250	183	110	261	51.5	64	70	42.5	35	44	44	7	φ8	49	3	22	13.5	35	22
TGM1BX-400 TGM1BX-630	276	150	351	80	135	115	31	/(Flat)	/(Flat)	/(Flat)	φ7	φ11	37	6	25	22.5	48	22

Note: The four-pole product has no plug-in type front-panel accessory.

TGM1BX Series Moulded Case Circuit Breaker

6.6 Motor mechanism installation and electrical wiring diagram

6.6.1 TGM1BX CD2 motor mechanism

6.6.2 Electrical characteristics and wiring diagram

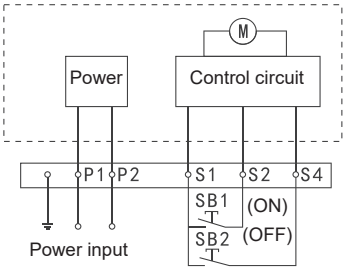

* Note:

K – The micro switch connected with the coil in series in the shunt release is a normally closed contact; when the circuit breaker opens, this contact will open automatically, and is closed when power-on.

P1 and P2 are external power input

SB1 and SB2 are operating buttons (provided by user)

6.6.3 Outline dimensions of motor mechanism

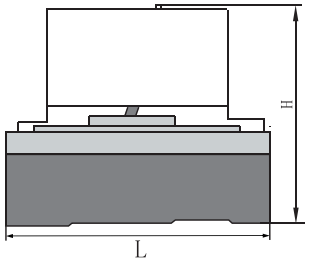

Table 12

Motor mechanism model	Dimensions (mm)	Product model					
		125L	125M	160L	160M	250	400/630
CD2	L	135		150		165	257
	H	158	171	157	173	174	255

Note: CD type motor mechanism connecting plate is an optional accessory.

TGM1BX Series Moulded Case Circuit Breaker

6.7 Rotary handle operating mechanism installation

6.7.1 Round handle outline and hole diagram

Unit: mm

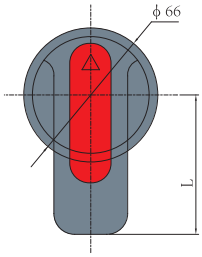

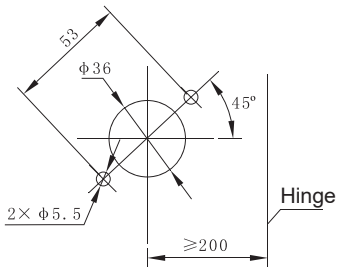

6.7.2 Square handle outline and hole diagram

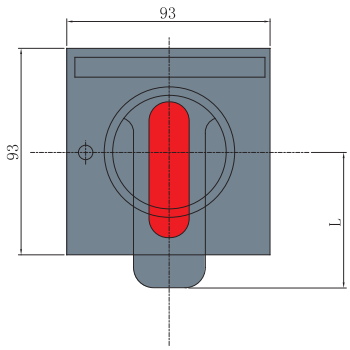

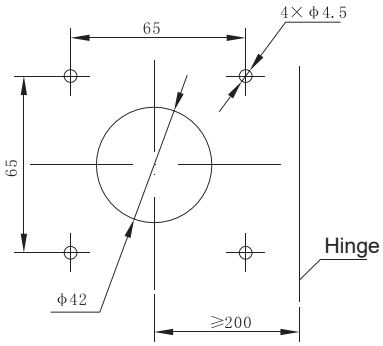

Rotary handle operating mechanism installation diagram

6.7.3 Center-based rotary handle operating mechanism outline and installation diagram

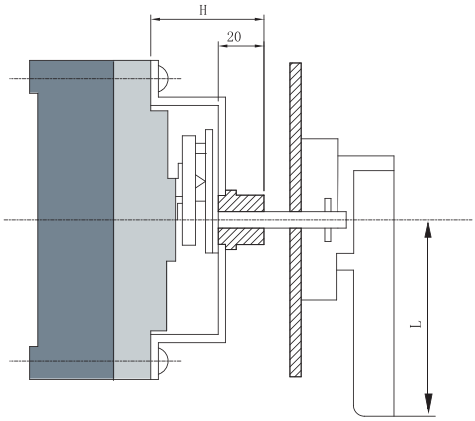

Outline dimensions of rotary handle operating mechanism

Table 13

Circuit breaker model	H(mm)	L(mm)
TGM1BX-125	51	65
TGM1BX-160	52	65
TGM1BX-250	57	95
TGM1BX-400/630	97	125

Handle rod length: 150 mm (by default) / 200 mm/250 mm/300 mm/350 mm/400 mm/450 mm/500 mm.

TGM1BX Series Moulded Case Circuit Breaker

7 Internal Accessories

7.1 Undervoltage release

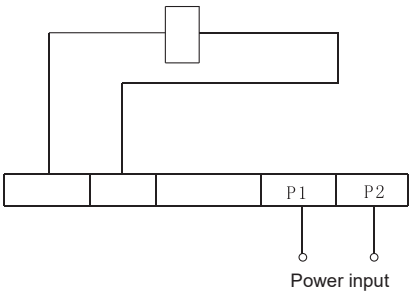

Rated operating voltage Ue: AC220V/230V, AC380V/400V

When the voltage drops (or even slowly drops) to the range of 70% -35% of the rated voltage, the undervoltage release should work; When the power voltage of the undervoltage release is below than 35% of the release voltage, the undervoltage release shall prevent the circuit breaker from closing; when the power voltage is equal to or greater than 85%, the circuit breaker shall be closed.

Special reminder: The circuit breakers equipped with under-voltage releases can be closed and open normally only when the under-voltage releases is applied with rated voltage, otherwise the circuit breaker will be damaged.

7.2 Shunt release

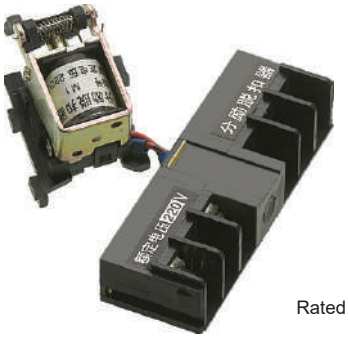

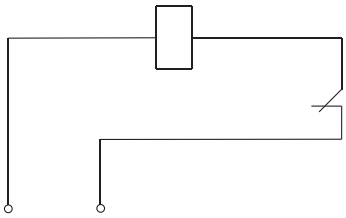

Rated control power voltage Us: AC220V/230V,
AC380V/400V, DC24V, DC110V

The circuit breaker can be open under the 70% - 110% rated voltage.

Note: When the voltage is DC24V, the rated current of the control circuit must reach 5A.

7.3 Aux. contact

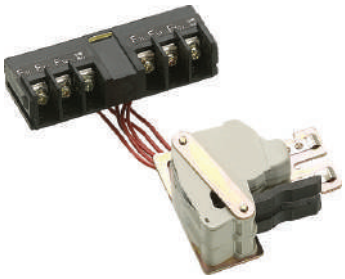

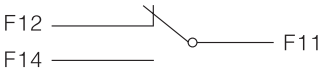

State when the circuit breaker in the “Free Trip” and “OFF” position

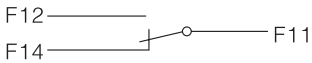

State when the circuit breaker in the “ON” position

Table 14

Product model	TGM1BX-125		TGM1BX-160		TGM1BX-250		TGM1BX-400 TGM1BX-630	
Conventional thermal current Ith	3A		3A		3A		6A	
Usage category	AC-15	DC-13	AC-15	DC-13	AC-15	DC-13	AC-15	DC-13
Rated operating current	0.4A	0.15A	0.3A	0.15A	0.4A	0.15A	1A	0.15A

TGM1BX Series Moulded Case Circuit Breaker

7.4 Alarm contact

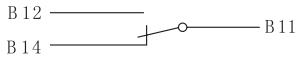

State when the circuit breaker in the Free Trip (Alarm) position

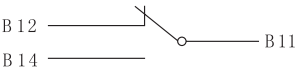

State when the circuit breaker in the “OFF” and “ON” position

When the circuit breaker is closed and open normally, the alarm contact will not work. Only when an alarm is issued for trip (or fault trip), the contact will change its original position; that is, the normally open becomes normally closed, and the normally closed becomes normally open. When the circuit breaker re-trips, the alarm contact will restore its original state.

8 Standard Sectional Area of Copper Wire Used in Connection

Table 15

Rated current (A)	>10 ≤20	>20 ≤25	>25 ≤32	>32 ≤50	>50 ≤65	>65 ≤85	>85 ≤115	>115 ≤150	>150 ≤175	>175 ≤225	>225 ≤250	>250 ≤275	>275 ≤350	>350 ≤400
Sectional area of wire (mm^2)	2.5	4	6	10	16	25	35	50	70	95	120	150	185	240

Rated current (A)	Cable		Copper busbar	
	Qty.	Sectional area (mm^2)	Qty.	Sectional area (mm^2)
>400 ≤500	2	150	2	30×5
>500 ≤630	2	185	2	40×5

9 Ordering Notice

Please specify the following items when ordering:

a. Model, name, and number of poles of circuit breaker.

b. Rated current of circuit breaker.

c. Accessory name, specification, and combination code of circuit breaker; when the undervoltage release and shunt release are used, the operating voltage (or control power voltage) shall be indicated.

d. Purpose: For power distribution (power distribution delivery if not indicated) and motor protection (indicated by 2).

e. Wiring connection: Front-panel wiring (front-panel wiring delivery if not indicated), back-panel wiring, and plug-in type.

f. Qty.

For example:

TGM1BX – 125, standard type L, three poles, release current (rated current) 100A, with shunt release, voltage AC 380V, alarm contact, for power distribution, front-panel wiring, 20 units; please specify: TGM1BX – 125 L/3318, 100A, AC380V, 20 units.

TGM1BX Series Moulded Case Circuit Breaker

10 TGM1BX Series Moulded Case Circuit Breaker Rapid Model Selection

TGM1BX	–	125	L	Z	/	4	3	10	2	A	T	63A	AC230V	B
Product model		Frame rated current code	Breaking capacity	Operation method		Number of poles	Trip mode	Internal accessory	Purpose	N pole code	Additional informa-tion	Rated current	Accessory voltage	Installa-tion method
TGB1BX moulded case circuit breaker		125:125A 160:250A 250:250A	L: Standard type M: Medium type	Default: Direct operation		2: 2 poles	2: Short circuit protection	00: No accessory 10: Shunt release 10F: Prepaid release 20: Aux. contact	Default: Power distribution protection	A: Three protective poles and zero line are open not together with other poles	T: Transparent cover	10A-63A …… 630A	AC380/400V AC220/230V DC24V	Default: Fixed type front-panel
		400:400A 630:630A		Z: Operation via rotary handle		3: 3 poles	3: Overload + Short circuit	30: Undervolage release 40: Shunt + Aux. 40F: Prepaid release + Aux. 50: Shunt + Undervoltage	2: Motor protection	B: Three protective poles and zero line are open together with other poles			Multiple accessory voltages are described seperately if any (such as: shunt AC230V and undervoltage AC400V)	B: Fixed type back-panel
				P: Motor operation		3N : 3P+N		60: Two sets of aux. contacts 70: Undervoltage + Aux. 08: Alarm contact 18: Shunt + Alarm		C: Four protective poles and zero line are open together with other poles				C: The plug-in type back-panel is available by default, the plug-in type front-panel shall be indicated.
						4: 4 poles		28: Aux. + Alarm 38: Undervoltage + Alarm 48: Shunt + Alarm + Aux.		D: Four protective poles and zero line are open not together with other poles				
								68: Two sets of aux. + alarm 78: Undervoltage + Aux. + Alarm						

Note: 2-pole product has no plug-in type.

TGM3 Series Moulded Case Circuit Breaker

1 Body
2 Flame arresting chamber (optional to customers)
3 Plug-in connection (optional to customers)
4 Flash barrier (standard)
5 Zero flashover cover (optional to customers)
6 Undervoltage release (optional to customers)
7 Shunt release (optional to customers)
8 Alarm contact (optional to customers)
9 Auxiliary contact (optional to customers)
10 Front-panel wiring transition plate (optional to customers)
11 Electric motor operating mechanism (optional to customers)
12 Rotary handle operating mechanism (optional to customers)

5

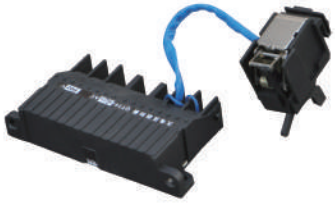
6

7

12

11

4
3
TENGEN
TGM3-250
ON
250A
1
2
8
9
10

TGM3 Series Moulded Case Circuit Breaker

1 Overview

TGM3 series moulded case circuit breaker is one of the new circuit breakers researched and developed by us with international advanced technology. It has the characteristics of zero flashover, high breaking, box-type accessories, small and compact structure, green and environmental protection.

By rated limit short-circuit breaking capacity (Icu), the circuit breaker is divided into L type (standard), M type (relatively high breaking) and H (high breaking). It is an ideal product for power distribution and motor protection. It has the rated isolation voltage of 800V. It can be used for occasional circuit switch and startup of motor in circuits with the rated working voltage ≤690V and rated current of 16A-800A.

This series of circuit breakers are equipped with overload, short circuit and undervoltage protection devices, which can protect circuits and power devices from overcurrent or undervoltage damage. This series circuit breaker may be installed vertically (i.e., vertical installation) or horizontally (i.e., horizontal installation).

It has disconnecting function, with the corresponding symbol of:

The circuit breaker shall meet the standard: IEC 60947-1 and IEC 60947-2

2 Type Designation

TG M 3 – □ □□/□□□□□□□□□□□□□

- Special requirements
- Code of application scenarios: No code generally
- Usage code (no code- with flashover distance; W- zero flashover)
- Installation mode code: Fixed, front-panel connection, no code; B- fixed, rear-panel connection; C- plug-in type
- Voltage of accessories
- Rated current
- Alarm module: III- overload alarm without tripping; No code – no this accessory
- Additional information: F-prepaid
- Code of 4-pole product (see Table 1); no code for 3-pole product
- Usage code: no code: for power distribution, 2: Motor protection
- Tripper type and accessory code (see Table 2)
- Number of poles: 3: 3P 3N : three-pole and four-line; 4 : 4P
- Code of operation mode: No code: Direct operation with handle; P: Motor operation; Z: Rotating handle operation (for switch cabinet)
- Breaking capacity level: L type-low breaking(standard), M type– medium breaking, H type – high breaking
- Frame current
- Design code
- Moulded case circuit breaker
- Enterprise code

Table 1

Code	Statement	Example
Type A	N pole is not equipped with over-current tripping element, has been connected with all along, and does not act with other three poles	3N300A
Type B	N pole is not equipped with over-current tripping element, and acts with other three poles (N-pole turn on prior to turn off)	4300B
Type C	N pole is equipped with over-current tripping element, and acts with other three poles (N-pole turn on prior to turn off)	4300C
Type D	N pole is equipped with over-current tripping element, has been connected with all along, and does not act with other three poles	3N300D

Note: No code is available for 3-pole product; 3N corresponds to A type and D type, and 4P corresponds to B type and C type. No C type and D type are available for 63 frame

TGM3 Series Moulded Case Circuit Breaker

View of codes of 4-pole product

Without overcurrent release

Type A: N pole is not equipped with over-current tripping element, has been connected with all along, and does not act with other three poles.

Without overcurrent release

Type B: N pole is not equipped with over-current tripping element, and acts with other three poles (N-pole turn on prior to turn off).

With overcurrent release

Type C: N pole is equipped with over-current tripping element, and acts with other three poles (N-pole turn on prior to turn off).

With overcurrent release

Type D: N pole is equipped with over-current tripping element, has been connected with all along, and does not act with other three poles.

Code of release and accessories

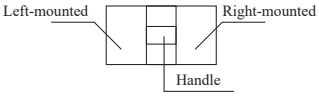

Alarm contact ●　　Auxiliary contact ○

Shunt release ■　　Undervoltage release ▲

Table 2

	Accessory Code		Accessory installation and lead mode					
Accessory Name			TGM3-63 TGM3-125		TGM3-250		TGM3-400 TGM3-630 TGM3-800	
No accessories	200	300						
Alarm contact	208	308						
Shunt release	210	310						
Auxiliary contact	220	320						
Undervoltage release	230	330						
Shunt tripper Auxiliary contact	240	340						
Shunt release Undervoltage release	250	350						
Two groups of auxiliary contacts	260	360						
Auxiliary contact Undervoltage release	270	370						
Shunt release Alarm contact	218	318						
Auxiliary contact Alarm contact	228	328						
Undervoltage release Alarm contact	238	338						
Shunt release Auxiliary contact Alarm contact	248	348						
Two groups of auxiliary contacts Alarm contact	268	368						
Undervoltage release Auxiliary contact Alarm contact	278	378						

(1) No right alarm and aux. alarm are available for four-pole product with 400 and above frame.

TGM3 Series Moulded Case Circuit Breaker

3 Technical Parameters

3.1 Product parameters (Table 3

Table 3

Technical Specification									
Frame current		63		125			250		
Number of poles		3P、3P+N、4P		3P、3P+N、4P			3P、3P+N、4P		
Frequency (Hz)		50		50			50		
Rated working voltage Ue (V)		3800/400/415		400/550/690			400/550/690		
Rated insulation voltage Ui (V)		800		800			800		
Rated impulse withstand voltage Uimp (kV)		8		8			8		
Rated working current In(A)		10、15A、16A、20A、25A、30A 32A、40A、50A、63A		16A、20A、25A、32A、40A、50A、63A、80A、100A、125A			100A、125A、140A、160A、180A、200A、225A、250A		
Breaking capacity		L	M	L	M	H	L	M	H
Breaking capacity of rated limiting short circuit Icu(kA)	AC400V	25	35	35	50	65	35	50	65
	AC550V	/	/	/	25	25	/	25	25
	AC690V	/	/	5	10	15	5	10	15
Breaking capacity of rated operating short circuit Ics(kA)	AC400V	18	25	26	50	50	26	50	50
	AC550V	/	/	/	20	20	/	20	20
	AC690V	/	/	5	5	10	5	5	10
Isolating function		3P, 4P		3P, 4P			3P, 4P		
Usage category		Category A		Category A			Category A		
Flashover distance (mm)	Have flashover distance	≤50		≤50			≤50		
	Zero flashover	0		0			0		
Mechanical life (times)	Without maintenancein	20,000		20,000			20,000		
	With With maintenance	40,000		40,000			40,000		
Electrical life (times)		10,000		10,000			10,000		
Accessories information									
Direct operation with handle		■ (Standard)		■ (Standard)			■ (Standard)		
Extended rotating handle		□ (Optional)		□ (Optional)			□ (Optional)		
Motor-operated mechanism		□ (Optional)		□ (Optional)			□ (Optional)		
Shunt release		□ (Optional)		□ (Optional)			□ (Optional)		
Undervoltage release		□ (Optional)		□ (Optional)			□ (Optional)		
Auxiliary contact		□ (Optional)		□ (Optional)			□ (Optional)		
Alarm contact		□ (Optional)		□ (Optional)			□ (Optional)		
Fixed, front panel connection		■ (Standard)		■ (Standard)			■ (Standard)		
Fixed, rear panel connection		□ (Optional)		□ (Optional)			□ (Optional)		
Plug-in, front panel connection (not optional to 4P products)		□ (Optional)		□ (Optional)			□ (Optional)		
Plug-in rear panel connection		□ (Optional)		□ (Optional)			□ (Optional)		
Transition bar		□ (Optional)		□ (Optional)			□ (Optional)		
Phase partition		■ (Standard)		■ (Standard)			■ (Standard)		
Handle lock		□ (Optional)		□ (Optional)			□ (Optional)		
Zero flashover cover		□ (Optional)		□ (Optional)			□ (Optional)		

Note: Select zero flashover accessories to achieve zero flashover.

TGM3 Series Moulded Case Circuit Breaker

Table 3, continue

Technical Specification										
Frame current		400			630			800		
Number of poles		3P、3P+N、4P			3P、3P+N、4P			3P、3P+N、4P		
Frequency (Hz)		50			50			50		
Rated working voltage Ue (V)		400/550/690			400/550/690			400/550/690		
Rated insulation voltage Ui (V)		1000			1000			1000		
Rated impulse withstand voltage Uimp (kV)		12			12			12		
Rated working current In(A)		225A、250A、315A、350A、400A			400A、500A、600A、630A			400A、500A、600A、630A、700A、800A		
Breaking capacity		L	M	H	L	M	H	L	M	H
Breaking capacity of rated limiting short circuit Icu(kA)	AC400V	50	65	85	50	65	85	50	65	85
	AC550V	/	35	35	/	35	35	/	35	35
	AC690V	15	20	30	15	20	30	15	20	30
Breaking capacity of rated operating short circuit Ics(kA)	AC400V	35	65	65	35	65	65	35	65	65
	AC550V	/	25	25	/	25	25	/	25	25
	AC690V	10	20	20	10	20	20	10	20	20
Isolating function		3P, 4P			3P, 4P			3P, 4P		
Usage category		Category A			Category A			Category A		
Flashover distance (mm)	Have flashover distance	≤100			≤100			≤100		
	Zero flashover	0			0			0		
Mechanical life (times)	Without maintenancein	10,000			10,000			8,000		
	With With maintenance	20,000			20,000			10,000		
Electrical life (times)		8,000			8,000			7,500		
Accessories information										
Direct operation with handle		■ (Standard)			■ (Standard)			■ (Standard)		
Extended rotating handle		□ (Optional)			□ (Optional)			□ (Optional)		
Motor-operated mechanism		□ (Optional)			□ (Optional)			□ (Optional)		
Shunt release		□ (Optional)			□ (Optional)			□ (Optional)		
Undervoltage release		□ (Optional)			□ (Optional)			□ (Optional)		
Auxiliary contact		□ (Optional)			□ (Optional)			□ (Optional)		
Alarm contact		□ (Optional)			□ (Optional)			□ (Optional)		
Fixed, front panel connection		■ (Standard)			■ (Standard)			■ (Standard)		
Fixed, rear panel connection		□ (Optional)			□ (Optional)			□ (Optional)		
Plug-in, front panel connection (not optional to 4P products)		□ (Optional)			□ (Optional)			□ (Optional)		
Plug-in rear panel connection		□ (Optional)			□ (Optional)			□ (Optional)		
Transition bar		□ (Optional)			□ (Optional)			□ (Optional)		
Phase partition		■ (Standard)			■ (Standard)			■ (Standard)		
Handle lock		□ (Optional)			□ (Optional)			□ (Optional)		
Zero flashover cover		□ (Optional)			□ (Optional)			□ (Optional)		

Note: Select zero flashover accessories to achieve zero flashover.

3.2 Inverse-time characteristic of circuit breakers for power distribution (Table 4)

Table 4

Name of test current	Rated current multiple	Conventional time		Initial state
		In≤63A	In>63A	
Conventional non-tripping current	1.05 In	≥1h	≥2h	Cold state
Conventional tripping current	1. 30 In	<1h	<2h	Thermal state

Note: Thermal state refers to the state after the conventional non-tripping current reaches the specified time.

TGM3 Series Moulded Case Circuit Breaker

3.3 Inverse-time characteristic of circuit breakers for motor protection (Table 5)

Table 5

Name of test current	Rated current multiple	Conventional time	Initial state
Conventional non-tripping current	1.0 In	≥2h	Cold state
Conventional tripping current	1.2 In	<2h	Thermal state

Note: Thermal state refers to the state after the conventional non-tripping current reaches the specified time.

3.4 Short-circuit protection characteristics of the circuit breaker

The setting value of instantaneous action characteristic of circuit breakers for distribution is 10In ± 20%. The setting value of instantaneous action characteristic of circuit breakers for motor protection is 12In ± 20%.

4 Operating Conditions

4.1 Temperature
4.1.1 The ambient air temperature shall be not higher than +40ºC but shall not lower than -5ºC, and the average temperature within 24 hours shall be not higher than +35ºC.
4.3.2 In special environment: The temperature shall not be <-25ºC and >+55ºC.
4.3.3 Derate according to the attitude factors or contact us when the temperature is >+40ºC and <-5ºC.
4.2 Altitude
4.2.1 The attitude for normal operation shall not exceed 2,000 meters.
4.2.2 Derate according to the attitude factors or contact us when the attitude is above 2,000 meters.
4.3 Humidity
4.3.1 The relative humidity of atmosphere shall be not more than 50% at the ambient air temperature of +40ºC. A higher relative humidity is allowed at the lower temperature.
4.3.2 The monthly average maximum relative humidity of the wettest month shall not exceed 90%, and the monthly average minimum temperature shall not exceed +25°C.
4.3.3 Please consider the effect of condensation on product surface due to temperature changes on product performance.
4.4 Pollution degree: 3.
4.5 Installation class: III.
4.6 Installation conditions: The inclination with the vertical plane does not exceed 5° when installation of the circuit breaker.

5 The Protection Characteristic Curve of the Circuit Breaker

TGM3-63/125(L/M/H) Time/current characteristic curve

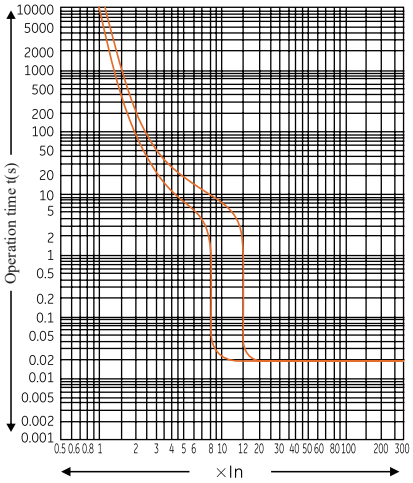

TGM3 Series Moulded Case Circuit Breaker

TGM3-250 (L/M/H) Time/current characteristic curve

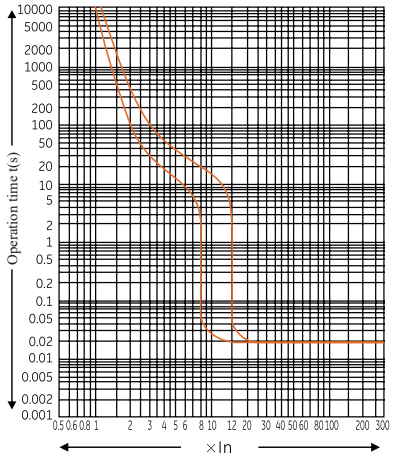

TGM3-400 (L/M/H) Time/Current Characteristic Curve

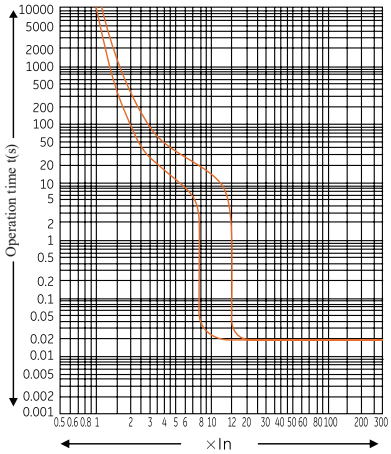

TGM3-630(L/M/H) Time/current characteristic curve

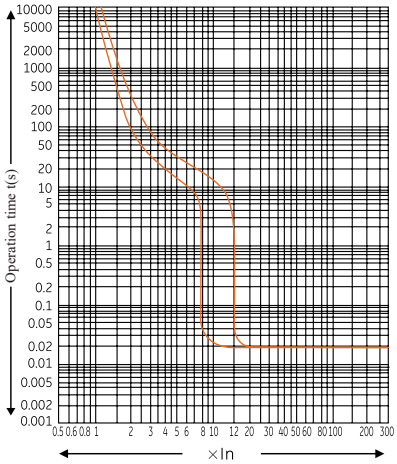

TGM3-800(L/M/H) Time/Current Characteristic Curve

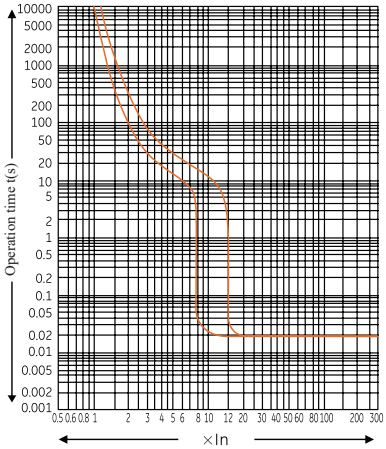

TGM3 Series Moulded Case Circuit Breaker

6 Correction Factors of the Circuit Breaker in Special Environment

6.1 Derating factors of temperature change(Table 6)

Table 6

Ambient temperature / Factors / Model	+40 C	+45 C	+50 C	+55 C	+60 C
	Derating factors	Derating factors	Derating factors	Derating factors	Derating factors
TGM3-63	1In	0. 95 In	0. 89In	0.84In	0. 76In
TGM3-125	1In	0. 95 In	0. 89In	0.84In	0. 76In
TGM3-250	1In	0. 95 In	0. 90In	0. 87In	0. 82In
TGM3-400	1In	0. 94In	0. 87In	0.81In	0. 73In
TGM3-630	1In	0. 93In	0. 88In	0. 83In	0. 76In
TGM3-800	1In	0. 92In	0. 86In	0. 81In	0. 75In

6.2 Effect of altitude change on the circuit breaker characteristics (Table 7)
When the altitude exceeds 2,000 meters, electrical performance of the circuit breaker can be modified according to the following table.

Table 7

Altitude	2,000 meters	3,000 meters	4,000 meters	5,000 meters
Power frequency withstand voltage	3000V	2500V	2000V	1800V
Working current correction factor	1	0. 94	0. 88	0. 83

7 Accessories

Product internal accessories
According to the needs of users, the circuit breaker accessories can be directly led out with wire (wire length of 50cm. For special requirements, please specify when ordering), or be equipped with terminal blocks (if needed, please specify when ordering).
Shunt Release (left-mounted and right-mounted)

Rated control power supply voltage (Us)	AC: AC220/230V, AC380/400V DC: DC24V, DC110V, DC220V
Action voltage	(0. 7~1. 1)Us
Wiring Diagram: 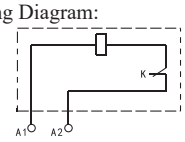 Power supply input	Note: K-The microswitch in the shunt release which is in series with the coil inside is normally closed contact; after opening of circuit breaker, the contact is automatically opened; at the closing, it is closed.

When the rated control power supply voltage is DC24V, the shunt release can be used directly. The maximum length is 150m for 1.5mm^2 copper lead (the length of each of the two leads) and 250m for 2.5mm^2 copper lead. The power at the terminal of the release shall meet the minimum power of 50W, or a DC24V intermediate relay shall be used for controlling AC230V or AC400V shunt release, and the contact capacity of the intermediate relay shall be no less than 1A.

- Prepaid meter shunt release

1. Difference between prepaid shunt release and ordinary shunt release: After the ordinary shunt release is powered on, the iron core pulls in and drives the product to act. The prepaid shut tripper has the following two states:
   1) When Phase A and Phase N are powered on, the iron core pulls in with a delay of 0.5s-5s and drives the product to act.
   2) When the signal port IN is connected to Phase A, the iron core doesn't pull in and the product doesn't act.

2. Sampling power supply voltage of prepaid shunt tripper body: AC220V (only for 63 frame: AC220V/380V) .

TGM3 Series Moulded Case Circuit Breaker

Wiring diagram of prepaid installation

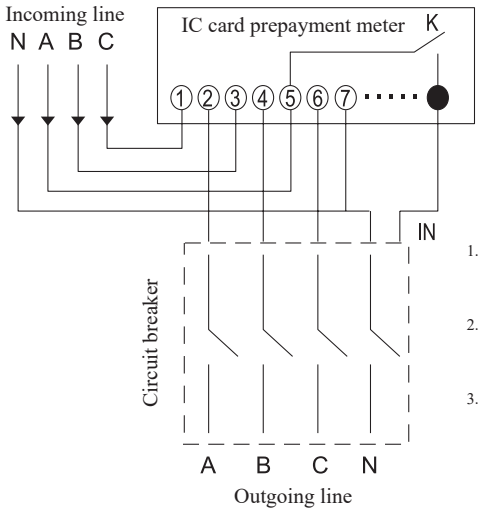

1. When Phase A and Phase N are powered on, the iron core pulls in and drives the product to act.
2. When the signal port IN is connected to Phase A, the iron core doesn't pull in and the product doesn't act.
3. Sampling power supply voltage of prepaid shunt tripper body: AC220V.

- Undervoltage release (left-mounted and right-mounted)

	Rated working voltage (Ue)	AC: AC220/230V, AC380/400V
	Action feature	When the voltage is 35%-70% of the rated working voltage, it shall trip reliably, When the voltage is 85%-110% of the rated working voltage, it shall guarantee closing; When the voltage is lower than 35% of the rated working voltage, it shall prevent closing.
	Wiring Diagram: 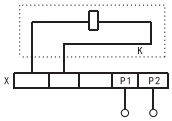 Power supply input	Note: X- terminal block. Note: (The circuit breaker internal accessory wiring diagram is in the dotted box.)

Attention: The undervoltage release must be energized first in order to re-buckle and close the circuit breaker, otherwise it will damage the circuit breaker.

- Auxiliary contact (left-mounted and right-mounted)

Fram rated current	63A<Inm≤250A		Inm≥400A	
Conventional heating current Ith	3A		6A	
Usage category	AC-15	DC-13	AC-15	DC-13
Working voltage	AC380V/400V	DC220V/230V	AC380V/400V	DC220V/230V
Rated working current	0.3A	0.15A	1A	0.15A

Wiring diagram

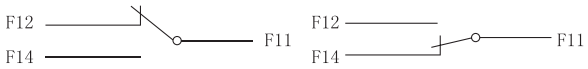

Status of the circuit breaker at "Opening" position

Status of the circuit breaker at "Closing" position.

TGM3 Series Moulded Case Circuit Breaker

- Manually operated mechanism:
  The outline and installation dimension of the rotating handle are shown in following figures and table:

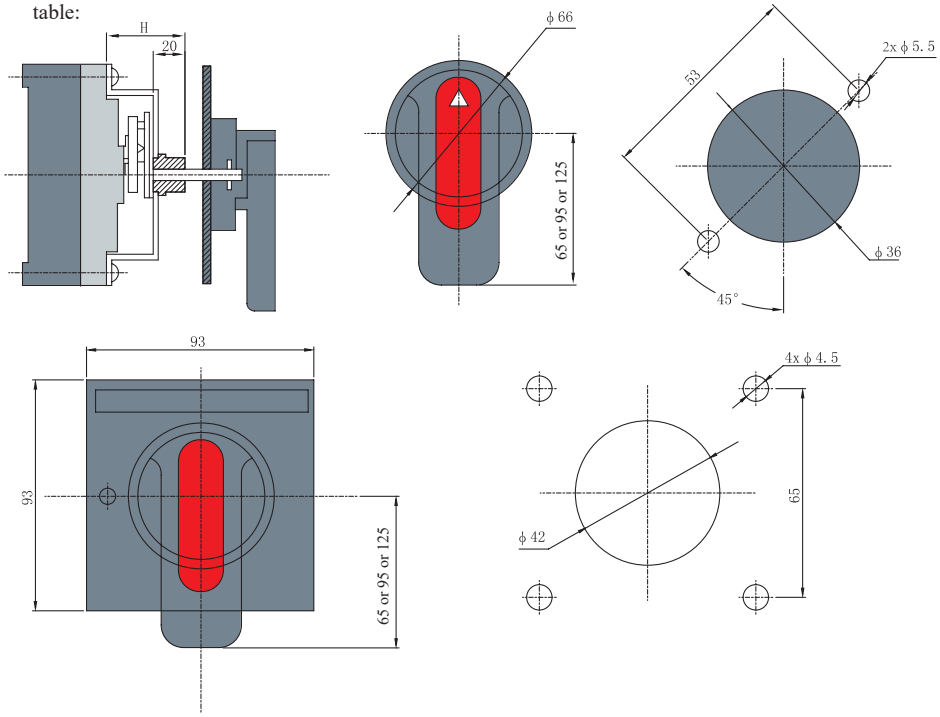

Outline and hole dimensions of the rotating handle

Model and specification	TGM3-63	TGM3-125	TGM3-250	TGM3-400	TGM3-630/800
Installation dimension (H)	54	61	57	87	92

- Alarm contact (left-mounted and right-mounted)

Conventional heating current Ith	3A
Rated working current Ie	Same as auxiliary contact

Wiring Diagram:

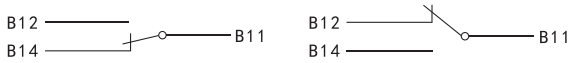

The circuit breaker is at free release (alarm) status.

Status of the circuit breaker at "Opening" and "Closing" position.

TGM3 Series Moulded Case Circuit Breaker

● Accessory for overload alarm without tripping (left lead out wire of the product)

The accessory for overload alarm without tripping is a built-in accessory. It is used to output passive alarm signal without tripping when the circuit breaker is overloaded and the tripping time is reached; It is installed through the left lead out wire of the product.	Conventional heating current Ith	3A
	Rated working current Ie	Same as auxiliary contact
	Wiring Diagram:	

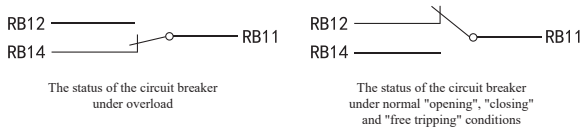

The status of the circuit breaker under overload

The status of the circuit breaker under normal "opening", "closing" and "free tripping" conditions

Product external accessories

● Electric Motor operating mechanism:

It is mounted on the panel of the circuit breaker, and is used for the remote closing, disconnecting and re-closing of the circuit breaker electrically. It is suitable for automatic control. See Table 8 for the outline dimension of the motor-operated mechanism

Input voltage	AC220V/230V, AC380V/400V
Wiring diagram	

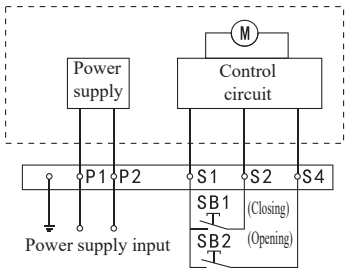

Note: P1 and P2 are inputs of external power supplies. SB1 and SB2 are operation buttons (prepared by users)

Note: The wiring diagram of internal accessories of motor-operated mechanism is in the bashed box.

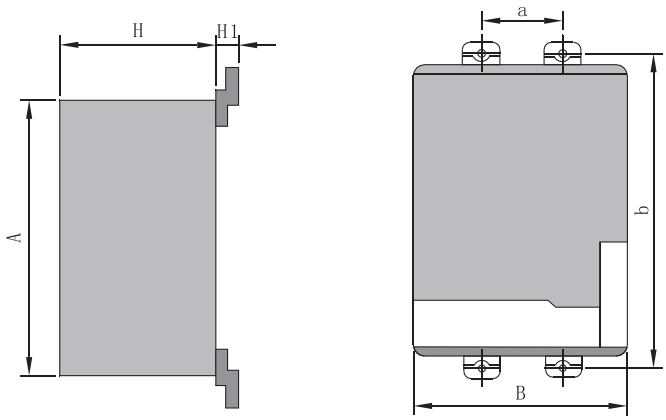

Table 8

Model	A	B	H	H1	a	b
TGM3-63	101	73	78	13	25	117
TGM3-125	116	90	77	22	30	129
TGM3-250	116	90	77	17	35	126
TGM3-400	176	130	115	24	44	194
TGM3-630/800	176	130	115	27	70	243

TGM3 Series Moulded Case Circuit Breaker

8 Outline and Installation Dimensions

8.1 Outline dimension and installation dimension (Table 9, Figure 1 and Figure 2)

Table 9

Model	Number of poles	Outline dimension (mm)												
		L	L1		L2	L4	L5	W	W1	W2	H	H1	H2	H3
			Non-zero flashover	Zero flashover										
TGM3-63L	3	/	235	/	121	7.5	/	78	25	18	87	62	20.5	2.5
	4							103						
TGM3-63M	3							78						
	4							103						
TGM3-125L	3	151.6	253	268	132	8	164	93	30	18	99	64	25	3
	4							122						
TGM3-125M	3							93			116	82	28	
	4							122						
TGM3-125H	3							93						
	4							122						
TGM3-250L	3	165	300	315	146	12	180	107	35	24	98	69	25	4
	4							142						
TGM3-250M	3							107			116	85	23	
	4							142						
TGM3-250H	3							107						
	4							142						
TGM3-400L	3	257	465	493	224	13	285	150	48	33	150	99	39	5
	4							198						
TGM3-400M	3							150						
	4							198						
TGM3-400H	3							150						
	4							198						
TGM3-630L	3	281	496	518	243	15	303	210	70	45	155	103	40	6
	4							280						
TGM3-630M	3							210						
	4							280						
TGM3-630H	3							210						
	4							280						
TGM3-800L	3	281	496	518	243	15	303	210	70	45	155	103	40	6
	4							280						
TGM3-800M	3							210						
	4							280						
TGM3-800H	3							210						
	4							280						

TGM3 Series Moulded Case Circuit Breaker

Continued Table 9

Model	Number of poles	Outline dimension (mm)											Installation dimension (mm)		
		H4	H5	H6	H7	A	B	C	D	E	F	G	L3	W3	φd
TGM3-63L	3	20.5	2.5	3.5	74	81.5	55	29.5	26	26.5	15.5	25	117	25	φ4.5
	4													50	
TGM3-63M	3													25	
	4													50	
TGM3-125L	3	25	3	/	78	96	66	33	32	28	16	30	129	30	φ4.5
	4													60	
TGM3-125M	3	28			97									30	
	4													60	
TGM3-125H	3													30	
	4													60	
TGM3-250L	3	25	4	4	78	97	67	31	37	33	14	35	125	35	φ5
	4													70	
TGM3-250M	3	23			95									35	
	4													70	
TGM3-250H	3													35	
	4													70	
TGM3-400L	3	38	2.5	5	114	155	109	46	46	58	20	44	194	44	φ8
	4											94		94	
TGM3-400M	3											44		44	
	4											94		94	
TGM3-400H	3											44		44	
	4											94		94	
TGM3-630L	3	41	5	7	121	175	115	66	72	66	33	70	243	70	φ7
	4													140	
TGM3-630M	3													70	
	4													140	
TGM3-630H	3													70	
	4													140	
TGM3-800L	3	41	5	7	121	175	115	66	72	66	33	70	243	70	φ7
	4													140	
TGM3-800M	3													70	
	4													140	
TGM3-800H	3													70	
	4													140	

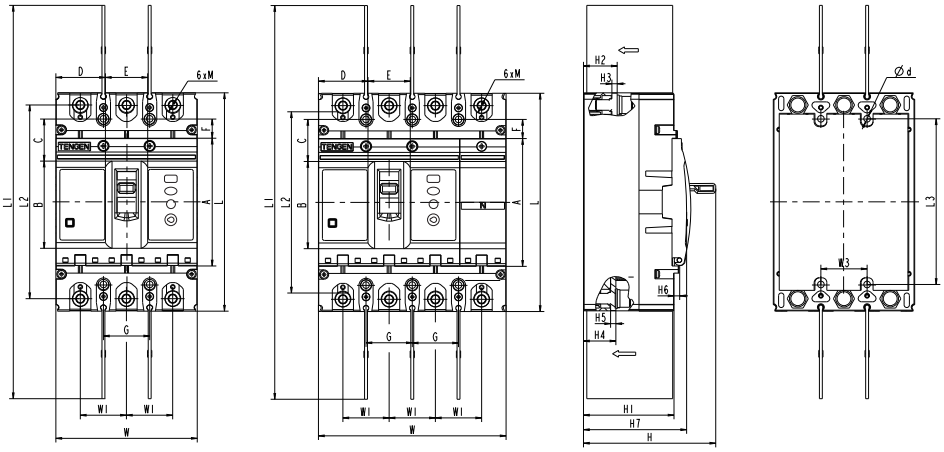

Figure 1 Outline and installation dimension (non-zero flashover)

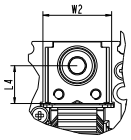

TGM3 Series Moulded Case Circuit Breaker

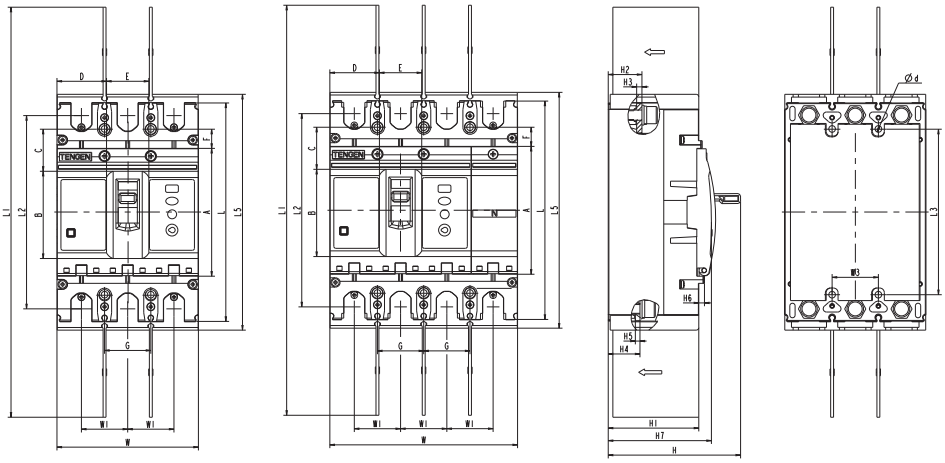

Figure 2 Outline dimension and installation dimension (zero flashover)

8.2 Outline and installation dimension of plug-in front panel connection type (See Figure 3 and Table 10)

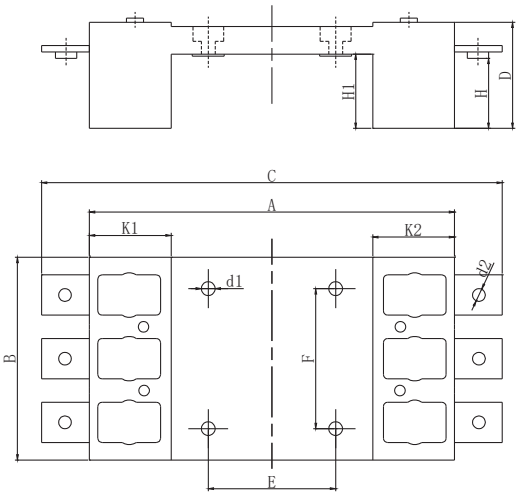

Outline and installation dimension of plug-in front panel connection type

Table 10

Model and specification	Outline and installation dimension (mm)											
	A	B	C	D	E	F	H	H1	K1	K2	d1	d2
TGM3-125	172	96	217	50	60	66	13	35	38	38	7	Φ8
TGM3-250	183	110	261	51.5	64	70	42.5	35	44	44	7	Φ8
TGM3-400	276	150	352	80	135	115	31	Flat	Flat	Flat	8.5	Φ11
TGM3-630/800	305	210	409	87	144	90	16	61	62	62	11	Φ13

8.3 Outline and installation dimension of plug-in rear panel connection type (See Figure 4 and Table 11)

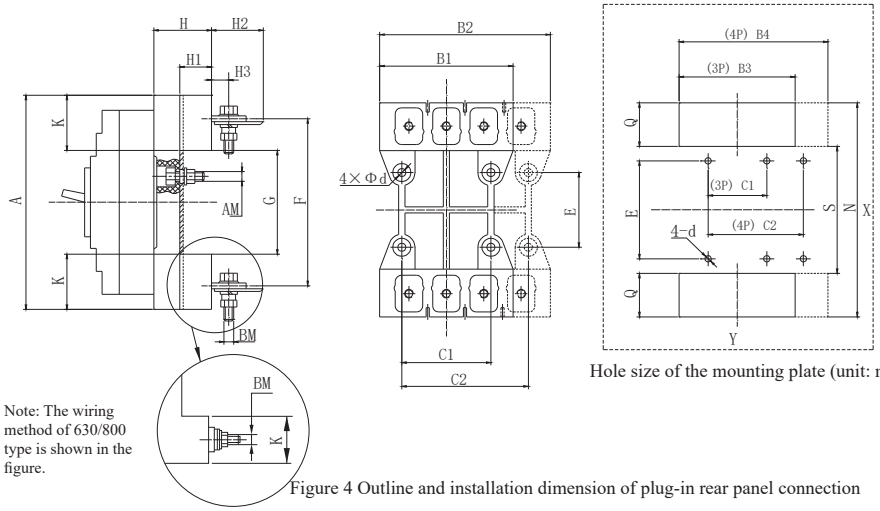

Hole size of the mounting plate (unit: mm)

Note: The wiring method of 630/800 type is shown in the figure.

Figure 4 Outline and installation dimension of plug-in rear panel connection

Table 11

Model and specification	Outline and installation dimension (mm)																			
	A	B1	B2	C1	C2	E	F	G	K	H	H1	H2	N	S	Q	B3	B4	AM	BM	4-d
TGM3-63	141	75	100	50	75	63	123	104	17	28	18.5	15	151	94	27	85	110	/	/	φ6
TGM3-125	168	91	125	60	90	60	132	92	38	50	33	28	178	82	48	101	135	M6	M8	Φ65
TGM3-250	186	107	145	70	105	54	145	94	46	50	33	37	196	84	56	117	155	M6	M8	Φ65
TGM3-400	280	149	200	60	108	129	224	170	55	60	38	46	290	160	65	159	210	M8	M12	Φ85
TGM3-630/800	305	210	280	90	162	146	242	181	62	87	60	22	315	171	72	220	290	M10	M14	Φ11

9 Ordering Notice

Please specify following matters when ordering:

a) Model, name and Number of poles of the circuit breaker.

b) Rated current of circuit breakers.

c) Name, specification and combination code of accessories of the circuit breaker; When undervoltage release and shunt release are used, please specify the operational voltage (or control power supply voltage) values.

d) Usage: For power distribution (be delivered as for power distribution by default if not specified) and for motor protection (represented by 2).

e) Quantity.

For example: 20 sets of TGM3-250, 3-pole, 65kA creaking capacity, rated current of 225A, with a shunt release, AC 400V.

Fill in: TGM3-250H/3310 225A AC400V 20 sets.

For special requirements to the circuit breaker, please negotiate with the manufacturer.

TGM3E Series Moulded Case Circuit Breaker

1. Body
2. Flame arresting chamber (optional to customers)
3. Plug-in type (optional to customers)
4. Flash barrier (standard)
5. Zero flashover cover (optional to customers)
6. Undervoltage release (optional to customers)
7. Shunt release (optional to customers)
8. Alarm contact (optional to customers)
9. Auxiliary contact (optional to customers)
10. Front panel connection transition plate (optional to customers)
11. Electric motor operating mechanism (optional to customers)
12. Rotating handle operating mechanism (optional to customers)
13. Communication shunt alarm accessory (optional to customers)
14. Four-remote communication accessory (optional to customers)

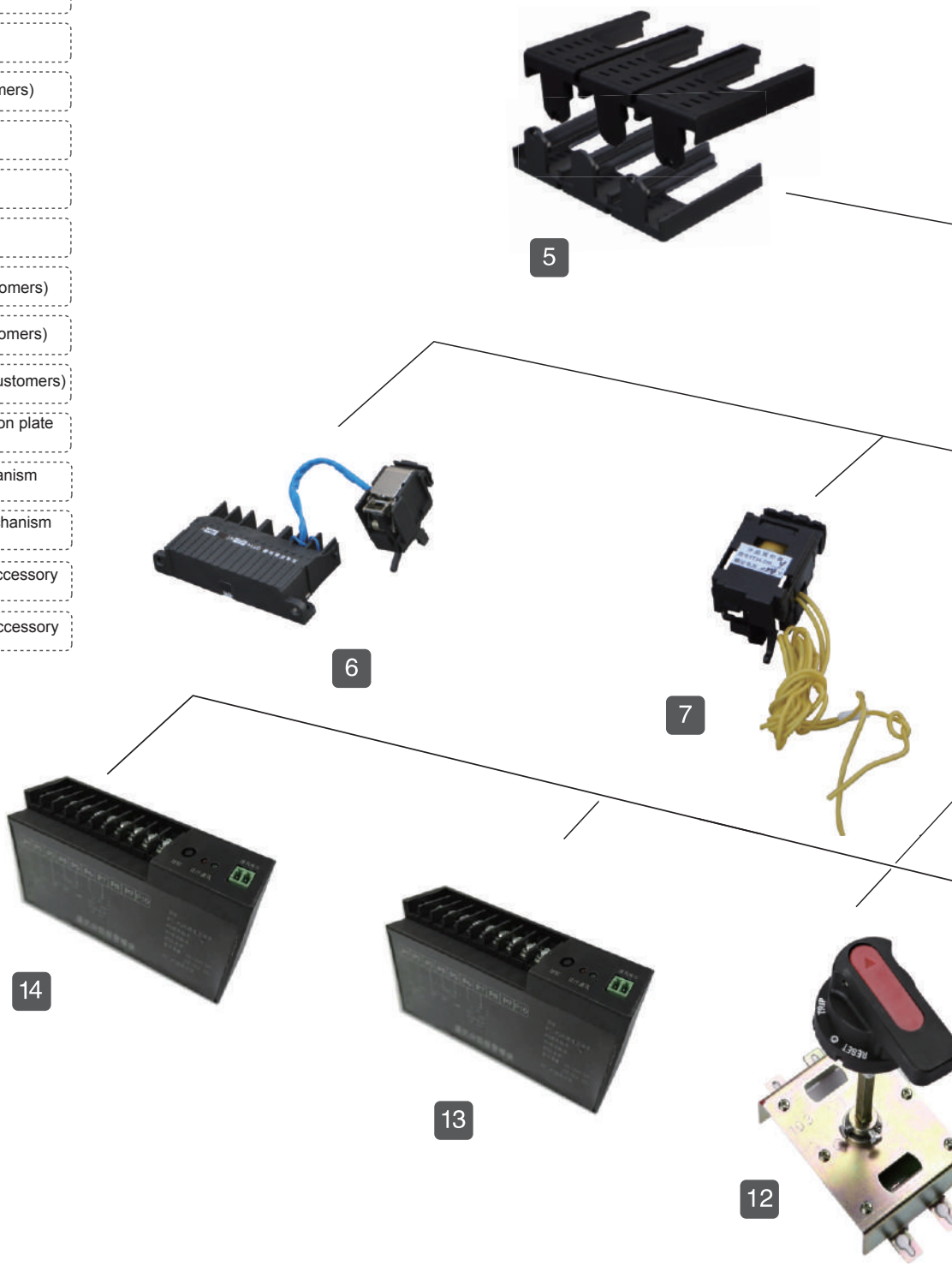

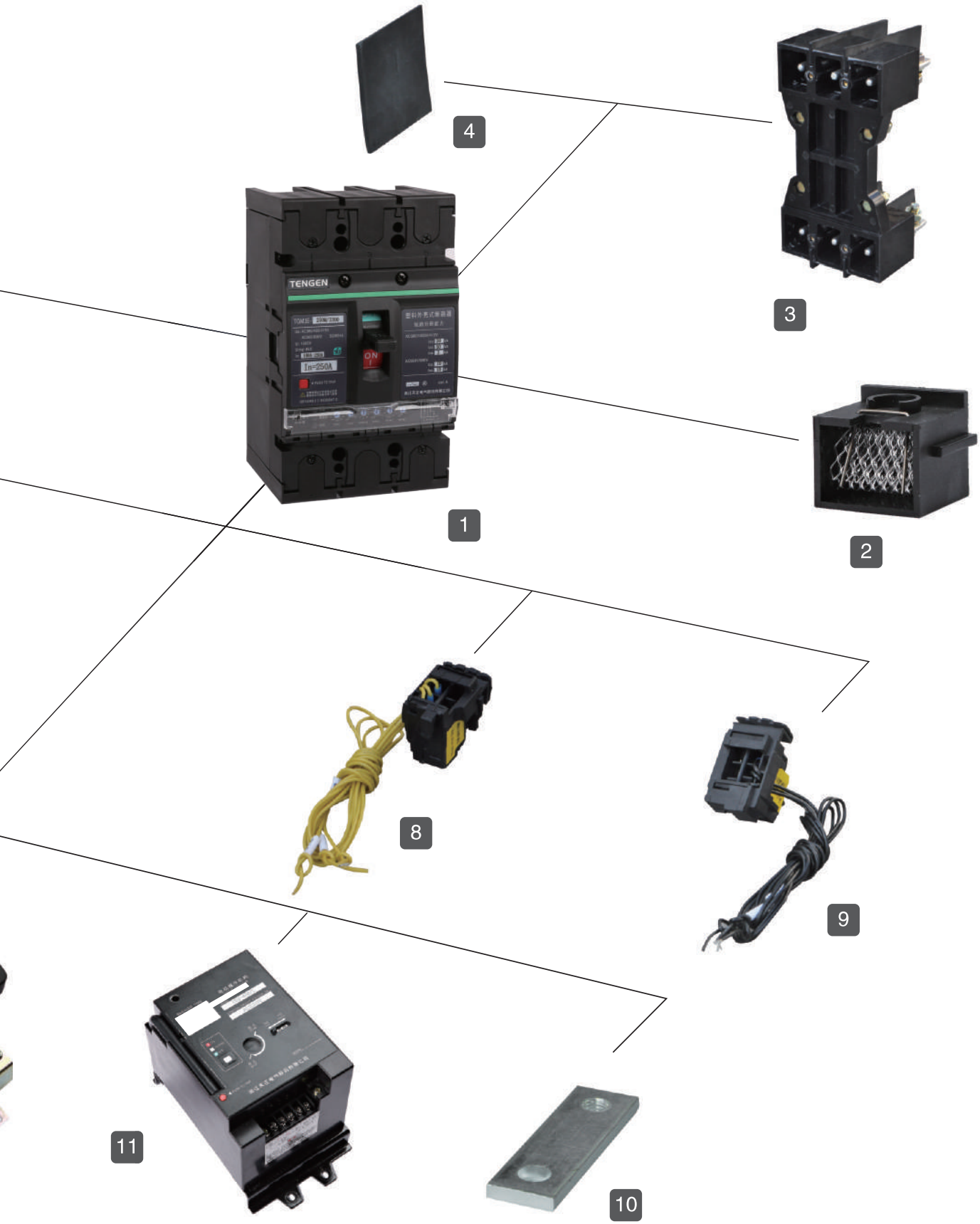
4
3
TENGEN
In=250A
ON
1
2
8
9
11
10

TGM3E Series Moulded Case Circuit Breaker

1 Overview

TGM3E Series Moulded Case Circuit Breaker (hereinafter referred to as circuit breaker) is one of the new circuit breakers researched and developed by us with international advanced technology. It has the characteristics of four sections of selective protection, zero flashover, high breaking, box-type accessories, small and compact structure, green and environmental protection.

By rated limit short-circuit breaking capacity (Icu), the circuit breaker is divided into M type (relatively high breaking) and H (high breaking). It is an ideal product for power distribution and motor protection. It has the rated isolation voltage of 1,000V. It can be used for occasional circuit switch and startup of motor in circuits under AC 50/60Hz, with the rated working voltage ≤690V and setting current of 12.5A-1,250A.

The circuit breaker can be equipped with communication modules, so as to upgrade the original circuit breaker to a communication circuit breaker easily, achieving “four remote” functions, namely remote control, remote adjustment, remote measurement and remote signaling.

The circuit breaker has the functions of overload long-time delay, short circuit short-time delay, short circuit instantaneous action and ground protection. Undervoltage, shunt, auxiliary, alarm and communication accessories are optional to the product.

This series circuit breaker may be installed vertically (i.e., vertical installation) or horizontally (i.e., horizontal installation).

It is has isolating function, with the corresponding symbol of:

Note: 3P+N type without isolating function has a unique “overload alarm without tripping” function, to ensure the continuity of power supply.

The circuit breaker shall meet the standard: IEC 60947-1 and IEC 60947-2.

2 Type Designation

TG M 3 E — □□□/□□□□□□□□□□□□□□

- Special requirements
- Code of zero flashover:
  No code: standard; W- zero flashover;
- Code of application scenarios: No code: standard;
- Installation mode:
  No code: Fixed, front panel connection;
  B: fixed, rear-panel connection; C: plug-in type;
- Voltage of accessories
- Rated current
- Controller function code:
  Default: Pre-alarm type controller E1: three-knob controller E2: Current unbalance type controller E3: Grounding type controller E4: Neutral pole protection controller
- Code of overload alarm without tripping:
  No code: standard; III: Overload alarm without tripping;
- Code of prepayment:
  No code: standard; F-prepaid;
- Code of N pole of 3N and 4P products (Table 1)
- Usage code: No code : For distribution,;
  2: Motor protection;
- Release type and accessory code (Table 2)
- Code of Number of poles:
  3: 3P; 3N : three-pole and four-line; 4 : 4P;
- Code of operation mode:
  No code : Direct operation with handle;
  P: Electric motor operation;
  Z: Rotating handle;
- Breaking capacity:
  M type: Medium breaking
  H type: High breaking L type: Standard breaking
- Frame current
- Electronic
- Design code
- Moulded case circuit breaker
- Enterprise code

TGM3E Series Moulded Case Circuit Breaker

Table 1

Code	Statement	Example
Type A	N pole is not equipped with over-current tripping element, has been connected with all along, and does not act with other three poles	3N300A
Type B	N pole is not equipped with over-current tripping element, and acts with other three poles (N-pole turn on prior to turn off)	4300B
Type C	N pole is equipped with over-current tripping element, and acts with other three poles (N-pole turn on prior to turn off)	4300C
Type D	N pole is equipped with over-current tripping element, has been connected with all along, and does not act with other three poles	3N300D

View of codes of 4-pole product

Without overcurrent release

Type A: N pole is not equipped with over-current tripping element, has been connected with all along, and does not act with other three poles.

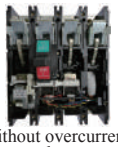

Without overcurrent release

Type B: N pole is not equipped with over-current tripping element, and acts with other three poles (N-pole turn on prior to turn off).

With overcurrent release

Type C: N pole is equipped with over-current tripping element, and acts with other three poles (N-pole turn on prior to turn off).

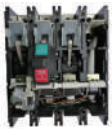

With overcurrent release

Type D: N pole is equipped with over-current tripping element, has been connected with all along, and does not act with other three poles.

3 Operating Conditions

3.1 Ambient air temperature is -5ºC to +40ºC;

3.2 The relative air humidity at the installation site shall not exceed 50% at a maximum temperature of +40ºC. A higher relative humidity is allowed at the lower temperature. For example, the relative humidity can reach 90% at 20ºC. Special measures should be taken to deal with occasional condensation due to temperature changes;

3.3 Pollution degree is 3;

3.4 The circuit breaker is required to withstand mechanical vibration with the frequency of 2Hz-13.2Hz, displacement of ±1mm and mechanical vibration with the frequency of 13.2Hz-100Hz and accelerated velocity of ±0.7g;

3.5 The installation category is III for main circuits of the circuit breaker and II for other auxiliary circuits and control circuits;

3.6 The circuit breaker shall be applicable to electromagnetic environment B;

3.7 Hot and humid band type (TH type) circuit breaker can withstand the effect of damp air, salt mist, oil mist and mold;

3.8 The circuit breakers should be installed in a place without explosive hazard, conductive dust and corrosion against metal and damage to insulation;

3.9 The circuit breaker shall be installed in the place without invasion of rain and snow;

3.10 Operation conditions:

3.10.1 The ambient air temperature shall be from -30ºC to +70ºC (derate when the temperature exceeds; see the technical materials in the sample for details);

3.10.2 The characteristic shall not be affected when the altitude is 2,000 meters (derate when above 2,000 m; see the technical materials in the sample for details);

3.10.3 The ambient air temperature for storage shall be -40ºC- +75ºC.

3.11 The protection grade of the product body is IP20

3.12 Cabinet door installation

With toggle handle: Protection grade is IP40.

With rotation handle: Protection grade is IP50.

With motor-operated mechanism: Protection grade is IP40.

TGM3E Series Moulded Case Circuit Breaker

4 Tripper Mode and Accessary Code

Release mode and accessary code

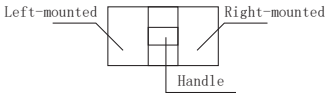

Alarm contact ● Auxiliary contact ○
Shunt release ■ Undervoltage release ▲

Table 2

	Accessory Code	Accessory installation and lead mode					
Accessory Name		TGM3E-125/160		TGM3E-250/320		TGM3E-400 TGM3E-630 TGM3E-800 TGM3E-1250 customized	
No accessories	300						
Alarm contact	308						
Shunt release	310						
Auxiliary contact	320						
Undervoltage release	330						
Shunt tripper Auxiliary contact	340						
Shunt release Undervoltage release	350						
Two groups of auxiliary contacts	360						
Auxiliary contact Undervoltage release	370						
Shunt release Alarm contact	318						
Auxiliary contact Alarm contact	328						
Undervoltage release Alarm contact	338						
Shunt release Auxiliary contact Alarm contact	348						
Two groups of auxiliary contacts Alarm contact	368						
Undervoltage release Auxiliary contact Alarm contact	378						

Note:4-pole products with 400 and aboveframes do not have right alarm contacts or auxiliary alarm contacts.

TGM3E Series Moulded Case Circuit Breaker

5 Technical Parameters

5.1 Product parameters (Table 3 and Table 4).

Table 3

Basic Information											
Frame current		125			160			250		320	
Number of poles		3P、3P+N、4P			3P、3P+N、4P			3P、3P+N、4P		3P、3P+N、4P	
Frequency (Hz)		50/60			50/60			50/60		50/60	
Rated working voltage Ue(V)		380/400/415 660/690			380/400/415 660/690			380/400/415 660/690		380/400/415 660/690	
Rated insulation voltage Ui(V)		1000			1000			1000		1000	
Rated impulse withstand voltage Uimp (kV)		8			8			8		8	
Rated working current In(A)		32AF:12.5 ～ 32 63AF:25 ～ 63 125AF:50 ～ 125			63AF:25 ～ 63 125AF:50 ～ 125 160AF:63 ～ 160			250AF:100 ～ 250		320AF:125 ～ 320	
Breaking capacity level		L	M	H	L	M	H	M	H	M	H
Breaking capacity of rated limiting short circuit Icu(kA)	AC415V	36	50	85	36	50	85	50	85	50	85
	AC690V	8	10	20	8	10	20	10	20	10	20
Breaking capacity of rated operating short circuit Ics(kA)	AC415V	36	50	50	36	50	50	50	50	50	50
	AC690V	5	10	10	5	10	10	10	10	10	10
Rated short-time withstand current Icw(kA/1s)	AC415V	2	2	2	2.5	2.5	2.5	3	3	4	4
Isolating function		3P, 4P			3P, 4P			3P, 4P		3P, 4P	
Usage category		Category A			Category A			Category A		Category A	
Flashover distance (mm)		0[1)]/≤50			0[1)]/≤50			0[1)]/≤50		0[1)]/≤50	
Mechanical life (times)	Without maintenancein	20,000			20,000			20,000		20,000	
	With With maintenance	40,000			40,000			40,000		40,000	
Electrical life (times)		10,000			10,000			10,000		10,000	

Protection function information				
Overload long-time delay protection	■ (Standard)	■ (Standard)	■ (Standard)	■ (Standard)
Short circuit short-time delay protection	■ (Standard)	■ (Standard)	■ (Standard)	■ (Standard)
Instantaneous short circuit protection	■ (Standard)	■ (Standard)	■ (Standard)	■ (Standard)
Ground protection	□ (Optional)	□ (Optional)	□ (Optional)	□ (Optional)
Neutral pole protection	□ (Optional)	□ (Optional)	□ (Optional)	□ (Optional)
Current unbalance protection	□ (Optional)	□ (Optional)	□ (Optional)	□ (Optional)

Other functional information				
Communication function	□ (Optional)	□ (Optional)	□ (Optional)	□ (Optional)
Overload alarm without tripping	□ (Optional)	□ (Optional)	□ (Optional)	□ (Optional)
Operation LED indicator	■ (Standard)	■ (Standard)	■ (Standard)	■ (Standard)
Pre-alarm LED indicator	■ (Standard)	■ (Standard)	■ (Standard)	■ (Standard)
Alarm LED indicator	■ (Standard)	■ (Standard)	■ (Standard)	■ (Standard)

Accessories information				
Direct operation with handle	■ (Standard)	■ (Standard)	■ (Standard)	■ (Standard)
Extended rotating handle	□ (Optional)	□ (Optional)	□ (Optional)	□ (Optional)
Electric motor operating mechanism	□ (Optional)	□ (Optional)	□ (Optional)	□ (Optional)
Shunt release	□ (Optional)	□ (Optional)	□ (Optional)	□ (Optional)
Undervoltage release	□ (Optional)	□ (Optional)	□ (Optional)	□ (Optional)
Auxiliary contact	□ (Optional)	□ (Optional)	□ (Optional)	□ (Optional)
Alarm contact	□ (Optional)	□ (Optional)	□ (Optional)	□ (Optional)
Fixed, front panel connection	■ (Standard)	■ (Standard)	■ (Standard)	■ (Standard)
Fixed, rear-panel connection	□ (Optional)	□ (Optional)	□ (Optional)	□ (Optional)
Plug-in, front-panel connection (not optional to 4P products)	□ (Optional)	□ (Optional)	□ (Optional)	□ (Optional)
Plug-in rear-panel connection	□ (Optional)	□ (Optional)	□ (Optional)	□ (Optional)
Front-panel connection transition plate	□ (Optional)	□ (Optional)	□ (Optional)	□ (Optional)
Flash barrier	■ (Standard)	■ (Standard)	■ (Standard)	■ (Standard)
Handle lock	□ (Optional)	□ (Optional)	□ (Optional)	□ (Optional)
Zero flashover accessories	□ (Optional)	□ (Optional)	□ (Optional)	□ (Optional)
Convertor	□ (Optional)	□ (Optional)	□ (Optional)	□ (Optional)

Note 1): Select zero flashover accessories to achieve zero flashover
125L and 160L products for 3P only

TGM3E Series Moulded Case Circuit Breaker

Table 4

Basic Information							
Frame current		400		630		800	
Number of poles		3P、3P+N、4P		3P、3P+N、4P		3P、3P+N、4P	
Frequency (Hz)		50/60		50/60		50/60	
Rated working voltage Ue(V)		380/400/415 660/690		380/400/415 660/690		380/400/415 660/690	
Rated insulation voltage Ui(V)		1000		1000		1000	
Rated impulse withstand voltage Uimp (kV)		12		12		12	
Rated working current In(A)		400AF:160~400		630AF:250~630		630AF:250~630 800AF:315~800	
Breaking capacity level		M	H	M	H	M	H
Breaking capacity of rated limiting short circuit Icu(kA)	AC415V	70	100	70	100	70	100
	AC690V	20	30	20	30	20	30
Breaking capacity of rated operating short circuit Ics(kA)	AC415V	70	70	70	70	70	70
	AC690V	20	20	20	20	20	20
Rated short-time withstand current Icw(kA/1s)	AC415V	10	10	10	10	10	10
Isolating function		3P, 4P		3P, 4P		3P, 4P	
Usage category		Category B		Category B		Category B	
Flashover distance (mm)		0[1)]/≤100		0[1)]/≤100		0[1)]/≤100	
Mechanical life (times)	Without maintenancein	10,000		10,000		8,000	
	With With maintenance	20,000		20,000		10,000	
Electrical life (times)		8,000		8,000		7,500	
Protection function information							
Overload long-time delay protection		■ (Standard)		■ (Standard)		■ (Standard)	
Short circuit short-time delay protection		■ (Standard)		■ (Standard)		■ (Standard)	
Instantaneous short circuit protection		■ (Standard)		■ (Standard)		■ (Standard)	
Ground protection		□ (Optional)		□ (Optional)		□ (Optional)	
Neutral pole protection		□ (Optional)		□ (Optional)		□ (Optional)	
Current unbalance protection		□ (Optional)		□ (Optional)		□ (Optional)	
Other functional information							
Communication function		□ (Optional)		□ (Optional)		□ (Optional)	
Overload alarm without tripping		□ (Optional)		□ (Optional)		□ (Optional)	
Operation LED indicator		■ (Standard)		■ (Standard)		■ (Standard)	
Pre-alarm LED indicator		■ (Standard)		■ (Standard)		■ (Standard)	
Alarm LED indicator		■ (Standard)		■ (Standard)		■ (Standard)	
Accessories information							
Direct operation with handle		■ (Standard)		■ (Standard)		■ (Standard)	
Extended rotating handle		□ (Optional)		□ (Optional)		□ (Optional)	
Electric motor operating mechanism		□ (Optional)		□ (Optional)		□ (Optional)	
Shunt release		□ (Optional)		□ (Optional)		□ (Optional)	
Undervoltage release		□ (Optional)		□ (Optional)		□ (Optional)	
Auxiliary contact		□ (Optional)		□ (Optional)		□ (Optional)	
Alarm contact		□ (Optional)		□ (Optional)		□ (Optional)	
Fixed, front panel connection		■ (Standard)		■ (Standard)		■ (Standard)	
Fixed, rear panel connection		□ (Optional)		□ (Optional)		□ (Optional)	
Plug-in, front panel connection (not optional to 4P products)		□ (Optional)		□ (Optional)		□ (Optional)	
Plug-in rear panel connection		□ (Optional)		□ (Optional)		□ (Optional)	
Front panel connection transition plate		□ (Optional)		□ (Optional)		□ (Optional)	
Flash barrier		■ (Standard)		■ (Standard)		■ (Standard)	
Handle lock		□ (Optional)		□ (Optional)		□ (Optional)	
Zero flashover accessories		□ (Optional)		□ (Optional)		□ (Optional)	
Convertor		□ (Optional)		□ (Optional)		/	
Note 1): Select zero flashover accessories to achieve zero flashover							

TGM3E Series Moulded Case Circuit Breaker

Table 4 continued

Basic Information					
Frame current		1250		1600	
Number of poles		3P, 4P		3P, 4P	
Frequency (Hz)		50/60		50/60	
Rated working voltage Ue(V)		380/400/415/500/550/660/690			
Rated insulation voltage Ui(V)		1000		1000	
Rated impulse withstand voltage Uimp (kV)		12		12	
Rated working current In(A)		1250AF:500~1250		1000AF:400~1000 1600AF:630~1600	
Breaking capacity level		M	H	M	H
Breaking capacity of rated limiting short circuit Icu(kA)	AC415V	70	100	70	100
	AC550V	40	50	40	50
	AC690V	20	30	20	30
Breaking capacity of rated operating short circuit Ics(kA)	AC415V	70	70	70	70
	AC550V	30	40	30	40
	AC690V	20	20	20	20
Rated short-time withstand current Icw(kA/1s)	AC415V	20	20	20	20
Isolating function		3P		3P, 4P	
Usage category		Category B		Category B	
Flashover distance (mm)		0[1)]/ ≤ 100		0[1)]/ ≤ 100	
Mechanical life (times)	Without maintenancein	8,000		8,000	
	With With maintenance	10,000		10,000	
Electrical life (times)		1,000		1,000	

Protection function information		
Overload long-time delay protection	■ (Standard)	■ (Standard)
Short circuit short-time delay protection	■ (Standard)	■ (Standard)
Instantaneous short circuit protection	■ (Standard)	■ (Standard)
Ground protection	□ (Optional)	□ (Optional)
Neutral pole protection	□ (Optional)	□ (Optional)
Current unbalance protection	□ (Optional)	□ (Optional)
Other functional information		
Communication function	□ (Optional)	□ (Optional)
Overload alarm without tripping	□ (Optional)	□ (Optional)
Operation LED indicator	■ (Standard)	■ (Standard)
Pre-alarm LED indicator	■ (Standard)	■ (Standard)
Alarm LED indicator	■ (Standard)	■ (Standard)
Accessories information		
Direct operation with handle	■ (Standard)	■ (Standard)
Extended rotating handle	/	/
Electric motor operating mechanism	□ (Optional)	□ (Optional)
Shunt release	□ (Optional)	□ (Optional)
Undervoltage release	□ (Optional)	□ (Optional)
Auxiliary contact	□ (Optional)	□ (Optional)
Alarm contact	□ (Optional)	□ (Optional)
Fixed, front panel connection	■ (Standard)	■ (Standard)
Fixed, rear panel connection	/	/
Plug-in, front panel connection (not optional to 4P products)	/	/
Plug-in rear panel connection	/	/
Front panel connection transition plate	□ (Optional)	□ (Optional)
Flash barrier	■ (Standard)	■ (Standard)
Handle lock	/	/
Zero flashover accessories	/	/
Convertor	/	/
Note 1): Select zero flashover accessories to achieve zero flashover		

TGM3E Series Moulded Case Circuit Breaker

5.2 The application type: Power distribution type

The protection code of power distribution type TGM3E circuit breaker is no by default, with such functions as overload long-time delay + short circuit short-time delay + instantaneous short circuit protection. For example, the selection type is TGM3E - 125M/3300.

Table 5

Electronic tripper	Frame current Inm(A)	Rated current In(A)	Setting current of adjustable overload release IR(A)	Tripping characteristic/ time
Overload long-time delay	125	32	12.5-14-16-18-20-22-25-28-30-32	Act according to I^2t $1.05I_R$: do not act within 2h $1.3I_R$: do not act within 1h Inm<400A $2I_R$:t_R = (12-60-80-100) Inm ≥ 400A 2 I_R:t_R = (12-60-100-150)s Characteristic curve T= (2*I_R/I) 2*t_R (1.2I_R≤I ＜ Isd)
		63	25-28-32-36-40-45-50-56-60-63	
		125	50-56-63-70-75-80-90-100-110-125	
	160	63	25-28-32-36-40-45-50-56-60-63	
		125	50-56-63-70-75-80-90-100-110-125	
		160	63-70-80-90-100-110-125-140-150-160	
	250	250	100-110-125-140-150-160-180-200-225-250	
	320	320	125-140-160-180-200-225-250-280-300-320	
	400	400	160-180-200-225-250-280-315-350-375-400	
	630	630	250-280-315-350-375-400-450-500-560-630	
	800	630	250-280-315-350-375-400-450-500-560-630	
		800	315-350-400-450-500-560-630-700-760-800	
	1250	1000	IR=IR1+IR2 IR1=(0.4, 0.5, 0.6, 0.7, 0.8, 0.9, 1)*In IR2=(0.01, 0.02, 0.03, 0.04, 0.05, 0.06, 0.07, 0.08, 0.09)*In	2I_R:t_R = (8-12-16-24-32-48-64-96-128-256)
		1250		
	1600	1000		
		1600		
Action tolerance				±20%

5.3 The application type: Motor protection type

Table 6

Electronic tripper	Frame current Inm(A)	Rated current In(A)	Setting current of adjustable overload release IR(A)	Tripping characteristic/time
Overload long-time delay	125	32	12.5-14-16-18-20-22-25-28-30-32	Act according to I2t (see Table 7)
		63	25-28-32-36-40-45-50-56-60-63	
		125	50-56-63-70-75-80-90-100-110-125	
	160	63	25-28-32-36-40-45-50-56-60-63	
		125	50-56-63-70-75-80-90-100-110-125	
		160	63-70-80-90-100-110-125-140-150-160	
	250	250	100-110-125-140-150-160-180-200-225-250	
	320	320	125-140-160-180-200-225-250-280-300-320	
	400	400	160-180-200-225-250-280-315-350-375-400	Act according to I2t (see Table 8)
	630	630	250-280-315-350-375-400-450-500-560-630	
	800	630	250-280-315-350-375-400-450-500-560-630	
		800	315-350-400-450-500-560-630-700-760-800	
Action tolerance				±20%

Table 7

$1.05I_R$	Do not act within 2h			
$1.2I_R$	Do not act within 1h			
$1.5I_R$	21.3s	107s	142s	178s
$2I_R$	12s	60s	80s	100s
$7.2I_R$	0.93s	4.63s	6.17s	7.72s
Tripping level	/	10A	10	20

Table 8

$1.05I_R$	Do not act within 2h			
$1.2I_R$	Do not act within 1h			
$1.5I_R$	21.3s	107s	178s	267s
$2I_R$	12s	60s	100s	150s
$7.2I_R$	0.93s	4.63s	7.72s	11.6s
Tripping level	/	10	20	30

TGM3E Series Moulded Case Circuit Breaker

5.4 Short circuit short-time delay protection

Table 9

Electronic tripper	Frame current Inm(A)	Rated current In (A)	Setting current of short circuit short-time delay time for current adjustable type release Isd (A)	Tripping characteristic/time	
Short circuit short-time delay	Whole series	32-800	I_{sd}=(2-2.5-3-4-5-6-7-8-10-12)×I_R+OFF	When Isd ≤I ＜ 1.5Isd, inverse time-delay action tolerance ±20% characteristic curve T=(1.5×Isd/I)2×tsd When 1.5Isd ≤I ＜ Ii, definite time-delay action tsd=0.06s±0.02s; tsd=0.1s±0.03s; tsd=0.2s±0.04s; tsd=0.3s±0.06s;	
				It²ON range	It²OFF range
		1250-1600	I_{sd}=(2-3-4-5-6-7-8-10-12)×I_R+OFF	When Isd ≤I ＜ 1.5Isd, inverse time-delay action Tolerance of ±20%, characteristic curve T=(1.5×Isd/ I)2×tsd When 1.5Isd ≤I ＜ Ii, definite time-delay action tsd=0.05s±0.02s tsd=0.1s±0.03s tsd=0.15s±0.03s tsd=0.2s±0.04s tsd=0.3s±0.06s	When it is dialed to OFF interval, the inverse time-delay function is turned off, and only the definite time-delay action is enabled. When Isd ≤I ＜ Ii, definite time-delay action tsd=0.05s±0.02s tsd=0.1s±0.03s tsd=0.15s±0.03s tsd=0.2s±0.04s tsd=0.3s±0.06s

5.5 Instantaneous short circuit protection

Table 10

Electronic tripper	Frame current Inm(A)	Rated current In (A)	Setting current of short circuit short-time delay time for current adjustable type release Ii(A)	Tripping characteristic/time
Instantaneous short-circuit	Whole series	32-800	Ii=(4-6-7-8-10-11-12-13-14)×IR+OFF	When I ≤ 0.85Ii, do not act;
		1250-1600	I_i=(4-6-7-8-9-10-11-12-14)×I_R+OFF	When I ≥ 1.15Ii, the action time is < 0.08s
Action tolerance				±15%

5.6 Current unbalance protection

Table 11

Electronic tripper	Frame current Inm(A)	Rated current In (A)	Setting current of unbalanced current protection for adjustable type Iunbal (A)	Tripping characteristic/time
Current unbalance Protection	Whole series	32-800	I_{unbal}=(10-15-20-25-30-35-40-45-50)%×I_R+OFF	When I ≤ 0.9Iunbal, do not act; When I ≥ 1.1Iunbal, tunbal=(1-225)s, act;
Action tolerance				±15%

5.7 Ground protection, single-phase and three-phase current balance type

Table 12

Electronic tripper	Frame current Inm(A)	Rated current In (A)	Setting current of adjustable type for ground protection Ig (A)	Tripping characteristic/time
Ground protection	Whole series	32-800	I_g=(0.7-0.75-0.8-0.85-0.9-0.95-1)×I_R+OFF	When I≤ 1Ig, do not act; When I ≥ 1.1Ig, tg=(0.1-0.2-0.3-0.4)s, act
Action tolerance				±15%

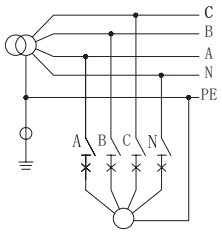

1. Only applicable to TN-S system
2. The ground protection function is used to balance the load. In case of unbalanced load, this function shall be closed or set the setting value above the allowable unbalanced current value

5.8 Neutral pole protection

Table 13

Electronic tripper	Frame current Inm(A)	Rated current In (A)	Setting current of adjustable tripper for ground protection Ig (A)	Tripping characteristic/time
Neutral pole protection	Whole series	32-1600	I_{RN}=(0.5-1)×I_R+OFF	Inm<400A 2IRN:tRN ＝ (12-60-80-100) Inm ≥ 400A 2IRN:tRN ＝ (12-60-100-150)s Characteristic curve T=(2*IRN/I)2*tRN (1.2IRN ≤ I<Isd)
Action tolerance				±15%

TGM3E Series Moulded Case Circuit Breaker

5.9 Overload pre-alarm

Table 14

Electronic tripper	Frame current Inm(A)	Rated current In (A)	Setting current of adjustable type for overload pre-alarm protection tripper Ip (A)	Tripping characteristic/time
Overload pre-alarm	Whole series	32-800	I_p=(0.7-0.75-0.8-0.85-0.9-0.95-1)×I_R+OFF	/

6 Electronic Tripper

6.1 Indicator status explanation

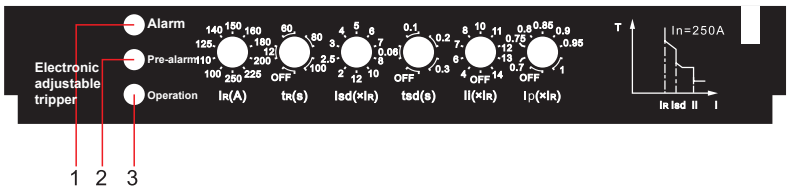

Table 15

	Instruction of indicator light	Instruction of indicator operating status
1	Alarm LED indicator (red)	When I ＞ 1.05IR, the overload alarm indicator light is on; when I≤1.0IR, the overload alarm indicator light is off;
2	Pre-alarm LED indicator (yellow)	When I ＞ 1.1Ip, the pre-alarm indicator light is on; when I≤0.9Ip, the pre-alarm indicator light is off.
3	Running LED indicator (green)	When I ＞ 0.4In, the operation indicator light flickers (once per second)

6.2 Three-knob intelligent controller (E1 type)

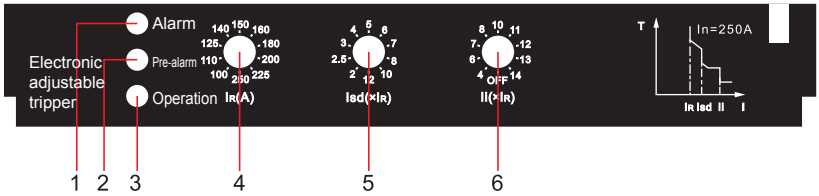

Table 16

Information of three-knob intelligent controller		
1	Alarm LED indicator	Default parameters 1Default setting value of overload long-time delay time tR=60s 2Default setting value of short circuit short-time delay time tsd=0.3s Default setting value of overload pre-alarm current Ip=0.9×IR
2	Pre-alarm LED indicator	
3	Operation LED indicator	
4	Setting current of overload long-time delay current IR(A)	
5	Setting current of short circuit short-time delay time Isd(A)	
6	Current setting of short-circuit short delay time Ii(A)	

6.3 Pre-alarm intelligent controller (conventional)

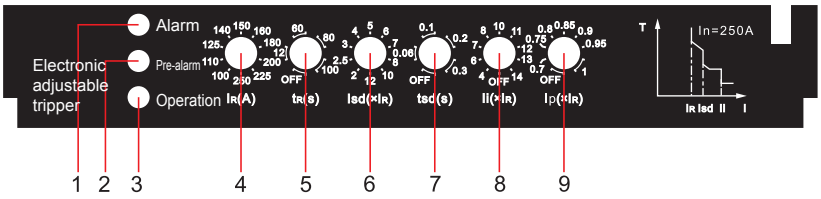

Table 17

Information of six-knob intelligent controller		
1	Alarm LED indicator light	Table 34 for default parameters
2	Pre-alarm LED indicator light	
3	Operation LED indicator light	
4	Setting current of overload long-time delay current IR(A)	
5	Setting value of overload long-time delay time tR(s)	
6	Setting current of short circuit short-time delay time Isd(A)	
7	Setting value of short circuit short-time delay time tsd(s)	
8	Current setting of short-circuit short delay time Ii(A)	
9	Setting current of overload pre-alarm Ip (A)	

6.4 Unbalanced current intelligent controller (E2 type)

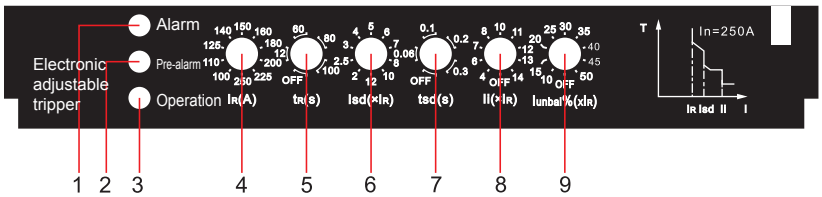

Table 18

Information of six-knob intelligent controller		
1	Alarm LED indicator	Default parameters 1 Setting value of unbalanced current time tunbal=10s 2 Default setting value of overload pre-alarm current Ip=0.9×IR
2	Pre-alarm LED indicator	
3	Operation LED indicator	
4	Setting current of overload long-time delay current IR(A)	
5	Setting value of overload long-time delay time tR(s)	
6	Setting current of short circuit short-time delay time Isd(A)	
7	Setting value of short circuit short-time delay time tsd(s)	
8	Current setting of short-circuit short delay time Ii(A)	
9	Setting unbalanced current Iunbal (A)	

6.5 Grounded intelligent controller (E3 type)

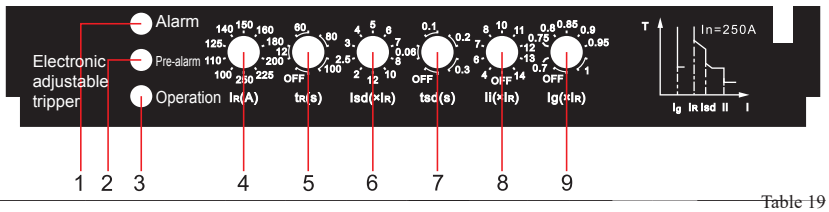

Table 19

Information of six-knob intelligent controller		
1	Alarm LED indicator	Default parameters 1 Setting value of ground protection time tg=0.4s 2 Default setting value of overload pre-alarm current Ip=0.9×IR
2	Pre-alarm LED indicator	
3	Operation LED indicator	
4	Setting current of overload long-time delay current IR(A)	
5	Setting value of overload long-time delay time tR(s)	
6	Setting current of short circuit short-time delay time Isd(A)	
7	Setting value of short circuit short-time delay time tsd(s)	
8	Current setting of short-circuit short delay time Ii(A)	
9	Setting current of ground protection lg(A)	

TGM3E Series Moulded Case Circuit Breaker

6.6 Neutral pole protection controller (E4 type)

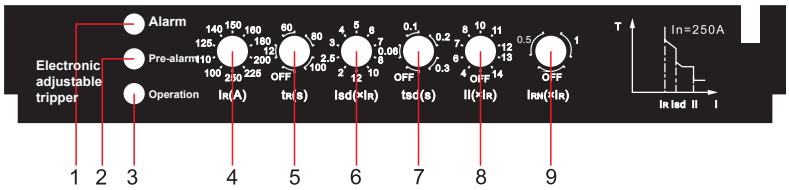

Table 20

Information of six-knob intelligent controller		
1	Alarm LED indicator	Default parameters 1 Default setting value of overload pre-alarm current Ip=0.9×IR
2	Pre-alarm LED indicator	
3	Operation LED indicator	
4	Setting current of overload long-time delay current IR(A)	
5	Setting value of overload long-time delay time tR(s)	
6	Setting current of short circuit short-time delay time Isd(A)	
7	Setting value of short circuit short-time delay time tsd(s)	
8	Current setting of short-circuit short delay time Ii(A)	
9	Setting current of neutral pole protection IRN(A)	

7 Technical Materials

7.1 Reference cross-sectional area of connecting wire for different rated currents

Table 21

Rated current In (A)	32	63	125	160	250	320	400
Cross-sectional area of conductor (mm^2)	6	16	50	70	120	185	240

Table 22

Rated current In (A)	Cable		Copper bar	
	Cross-section area (mm^2)	Quantity	Dimension (mm*mm)	Quantity
630	185	2	40×5	2
800	240	2	50×5	2
1250	/	/	80×5	2
1600	/	/	100×5	2

7.2 Power loss

Table 23

Model	Let-through current (A)	Total power consumption of 3 poles/4 poles (W)		
		Front and rear-panel connection	Plug-in front-panel connection	Plug-in rear-panel connection
TGM3E-125	125	12	12	12.2
TGM3E-160	160	40	50	62
TGM3E-250	250	50	75	86
TGM3E-320	320	55	80	89
TGM3E-400	400	58	87	90
TGM3E-630	630	110	120	130
TGM3E-800	800	115.2	125	140
TGM3E-1250	1250	200	/	/
TGM3E-1600	1600	/	/	/

7.3 Derating factor under different temperatures

Table 24

Model	Let-through current (A)	Ambient temperature					
		40℃	50℃	55℃	60℃	65℃	70℃
TGM3E-125	125	1In	1In	0.93In	0.92In	0.91In	0.89In
TGM3E-160	160	1In	1In	0.93In	0.92In	0.91In	0.89In
TGM3E-250	250	1In	1In	0.89In	0.85In	0.81In	0.78In
TGM3E-320	320	1In	1In	0.89In	0.85In	0.81In	0.78In
TGM3E-400	400	1In	1In	0.89In	0.85In	0.81In	0.78In
TGM3E-630	630	1In	1In	0.92In	0.9In	0.87In	0.86In
TGM3E-800	800	1In	1In	0.85In	0.82In	0.8In	0.78In
TGM3E-1250	1250	1In	1In	0.88In	0.87In	0.87In	0.85In
TGM3E-1600	1600	1In	1In	0.9In	0.86In	0.84In	0.8In

(1) For TGM3E circuit breakers, the derating factor is determined at the maximum rated current of each frame.

7.4 When the altitude exceeds 2,000 meters, the electrical performance of the circuit breaker shall be corrected according to the following table:

Table 25

Altitude (m)	2000	2500	3000	4000	5000
Power frequency withstand voltage (V)	3000	3000	2500	2000	1800
Insulation voltage (V)	1000	800	700	600	500
Maximum working voltage (V)	690	690	600	500	440
Working current correction factor	1In	1In	0.94In	0.88In	0.85In

7.5 Recommended tightening torques for the connecting cable/copper bar under different frame currents:

Table 26

Rated current (A)	Front-panel/rear-panel connection torque (N·m)
125/160	8.8~10
250/320	8.8~12
400/630	17.7~22.6
800	28~33
1250	28.8~39.2
1600	28.8~39.2

7.6 Screw tightening torque

Table 27

Model	TGM3E-125/160	TGM3E-250/320	TGM3E-400/630	TGM3E-800	TGM3E-1250	TGM3E-1600
Nominal diameter of thread (mm)	M8	M8	M10	M12	M10	M10
Tightening torque (N.m)	10	12	22	28	18	18
Failure moment (N.m)	15	18	26	33	22	22

8 Accessories

Product internal accessories

According to the needs of users, the circuit breaker accessories can be directly led out with wire (wire length of 50cm. For special requirements, please specify when ordering), or be equipped with terminal blocks (if needed, please specify when ordering).

TGM3E Series Moulded Case Circuit Breaker

- Shunt release (left-mounted and right-mounted)

Rated control power supply voltage (Us)	AC: AC220/230V, AC380/400V DC: DC24V, DC110V, DC220V
Action voltage	(0. 7~1. 1)Us
Wiring Diagram: 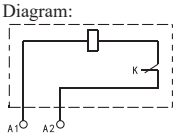 Power supply input	Note: The microswitch in the K-shunt tripper which is in series with the coil inside is normally closed contact; after opening of circuit breaker, the contact is automatically opened; at the closing, it is closed.

When the rated control power supply voltage is DC24V, the shunt tripper can be used directly. The maximum length is 150m for 1.5mm^2 copper lead (the length of each of the two leads) and 250m for 2.5mm^2 copper lead. The power at the terminal of the tripper shall meet the minimum power of 50W, or a DC24V intermediate relay shall be used for controlling AC230V or AC400V shunt tripper, and the contact capacity of the intermediate relay shall be no less than 1A.

- Undervoltage release (left-mounted and right-mounted)

Rated working voltage (Ue)	AC: AC220/230V, AC380/400V
Action feature	When the voltage is 35%-70% of the rated working voltage, it shall trip reliably, When the voltage is 85%-110% of the rated working voltage, it shall guarantee closing; When the voltage is lower than 35% of the rated working voltage, it shall prevent closing.
Wiring Diagram: 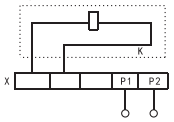 Power supply input	Note: X- terminal block. Note: (The circuit breaker internal accessory wiring diagram is in the dotted box.)

Attention: The undervoltage release must be energized first in order to re-buckle and close the circuit breaker, otherwise it will damage the circuit breaker.

- Auxiliary contact (left-mounted and right-mounted)

Fram rated current	Inm≤320A		Inm≥400A	
Conventional heating current Ith	3A		6A	
Usage category	AC-15	DC-13	AC-15	DC-13
Working voltage	AC380V/415V	DC 110V/250V	AC380V/415V	DC 110V/250V
Rated working current	0. 3A	0. 15A	1A	0. 15A

Wiring diagram

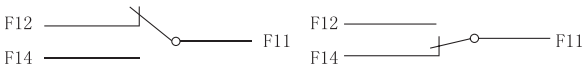

Status of the circuit breaker at "Opening" position

Status of the circuit breaker at "Closing" position.

- Manually operated mechanism:
  The outline and installation dimension of the rotating handle are shown in following figures and table:

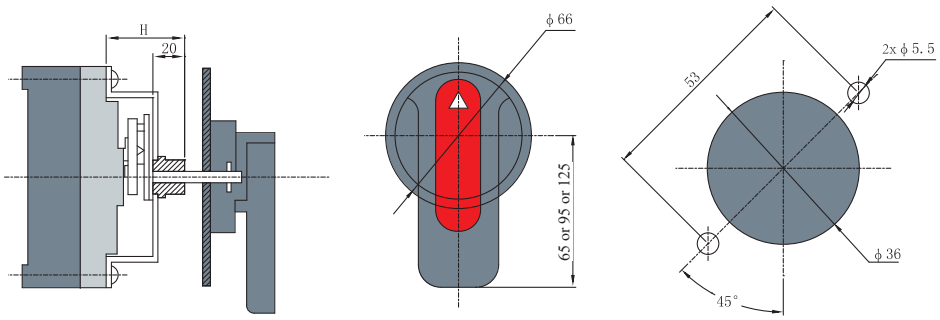

TGM3E Series Moulded Case Circuit Breaker

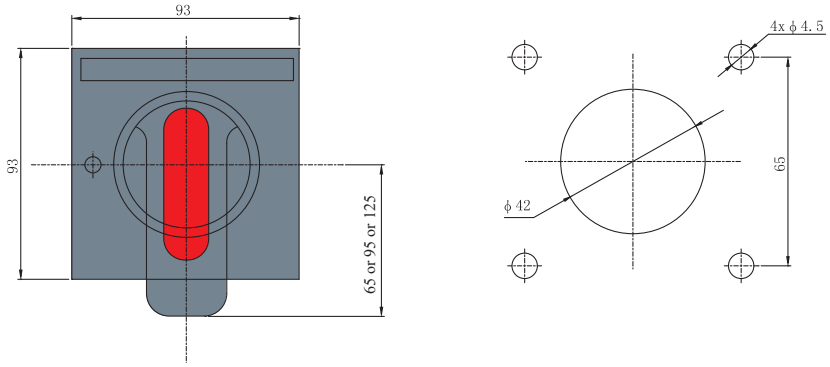

Outline and hole dimensions of the rotating handle

Table 28

Model and specification	TGM3E-125/160	TGM3E-250/320	TGM3E-400/630	TGM3E-800	TGM3E-1250	TGM3E-1600
Installation dimension (H)	61	57	87	92	/	/

● Alarm contact (left-mounted and right-mounted)

Conventional heating current Ith	3A
Rated working current Ie	Same as auxiliary contact

Wiring Diagram:

The circuit breaker is at free release (alarm) status.

Status of the circuit breaker at "Opening" and "Closing" position.

Product external accessories

● Electric Motor operating mechanism:

It is mounted on the panel of the circuit breaker, and is used for the remote closing, disconnecting and re-closing of the circuit breaker electrically. It is suitable for automatic control. See Table 29 for the outline dimension of the motor-operated mechanism

Input voltage	AC220V/230V, AC380V/400V
Wiring diagram	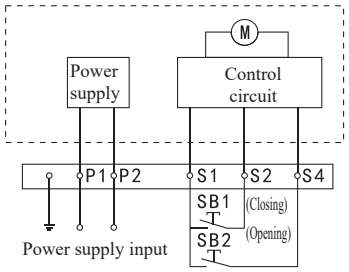 Note: P1 and P2 are inputs of external power supplies. SB1 and SB2 are operation buttons (prepared by users) Note: The wiring diagram of internal accessories of motor-operated mechanism is in the bashed box.

TGM3E Series Moulded Case Circuit Breaker

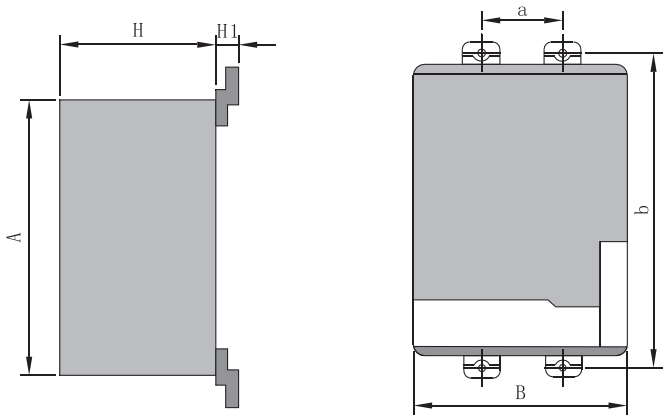

Table 29

Model	A	B	H	H1	a	b
TGM3E-125/160	111	73	77	20	30	134
TGM3E-250/300	116	90	77	17	35	146
TGM3E-400/630	176	130	115	30	44	194
TGM3E-800	176	130	115	27	70	243
TGM3E-1250	177	129.5	115	37	70	243
TGM3E-1600	177	130	115	37	70	303

Electronic accessories of the product
According to user demands, electronic accessories of the circuit breaker can be divided into shunt alarm communication accessory, four-remote communication accessory and communication LCD components.

● Shunt alarm communication accessory

It is mounted on the side of the switch, and is used to realize the remote communication of the circuit breaker, remote shunt tripping and alarm signal output of the circuit breaker. It is suitable for intelligent automation circumstances. See Table 29 for outline dimension of accessories.

Input voltage	AC400V/230V
Wiring diagram	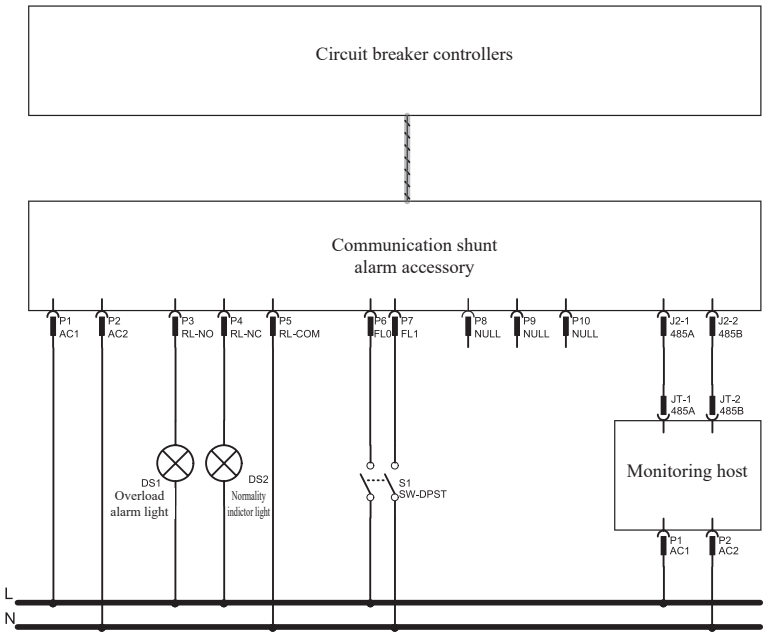

TGM3E Series Moulded Case Circuit Breaker

·Four-remote communication accessory

It is mounted on the side of the switch, and is used to achieve the “four-remote” function of the circuit breaker together with the auxiliary alarm accessory and motor-operated mechanism, i.e., remote control, remote adjustment, remote measurement and remote signaling. It is suitable for intelligent automation circumstances. See Table 31 for outline dimension of accessories.

Input voltage	AC400V/230V
Wiring diagram	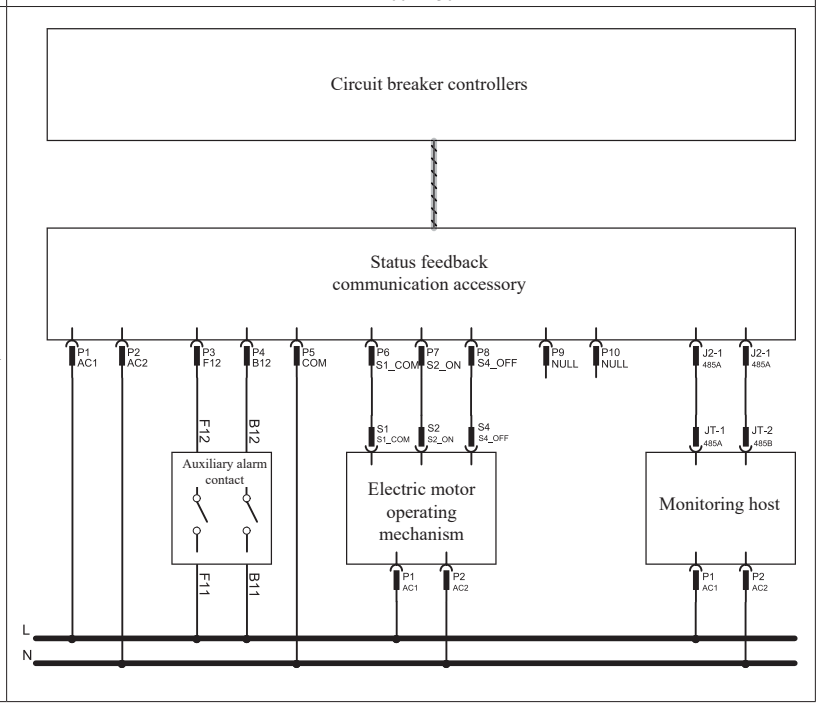

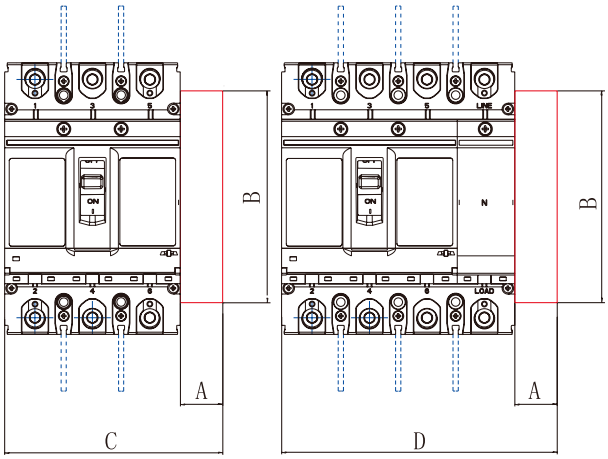

Table 30

Model and specification	Outline and installation dimension (mm)			
	A	B	C	D
TGM3E-125/160	25	125	117.5	147.5
TGM3E-250/320	25	125	132	167
TGM3E-400/630	25	125	175	223
TGM3E-800	25	125	235	305
TGM3E-1250	25	125	235	305
TGM3E-1600	25	125	235	305

TGM3E Series Moulded Case Circuit Breaker

9 Outline and Installation Dimensions

9.1 Outline and installation dimension (Table 31, Figure 1 and Figure 2)

Table 31

Model	Number of poles	Outline dimension																		Installation dimension			
		L	L1	L2	L3	L4	L5	W	W1	W2	W3	H	H1	H2	H3	H4	H5	H6	H7	A	B	H8[1]	Φd
TGM3E-125L	3	163	151	133	265	268	8.5	92.5	30	18	/	99	64	25	25	22	22	/	14.5	30	129	28	5
TGM3E-125 M/H	3	169	155	137	254		8	92.5	30	18	/	116	82	28.5	28.5	25.5	25.5	/	14.5	30	134	25	4.5
	4							122.5												60			
TGM3E-160L	3	163	151	133	265		8.5	92.5	30	18	/	99	64	25	25	22	22	/	14.5	30	129	28	5
TGM3E-160 M/H	3	169	155	137	254		8	92.5	30	18	/	116	82	28.5	28.5	25.5	25.5	/	14.5	30	134	25	4.5
	4							122.5												60			
TGM3E-250 M/H	3	180	165	146	300	315	12	107	35	23.6	/	116	85	22.5	22.5	18.5	18.5	2.3	8	35	126	60.5	4.5
	4							142												70			
TGM3E-320 M/H	3	180	165	146	300		12	107	35	23.6	/	116	85	22.5	22.5	18.5	18.5	2.3	8	35	126	60.5	4.5
	4							142												70			
TGM3E-400 M/H	3	285	257	224	471	500	12	150	48	33.2	/	151	98	39.5	37.8	34.5	35.5	5	10	44	194	47	8.5
	4							198												94			
TGM3E-630 M/H	3	285	257	224	471		12	150	48	33.2	/	151	98	40	41	34.5	35.5	5	10	44	194	47	8.5
	4							198												94			
TGM3E-800 M/H	3	304	281	243	494	515	16.4	212	70	45	/	157	104	40	44.5	34	33	7	11.5	70	243	73.4	7
	4							282												140			
TGM3E-1250 M/H	3	297	276	243	476	/	13	210	70	45.7	21.8	152	98.4	28.7	35.6	19	19	/	/	70	243	65	7.8
	4							280												140			
TGM3E-1600 M/H	3	363	340	310	555	/	15	210	70	51.6	27	195	136	41.5	57	/	/	/	/	70	303	101	7
	4							280												140			

Note 1): H8 is the proper length of the mounting screws on the product

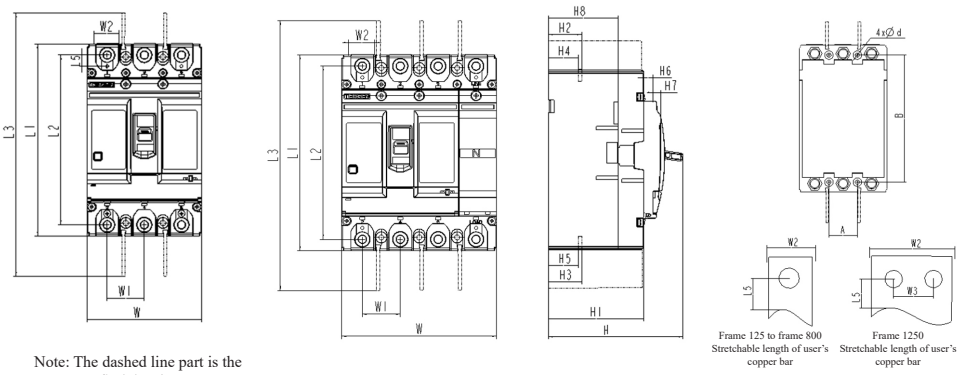

Note: The dashed line part is the flash barrier

Figure 1 Outline and installation dimension (non-zero flashover)

TGM3E Series Moulded Case Circuit Breaker

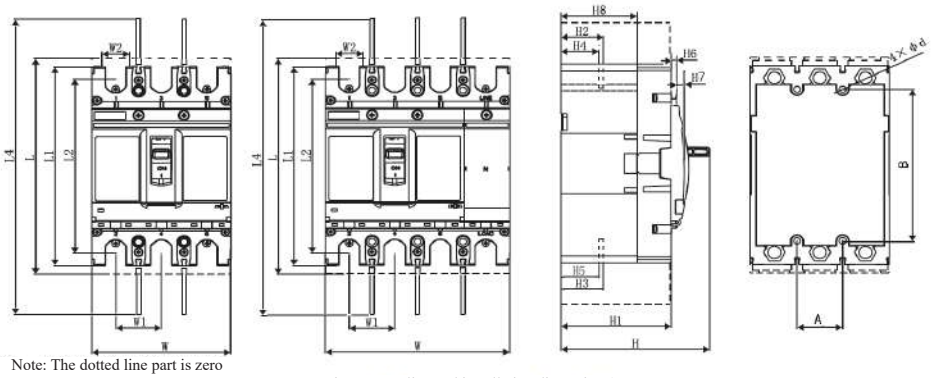

Note: The dotted line part is zero flashover hood

Figure 2 Outline and installation dimension (zero flashover)

9.2 The hole sizes of the handle and panel of the product (Table 32 and Figure 3)

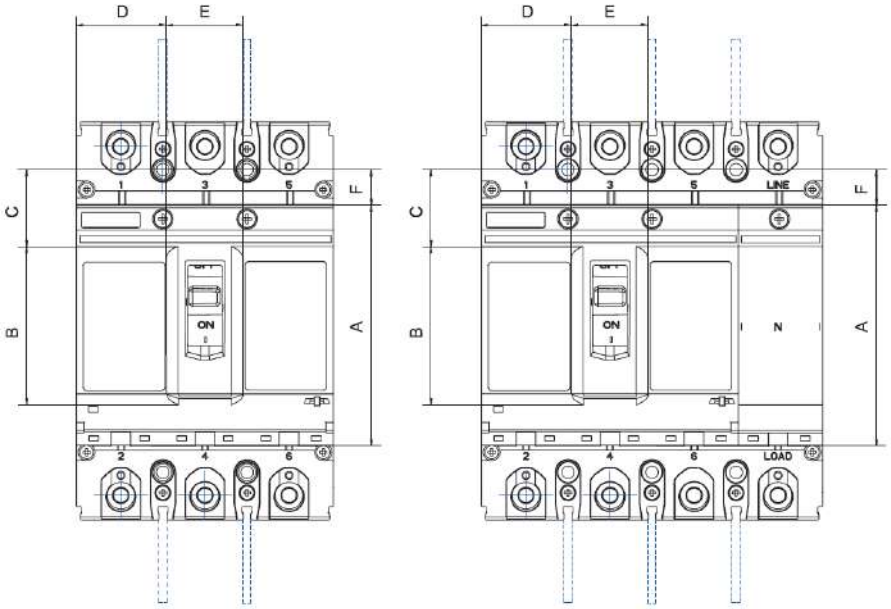

Figure 3 Hole sizes of the handle and panel

Table 32

Model and specification	Outline and installation dimension (mm)					
	A	B	C	D	E	F
TGM3E-125/160	101	68	33	32	29	16
TGM3E-250/320	100	67	32	37	33	15
TGM3E-400/630	162	107	46	46	58	20
TGM3E-800	177	116	54.4	73	67	20
TGM3E-1250	176	100	63	69	72	34
TGM3E-1600	210	120	92	58	99	56

TGM3E Series Moulded Case Circuit Breaker

9.3 Outline and installation dimension of plug-in type (Table 34 and Figure 4)

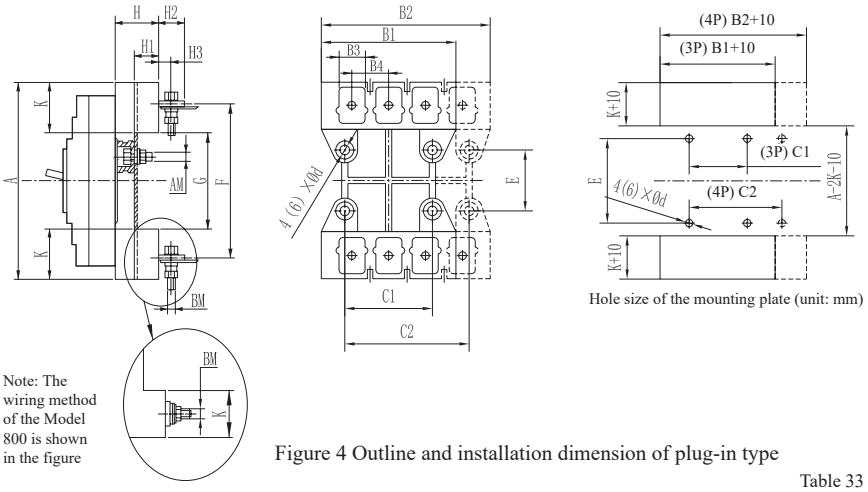

Figure 4 Outline and installation dimension of plug-in type

Table 33

Model and specification	Outline and installation dimension (mm)																	
	A	B1	B2	B3	B4	C1	C2	E	F	G	K	H	H1	H2	H3	AM	BM	Φd
TGM3E-125/160	174	91	125	20	30	60	90	63	137	98	38	50	33	35	15	M6	M8	6.5
TGM3E-250/320	185	107	145	22	35	70	105	56	143	94	45	50	33	37	20	M6	M8	6.5
TGM3E-400/630	280	150	200	31	48	60	108	129	224	170	55	60	38	46	22	M8	M12	8.5
TGM3E-800	303	210	280	/	71	90	162	143	242	180	62	87	60	/	/	M10	M14	11

Note: The maximum rated current of the 630 frame is 500A for the plug-in type, and the maximum rated current of 800 frame for the plug-in type is 700A.

10 The Protection Characteristic Curve of the Circuit Breaker

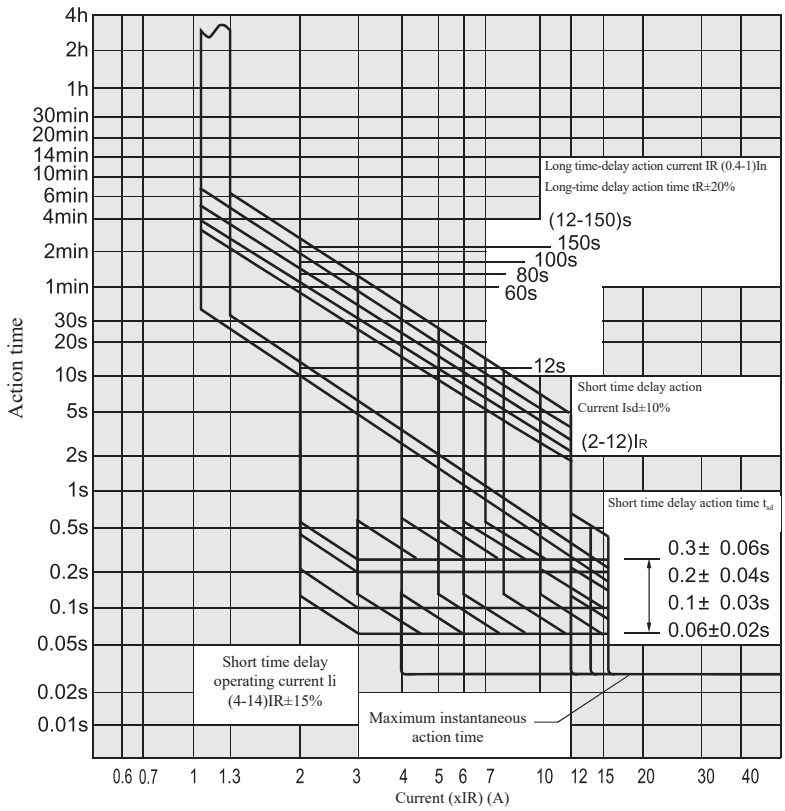

TGM3E Series Moulded Case Circuit Breaker

11 Setting of Factory Parameters of Intelligent Controller of the Circuit Breaker

Setting value of factory parameters

Table 34

	Protection type		Power distribution protection		Motor protection
4	Overload long delay	Set current I_R (A)	In		
5		Delay t_R (s)	60/64(1250)		100/96(1250)
6	Short circuit short delay	Set current I_{sd} (A)	8(XIR)		10(XIR)
7		Delay t_{sd} (s)	0.3		
8	Short circuit transient	Set current I_i (A)	Inm≤630A	12(XIR)	14(XIR)
			Inm≥800A	10(XIR)	
9 (Prewarming function is required as standard configurations, and other functions are optional)	Prewarning (conventional six-button type)	Delay I_p (A)	0.9(x IR)		
	Current unbalance protection (E2 type)	Set current I_{unbal} (A)	50%		
	Earthing protection (E3 type)	Delay I_g (A)	1.0(x IR)		
	Neutral pole protection (E4 type)	Set current I_{RN} (A)	1.0(x IR)		
Thermal simulation function		OFF			

12 Ordering Notice

Please specify following matters when ordering:
a) Model, name and Number of poles of the circuit breaker.
b) Rated current of circuit breakers.
c) Accessory name, specifications and combination code of the circuit breaker (the working voltage shall be specified for shunt tripper and undervoltage tripper).
d) Usage: For power distribution (be delivered as for power distribution by default if not specified) and for motor protection (represented by 2).
e) Quantity.
For example: 20 sets of TGM3E-250, 3-pole, 50kA, 250A, with shunt release, AC 400V. Fill in: TGM3E-250M/3310250AAC400V 20 sets.

For special requirements to the circuit breaker, please negotiate with the manufacturer.

13 Examples of Quick Selection

a) TGM3E-125M/3N300A125A:
i.e., order a TGM3E series electronic circuit breaker for power distribution protection, with 125A frame, 50kA (relatively high), rated current of 125A, 3-pole and 4-wire (i.e., 3P+N), without null line protection.

b) TGM3E-125M/33002125A:
i.e., order a TGM3E series electronic circuit breaker for motor protection, with 125A frame, 50kA (relatively high), rated current of 125A, 3 poles.

c) TGM3E-125H/3N300AE1W125A:
i.e., order a TGM3E series electronic circuit breaker for distribution protection, with 125A frame, 85kA (high breaking), rated current of 125A, 3-pole and 4-wire (i.e., 3P+N), with three-knob controller equipped with zero arc accessories, without null line protection.

Remarks: For special customized products, please consult us firstly.

TGM3E Series Moulded Case Circuit Breaker

14 Description of the Selection Table of TGM3E Series Moulded Case Circuit

TGM3E – 125 M Z / 4 3 00 2 A F III E1 125 AC230V B Plateau W

Model	Shell frame -level current	Breaking capacity	Operation mode	Pole number	Tripping mode	Internal accessories	Usage	N pole code	Additional information	Alarm module	Controller code	Rated current	Voltage of accessories	Installation mode	Applicable situation	Special requirements
TGM3E electronic moulded case circuit breaker	125: 125A 160: 160A	M: relatively high	Default: Direct operation	3: 3 poles	3: Electronic	00: no accessory 10: shunt release 20: auxiliary contact 30: Undervoltage release 40: shunt release+ auxiliary contact	Default: Power distribution protection	A: three protective poles. Null line is not broken with other poles.	Default: Without prepay-ment	Default: Overload alarm release	Default: Pre-alarm controller	125: 32A 63A 125A	AC380/400V AC220/230V DC220V DC110V DC24V	Default: Fixed, front-board wiring	Default: Conven-tional application	Default: Flash barrier
	250: 250A 320: 320A	H: high breaking	Z: rotating handle operation	3N : 3P+N		50: shunt release+ undervoltage release 60: two sets of auxiliary contacts 70: undervoltage release+ auxiliary contact 08: Alarm contact	2: Motor protection	B: three protective poles. Null line is broken with other poles.	F: Prepay-ment	III: Overload alarm without tripping	E1: Three-knob controller	160: 63A 125A 160A	Multiple accessory voltages shall be described separately (for example: Shunt AC23 OV, undervolt-age AC400V)	B: Fixed, rear-board wiring	Plateau Damp heat Environmen-tal protection Salt mist Low temperature	w: Zero flashover
	400: 400A 630: 630A		P: motor operation	4: 4 poles		18: shunt release+ alarm contact 28: auxiliary contact+ alarm contact 38: undervoltage release + alarm contact 48: shunt release+ alarm contacts + auxiliary contact		C: four protective poles. Null line is broken with other poles.			E2: Current unbalance type controller	250: 250A 320: 320A		C: Plug-in rear-board wiring		Handle lock
	800: 630A 800A 1250: 1250A 1600: 1600A					68: two sets of auxiliary contacts + alarm contact 78: undervoltage release + auxiliary contact + alarm contact		D: four protective poles. Null line is not broken with other poles.			E3: Grounding type controller E3: Grounding type controller	400: 400A 630: 630A 800: 630A 800A 1250: 1250A 1600: 1600A		F: Plug-in front-board wiring		

TGM3G Series Moulded Case Disconnector

1 Overview

TGM3G Series Moulded Case Disconnector is suitable for AC 50Hz circuit with rated insulation voltage 1000V, rated working voltage 400V and below and rated current up to 800A for isolation in the low-voltage power generation, transmission, and power distribution line as obvious break points. It is widely used in many power distribution applications such as new energy, power, steel & iron, metallurgy, building, petrochemical, and rail transport. With its Small volume, anti-vibration, and environmental protection, it is an ideal electrical element in power distribution and transmission.

The disconnector can be perpendicularly installed (and vertically installed), and can be horizontally installed (and laterally installed).

Isolation function symbol:

Standard: IEC 60947-1 and IEC 60947-3

2 Type Designation

TG M 3 G - □ □

- Number of poles
- Frame current (A)
- Disconnector
- Design code
- Moulded case circuit breaker
- Enterprise code

3 Technical Parameters

Basic Informaiton					
Frame current (Ith)		125	250	400	800
Number of poles		3P、4P	3P、4P	3P、4P	3P、4P
Frequency (Hz)		50	50	50	50
Rated working voltage Ue (V)		400	400	400	400
Rated insulation voltage Ui (V)		1000	1000	1000	1000
Rated impulse withstand voltage Uimp (kV)		8	8	12	12
Rated working current Ie (A)		16A, 20A, 25A, 32A, 40A, 50A, 63A, 80A, 100A, 125A	100A, 125A, 140A, 160A, 180A, 200A, 225A, 250A	225A, 250A, 315A, 350A, 400A	630A, 700A, 800A
Rated short-time withstand current Icw (A) / 1s		2000/1	3500/1	5000/1	10000/1
Rated short-circuit breaking capacity Icm (A)		3000	6000	7650	17000
Usage category		AC-22A	AC-22A	AC-22A	AC-22A
Service life(times)	Mechanical	40000	40000	20000	20000
	Electrical	8000	8000	7500	7500
Accessory Information					
Terminals of transition busbar		■ (standard)	■ (standard)	■ (standard)	■ (standard)
Transition terminal		□ (Optional)	□ (Optional)	□ (Optional)	□ (Optional)

TGM3G Series Moulded Case Disconnector

4 Operating Conditions

4.1 Temperature

4.1.1The ambient air temperature does not exceed +40℃, the lower limit is -5℃, and the mean temperature within 24h does not exceed +35℃.

4.1.2In special environment: The lower limit of temperature is not below -25℃, and the upper limit does not exceed +55℃.

4.2 Altitude

4.2.1The altitude at the installation site where the product works normally does not exceed 2,000 meters.

4.2.2If the altitude exceeds 2,000 meters, the altitude coefficient derating is required, or contact our company.

4.3 Humidity

4.3.1The relative air humidity does not exceed 50% at the maximum ambient temperature +40℃, and a higher relative humidity is allowed at a low temperature.

4.3.2The maximum mean relative humidity of the wettest month does not exceed 90%, and the monthly minimum mean temperature of this month does not exceed +25℃.

4.2.3The influence of condensation occurred on the product surface due to temperature changes to the product performance shall be considered.

4.4 Pollution degree:3

4.5 Usage and installation

4.5.1“1”, “3”, “5”, and “N” are incoming terminals and “2”, “4”, “6”, and “N” are outgoing terminals of disconnector; the vertical installation is required rather than reverse installation or reverse wiring connection.

4.5.2The inclination of product installation in each direction does not exceed ±5°.

4.5.3 Main circuit installation category is Class III; the installation category is Class II if not connected to the aux. circuit and control circuit of main circuit

4.5.4 The external magnetic field near the disconnector installation site shall not exceed 5 times earth’s magnetic field in any direction

5 Outline and Installation Dimensions

Model	Number of poles	Outline dimensions (mm)											
		L	L1	L2	L4	L5	W	W1	W2	H	H1	H2	H3
TGM3G-125	3	151.6	253	132.5	8	164	93	30	18	99	65	25	3
	4						122						
TGM3G-250	3	165	300	146.6	12	180	107	35	23.5	100	69	25	4
	4						142						
TGM3G-400	3	257	465	224	13	285	150	48	33	150	99	39	5
	4						198						
TGM3G-800	3	281	490	243	15	303	210	70	45	155	103	40	6
	4						280						

Model	Number of poles	Outline dimensions (mm)											Installation dimensions (mm)		
		H4	H5	H6	H7	A	B	C	D	E	F	G	L3	W3	Φd
TGM3G-125	3	25	3	/	78	96	66	33	32	28	16	30	129	30	Φ4,5
	4													60	
TGM3G-250	3	25	4	4	79	97	67	31	37	33	14	35	125	35	Φ5
	4													70	
TGM3G-400	3	38	2.5	5	114	155	109	46	46	58	20	44	194	44	Φ7
	4											94		94	
TGM3G-800	3	42	6	6	121	175	115	66	72	66	33	70	243	70	Φ7
	4													140	

TGM3G Series Moulded Case Disconnector

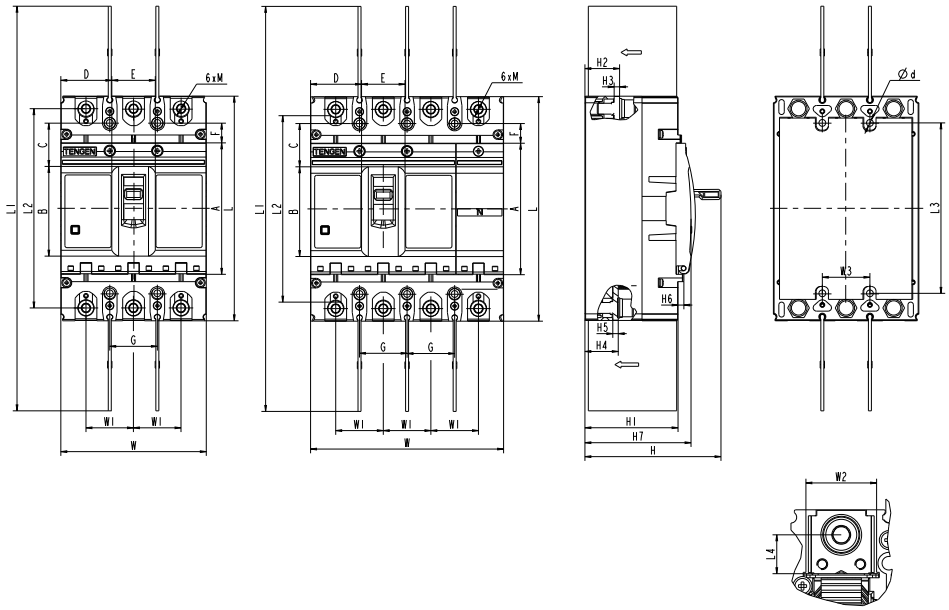

6 Selection of Sectional Area of Connecting Busbar and Cable

Rated current (A)	16 20	25	32	40 50	63	80	100	125 140	160	180 200 225	250	315 350	400
Sectional area of wire (mm^2)	2.5	4	6	10	16	25	35	50	70	95	120	185	240

Rated current (A)	Cable		Copper busbar	
	Sectional area (mm^2)	Qty.	Size	Qty.
500	150	2	30×5	2
600	185	2	40×5	2
700 800	240	2	50×5	2

TGM3G Series Moulded Case Disconnector

7 Operation and With maintenance

7.1 Various features of disconnector are set by the company, and cannot be adjusted without permission during operation.

7.2 Disconnector handle can be in three positions indicated with ON, OFF, Trip states, respectively. When the handle is turned to the Trip position, pull the handle backwards to activate the switch for power-on.

7.3 The manufacturer will be responsible for replacement or repair of circuit breaker free of charge for any damage or abnormal operation due to poor quality within 24 hours from the shipment date under the premise that user complies with the storage and operation conditions and that the product is well sealed.

8 Ordering Notice

Please specify the following items when ordering:

a)Model, name, number of poles of disconnector;

b)Rated current of disconnector;

c)Quantity.

For example: To order TGM3G-250, 3-pole, rated current 225A, 20 pcs.
Please specify: TGM3G-250/3P, 225A, 20 pcs.

TGM3DC Series DC Moulded Case Circuit Breaker

1. Switch body
2. Front-panel wiring transition plate (optional)
3. Short wiring busbar (Standard)
4. Arc isolating sheet (Standard)
5. Shunt release (optional)
6. Alarm contact (optional)
7. Aux. contact (optional)
8. Rotary handle operating mechanism (optional)
9. Motor mechanism (optional)
10. Protective shield (4P standard configuration)

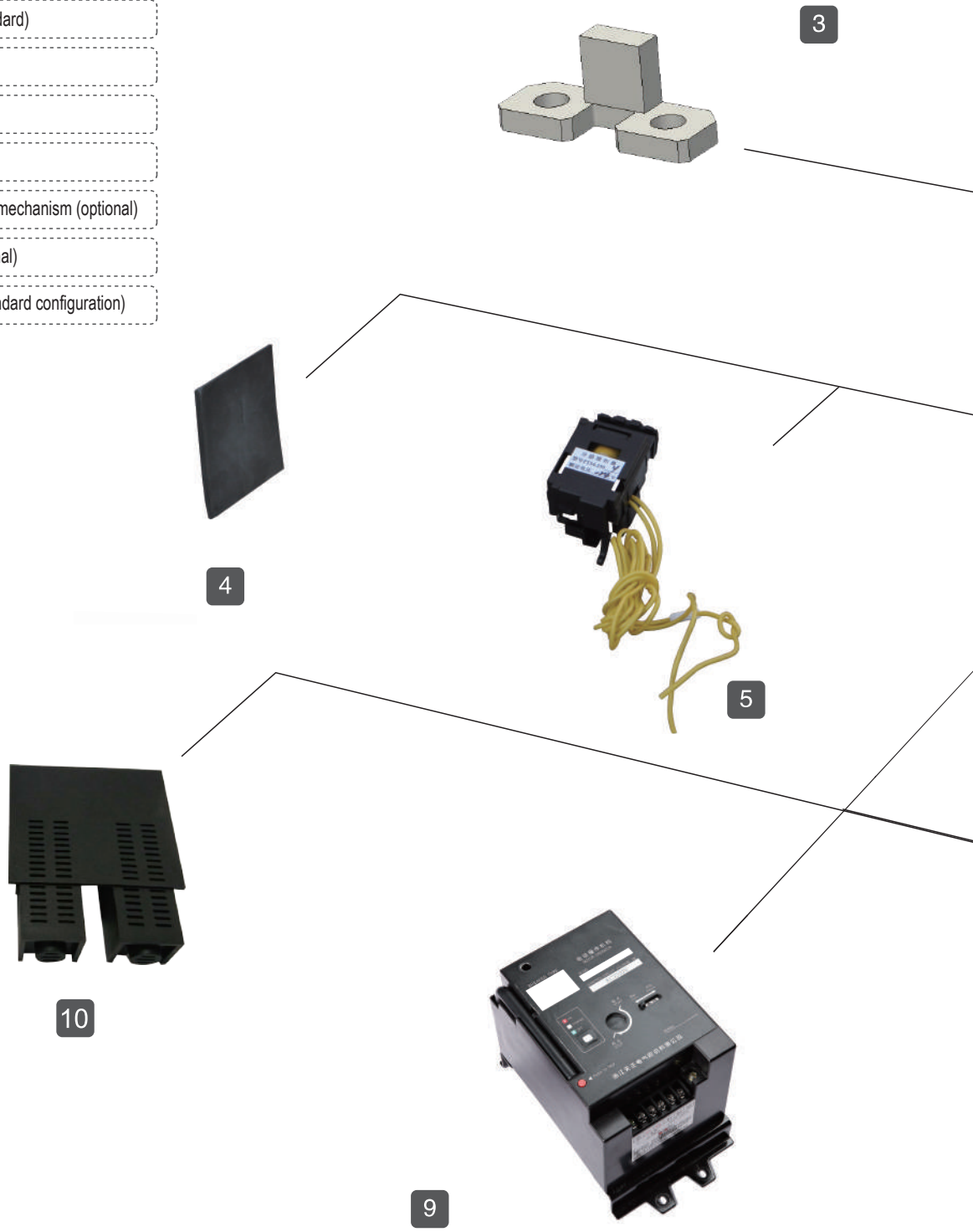

1

2

6

7

8

TGM3DC Series DC Moulded Case Circuit Breaker

1 Overview

TGM3DC Series DC Moulded Case Circuit Breaker (hereinafter referred to as circuit breaker) is one of new circuit breaker researched and developed by our company using international advanced technology, and the product features with high operating voltage, high rated current, box type accessories, safety and reliability, and green environmental protection.

Circuit breakers are divided into M type (Medium breaking type) and H type (High breaking type) according to their rated ultimate short circuit breaking capacity (Icu), suitable for DC non-earthing system, single pole earthing, and center point earthing system. It is an ideal product for the protection of power DC system, communication DC system, and photovoltaic DC system, primarily suitable for DC systems with rated operating voltage of 1000V and below, rated operating current up to 1600A. It is widely used in many fields such as power generation, power transmission and transformation, new energy, communications, and construction. The product can work at 50°C (specified when ordering) normally without derating, and can be used to distribute electrical energy and prevent the lines and power equipment from damage due to overloads or short circuits.

This series of circuit breakers has protection functions such as overload, short circuit and undervoltage protection (with accessories), and can prevent the lines and power supply equipment from damage by overcurrent or undervoltage.

This series of circuit breakers can be installed vertically (i.e. vertical installation) or horizontally (i.e. horizontal installation). The circuit breaker has an isolation function, and its corresponding symbol .

Circuit breakers comply with the following standards:

IEC 60947-1 and IEC 60947-2.

2 Type Designation

TG M 3 DC-□ □ □ / □ □ □ □ □ □

- Accessory voltage
- Rated voltage
- Rated current
- Wiring method: (No code – front-panel wiring)
- Release type and accessory code (see Table 1)
- Number of poles: 2- 2P (3P outline for 400/630/1600);
  3- 3P; 4- 4P
- Operation method code: No code for operation directly via handle
  Motor operation is indicated by "P"
  Operation via rotary handle is indicated by "Z" (for switchgear)
- Short-circuit Breaking capacity level (M - Medium breaking type;
  H - High breaking type)
- Frame rated current
- DC
- Design code
- Moulded case circuit breaker
- Enterprise code

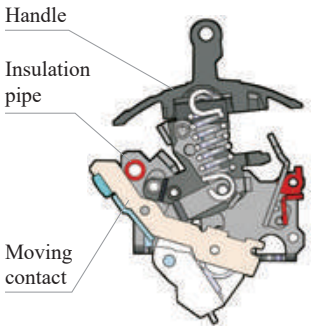

3 Technical Features

3.1 Safe operating mechanism

In order to ensure the absolute safety of the operator, a double-layer insulated handle system is carefully designed:

The first layer of insulation: the handle is injection molded by engineering plastics with high insulation performance, with super high insulation performance;

The second layer of insulation: the metal action mechanism connected to the handle is isolated from the energized conductor inside the circuit breaker through the insulation design.

Through the "double-layer insulated handle system", circuit breakers will be safer than previous versions, and their insulation will remain reliable even if the handle is damaged.

TGM3DC Series DC Moulded Case Circuit Breaker

3.2 Advanced arc extinguishing system

The use of the magnetic blowing principle of magnetic conductive plate and iron core, the arc will enter the arc extinguishing chamber more quickly, thereby greatly improving the arc extinguishing efficiency.

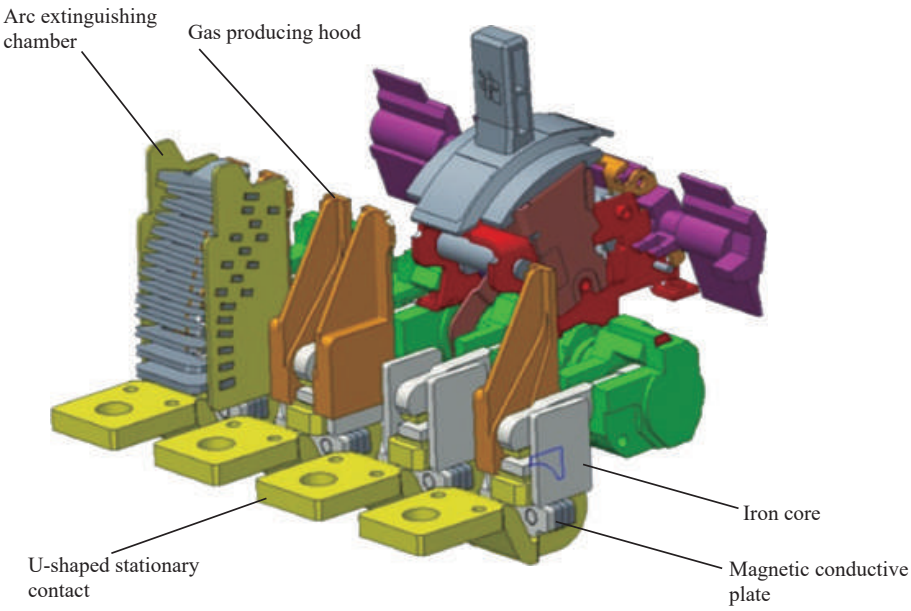

3.3 High product breaking capacity

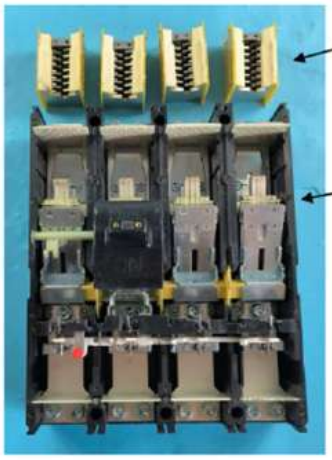

Multi-layer grid staggered arc extinguishing chamber, for better arc cutting and arc extinguishing

Contacts are divided into arc contacts and main contacts; arc contacts can be better introduced into the arc extinguishing chamber

The contacts have double silver points of arc contacts and main contact

3.4 High rated current and excellent performance

In the industry, very few enterprise's DC moulded case products have the rated current up to 1600A, but our company's circuit breaker can carry 1600A. The circuit breaker can adopt a contact system with multiple contact knives and is made of sufficient high-quality copper material with excellent product performance.

TGM3DC Series DC Moulded Case Circuit Breaker

4 Technical Parameters

4.1 Technical parameters see Table 1

Table 1

Basic Information									
Frame rated current		125A		250A		400A		630A	
Number of poles		2P / 4P				2P (3-pole outline) / 4P			
Rated operating voltage Ue (V)		2P: DC250 / 500V 4P: 750 / 1000V							
Rated insulation voltage Ui (V)		1000							
Rated impulse withstand voltage (kV)		8				12			
Rated operating current In (A)		16A, 20A, 25A, 32A, 40A, 50A, 63A, 80A, 100A, 125A		100A, 125A, 140A, 160A, 180A, 200A, 225A, 250A		225A, 250A, 315A, 350A, 400A		400A, 500A, 600A, 630A	
Breaking capacity		M	H	M	H	M	H	M	H
Rated ultimate short circuit breaking capacityIcu (kA)	DC=250V	35	50	35	50	50	65	50	65
	DC=500V	25	40	25	40	35	50	35	50
	DC=750V	20	40	20	40	25	40	25	40
	DC=1000V	20	40	20	40	20	40	25	40
Ics / Icu		100%							
Isolation function		Available							
Usage category		A							
Flashover distance (mm)		Upper and lower flashover distance ≤ 50				Upper and lower flashover distance ≤ 100			
Service life	Mechanical	20,000 times		10,000 times		5,000 times		5,000 times	
	Electrical	8,000 times		5,000 times		1,000 times		1,000 times	
Accessory information									
Operation directly via handle		■ (Standard)		■ (Standard)		■ (Standard)		■ (Standard)	
Fixed type front-panel		■ (Standard)		■ (Standard)		■ (Standard)		■ (Standard)	
Protective shield		■ (Standard)		■ (Standard)		■ (Standard)		■ (Standard)	
Motor mechanism		□ (Optional)		□ (Optional)		□ (Optional)		□ (Optional)	
Shunt release		□ (Optional)		□ (Optional)		□ (Optional)		□ (Optional)	
Extended rotary handle		□ (Optional)		□ (Optional)		□ (Optional)		□ (Optional)	
Aux. contact		□ (Optional)		□ (Optional)		□ (Optional)		□ (Optional)	
Alarm contact		□ (Optional)		□ (Optional)		□ (Optional)		□ (Optional)	

TGM3DC Series DC Moulded Case Circuit Breaker

Table 1, continued

Basic Information					
Frame rated current		800A		1440A	1600A
Number of poles		2P (3-pole outline)/4P		2P (4-pole outline)	2P (3-pole outline) / 3P / 4P
Rated operating voltage Ue (V)		2P: DC250 / 500V 4P: 750 / 1000V			DC500V / DC750V / DC1000V
Rated insulation voltage Ui (V)		1000		1000	1000
Rated impulse withstand voltage Uimp (kV)		12		12	12
Rated operating current In (A)		630A, 700A, 800A		1000A, 1250A, 1440A	800A, 1000A, 1250A, 1440A, 1500A, 1600A
Breaking capacity level		M	H	H	M
Rated ultimate short circuit breaking capacity Icu (kA)	DC=250V	50	65	/	/
	DC=500V	35	50	30	50
	DC=750V	25	40	/	50
	DC=1000V	25	40	/	30
Ics / Icu		100%			
Isolation function		Available			
Usage category		A			
Flashover distance (mm)		Upper and lower flashover distance ≤100			
Service life	Mechanical	5,000 times			
	Electrical	1,000 times			
Accessory information					
Operation directly via handle		■ (Standard)		■ (Standard)	■ (Standard)
Fixed type front-panel		■ (Standard)		■ (Standard)	■ (Standard)
Protective shield		■ (Standard)		■ (Standard)	■ (Standard)
Motor mechanism		□ (Optional)		□ (Optional)	□ (Optional)
Shunt release		□ (Optional)		□ (Optional)	□ (Optional)
Extended rotary handle		□ (Optional)		□ (Optional)	/
Aux. contact		□ (Optional)		□ (Optional)	□ (Optional)
Alarm contact		□ (Optional)		□ (Optional)	□ (Optional)

4.2 Reverse time limit of circuit breaker sees Table 2

Table 2

Test current name	Multiple of setting current	Appointed time		Initial state
		In ≤ 63A	In > 63A	
Appoint non-trip current	**1.05 In**	**≥ 1h**	**≥ 2h**	**Cold state**
Appoint trip current	**1.30 In**	**< 1h**	**< 2h**	**Hot state**

Note: The hot state refers to the state of the appoint trip current when the specified appointed time expires.

TGM3DC Series DC Moulded Case Circuit Breaker

5 Normal Working Conditions and Installation Conditions

5.1 Temperature

5.1.1 The ambient air temperature shall not exceed +50°C, the lower limit is -5°C, and the mean temperature value shall not exceed +35°C within 24 hours.

5.1.2 In special environment: The lower limit of temperature shall not be below -25°C, and the upper limit shall not exceed +70°C.

5.1.3 If the product is used in an environment above +50°C or below -25°C, the derating based on the temperature compensation factor is required or contact our company.

5.2 Altitude

5.2.1 The altitude of the installation site where the product is used normally does not exceed 2000m.

5.2.2 If the altitude exceeds 2000m, the derating based on the temperature compensation factor is required or contact our company.

5.3 Humidity

5.3.1 The relative humidity of the atmosphere does not exceed 50% at the maximum temperature of +50°C, and a higher relative humidity at lower temperatures is allowed.

5.3.2 The mean maximum relative humidity of the wettest month does not exceed 90%, and the monthly mean minimum temperature of this month does not exceed +25°C.

5.3.3 It is considered that condensation occurred on the surface of the product due to temperature changes may affect the performance of the product.

6 Circuit Breaker Protection Characteristics Curve

TGM3DC-125(M/H) Time / Current Characteristics Curve Diagram

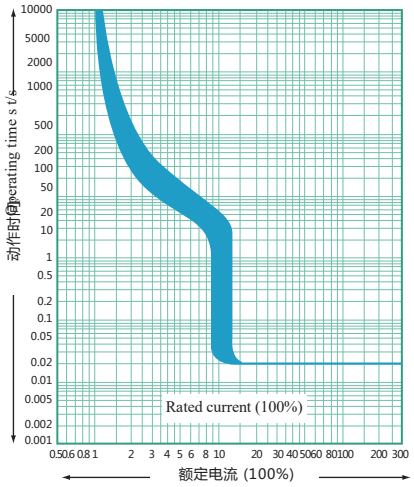

TGM3DC Series DC Moulded Case Circuit Breaker

TGM3DC-250(M/H) Time / Current Characteristics Curve Diagram

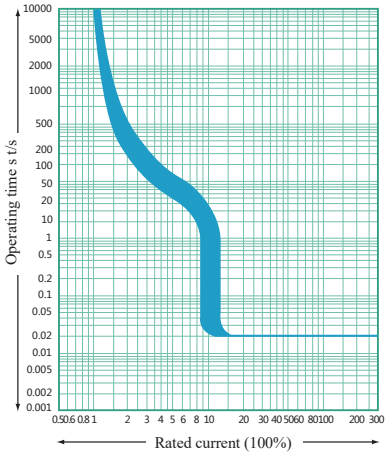

TGM3DC-400(M/H) Time / Current Characteristics Curve Diagram

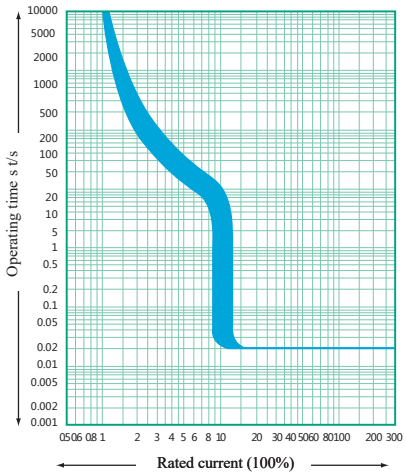

TGM3DC-630(M/H) Time / Current Characteristics Curve Diagram

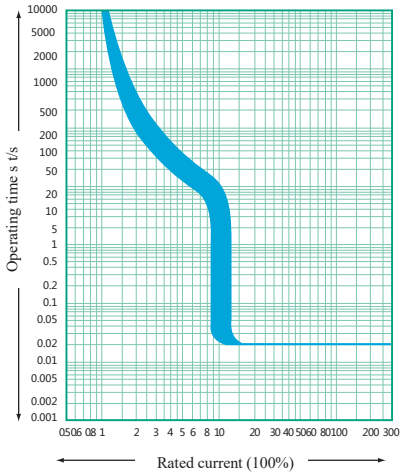

TGM3DC Series DC Moulded Case Circuit Breaker

7 Circuit Breaker Wiring Method in the DC system Application and DC System

7.1 Application in the DC system

The following items are primarily considered when selecting circuit breaker in the DC system:

Rated operating voltage, considering the number of breaking poles connected in series

Rated current, considering the load power

Breaking capacity, considering the maximum short circuit current at installation site

Earthing system method

System type		Earth system		Non-earth system
		Load earthed	Center point earthed	
Various fault types		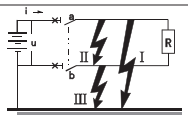	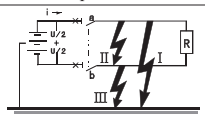	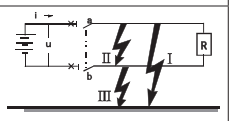
Fault influence	Fault I	Produce maximum short circuit current The contact connected to the positive pole of power supply opens	U/2 voltage produces the current close to maximum short circuit current The contact connected to the positive pole of power supply opens	No influence
	Fault II	Produce maximum short circuit current Contacts connected in series all involve breaking operation	Produce maximum short circuit current Contacts connected in series all involve breaking operation	Produce maximum short circuit current Contacts connected in series all involve breaking operation
	Fault III	No influence	Same with fault I, only for contact connected to the negative pole of power supply	No influence
Most serious situation		Fault I	Fault I and fault III	Fault II
Breaking pole situation		For fault I, only 1 pole executes the breaking operation; for fault II, two poles jointly execute the breaking operation.	For each pole, execute the maximum short circuit current when U/2	Two poles jointly execute the breaking operation.

7.2 Wiring method of circuit breaker in the different DC system under different voltage

The following wiring methods of TGM3DC are available for selection by user, and the typical solutions are as follows: 2-pole 2P outline adopts E type wiring method, 2-pole 3P outline adopts F type wiring method, and 4-pole adopts G1, H1, and I type wiring method. Refer to the TGM3DC Outline Dimensions and Installation Dimensions, and other wiring methods have the same outline and installation dimensions.

Our company routinely recommends to use E, F, G1, H1, and I type wiring method. If other wiring method is required by client, please contact our company.

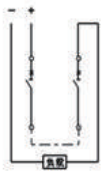

E type

F type

H1 type

G1 type

I type

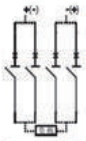

Only for 1440 frame

Table 3

Rated operating voltage	Power / Load wiring method		
	Earth insulation system	Negative pole earthing system	Center point earthing system
DC250V	F	E，F	F
DC500V	F	E	F
DC750V	G1，H1	G1，I	H1
DC1000V	G1，H1	I	H1

Notes:
1. For negative pole earthing system, the wiring listed in the above take is available;
2. For earth insulation and center point earthing system, the wiring method listed in the above table is recommended; the positive and negative poles can be exchanged according to the actual situations, and the locations of power supply and load can be exchanged.

TGM3DC Series DC Moulded Case Circuit Breaker

8 Correction Coefficient of Circuit Breaker in Special Environment

8.1 Derating coefficient due to ambient temperature changes see Table 4

Table 4

Ambient temperature / Coefficient / Product model	+40°C	+50°C	+60°C	+70°C
	Derating coefficient			
TGM3DC-125	1In	1In	0.93In	0.85In
TGM3DC-250	1In	1In	0.93In	0.85In
TGM3DC-400	1In	1In	0.94In	0.85In
TGM3DC-630	1In	1In	0.9In	0.8In
TGM3DC-1440	1In	1In	0.9In	0.8In
TGM3DC-1600	1In	0.94In	0.83In	0.75In

8.1 Influence on circuit breaker features due to altitude changes see Table 5

If the altitude exceeds 2000m, the electrical performance of circuit breaker can be corrected according to the table below.

Table 5

TGM3DC-125~1440 DC Moulded Case Circuit Breaker High Altitude Coefficient Correction Table				
Altitude	2000m	3000m	4000m	5000m
Power frequency withstand voltage Uimp	1	0.89	0.8	0.73
Max. operating voltage Ue	1	0.83	0.71	0.63
Rated operating current In	1	0.97	0.93	0.89
TGM3DC-1600 DC Moulded Case Circuit Breaker High Altitude Coefficient Correction Table				
Altitude	2000m	3000m	4000m	5000m
Power frequency withstand voltage Uimp	1	0.9	0.77	0.63
Max. operating voltage Ue	1	0.9	0.8	0.7
Rated operating current In	1	0.98	0.95	0.92

9 Accessories

Internal accessories

According to the user needs, the circuit breaker accessories can be led out directly through the lead wire (the length of wire is 50cm, and special requirements shall be specified when ordering), or the wiring terminal block (the wiring terminal block is specified when ordering if required) is provided.

• Shunt release (left installation)

Rated control circuit power voltage (Us)	AC: AC220/230V, AC380/400V DC: DC24V, DC110V, DC220V
Operating voltage	(0.7~1.1) Us
Wiring diagram: 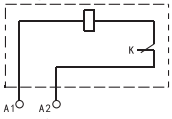 Power input	Note: K – The micro switch connected to the coil in series in the shunt release is a normally-closed contact; when the circuit breaker is closed, this contact will open automatically, and will be closed when closing.

DC24V shunt release can work reliably when the line operating current reaches 5A±0.5A.

TGM3DC Series DC Moulded Case Circuit Breaker

• Aux. contact (left and right installation)

Table 6

Frame rated current	Inm ≤ 250A		Inm ≥ 400A	
Resistive current Ith	3A		6A	
Usage catagory	AC-15	DC-13	AC-15	DC-13
Operating voltage	AC380V/400V	DC220V/230V	AC380V/400V	DC220V/230V
Rated operating current Ie	0.3A	0.15A	1A	0.15A

Wiring diagram

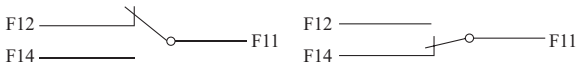

State when the circuit breaker is in the “OFF” position

State when the circuit breaker is in the “ON” position

• Alarm contact (left and right installation)

Resistive current Ith	3A
Rated operating current Ie	Same with aux. contact

Wiring diagram

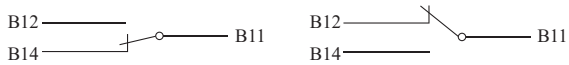

State when the circuit breaker is in the “free trip (alarm)” position

State when the circuit breaker is in the “OFF” and “ON” position

• Manual mechanism:

The outline and installation dimension diagram of rotary handle is shown below:

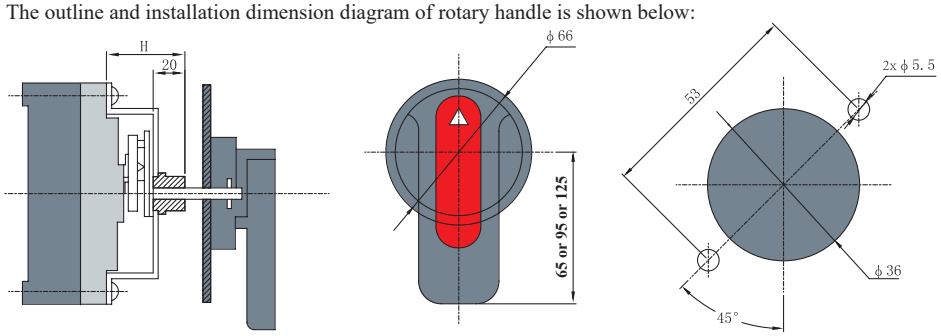

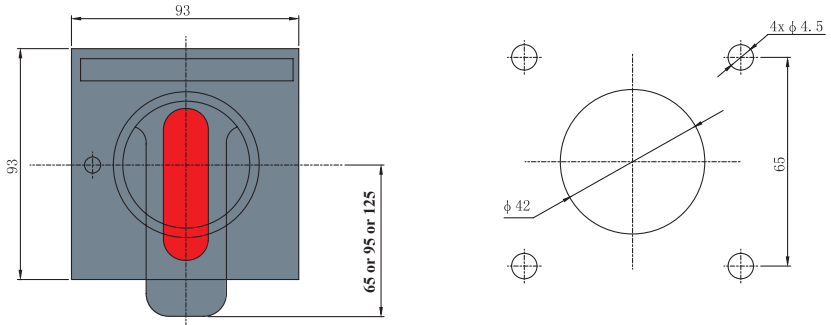

Outline and hole dimensions of rotary handle

Table 7

Model & Spec.	TGM3DC-125	TGM3DC-250	TGM3DC-400	TGM3DC-630	TGM3DC-800	TGM3DC-1440
Installation dimensions (H)	61	59	87	92	92	92

TGM3DC Series DC Moulded Case Circuit Breaker

External accessories of product

● Motor mechanism:

This accessory is installed on the panel of circuit breaker to realize the remote and electric operation of the closing, opening and re-tripping of circuit breaker, suitable for automation control application. The outline dimensions of motor mechanism see Table 8.

Input voltage	AC220/230V, AC380/400V
Wiring diagram	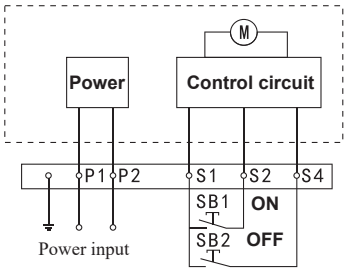 Remarks: P1 and P2 are external power input SB1 and SB2 are operating buttons (provided by user) Note: Those in the dashed box are the wiring diagrams of internal accessories of motor mechanism.

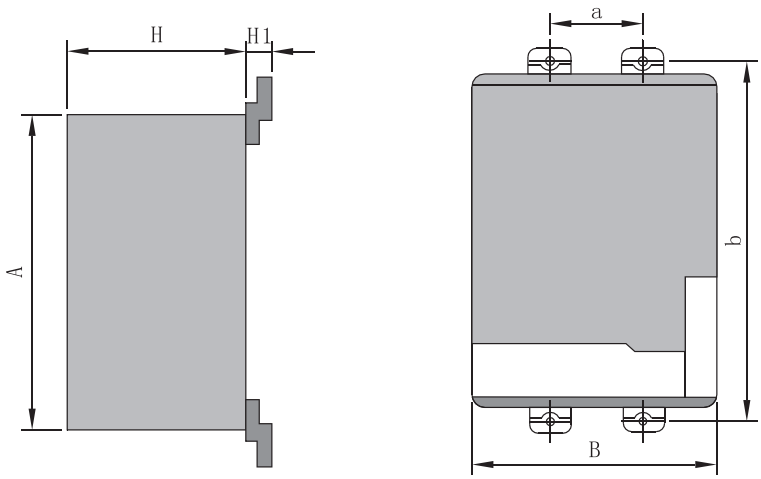

Table 8

Model	A	B	H	H1	a	b
TGM3DC-125	116	90	77	22	30	129
TGM3DC-250	116	90	77	17	35	126
TGM3DC-400	176	130	115	24	44	194
TGM3DC-630/800/1440	176	130	115	27	70	243
TGM3DC-1600	174	210	75	/	/	/

TGM3DC Series DC Moulded Case Circuit Breaker

Release and accessory codes

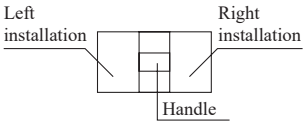

Alarm contact ●
Shunt release ■
Aux. contact ○

Table 9

	Accessory code		Accessory installation and lead-wire mode					
Accessory name	Electromagnetic release	Combined release	TGM3DC-125 (No right accessories for 2-pole product)		TGM3DC-250 (No right accessories for 2-pole product)		TGM3DC-400 TGM3DC-630/800	
No accessories	200	300						
Alarm contact	208	308						/
Shunt release	210	310						
Aux. contact	220	320						
Shunt release Aux. release	240	340						/
Two sets of aux. contact	260	360						
Shunt release Alarm contact	218	318					/	/
Aux. contact Alarm contact	228	328						/
Shunt release Aux. contact Alarm contact	248	348					/	/
Two sets of aux. contacts Alarm contact	268	368						/

TGM3DC Series DC Moulded Case Circuit Breaker

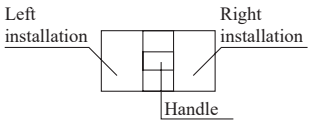

Alarm contact ●
Shunt release ■
Aux. contact ○
Undervoltage release ▲

Table 9, continued

Accessory name	Accessory code	TGM3DC-1600	Picture
No accessory	00		Shunt release
Alarm contact	08	●	
Shunt release	10	■	
Aux. contact	20	○	
Undervoltage release	30	▲	Undervoltage release
Shunt release Aux. release	40	■ ○	
Undervoltage release Shunt release	50	▲ ■	
Two sets of aux. contacts	60	○ ○	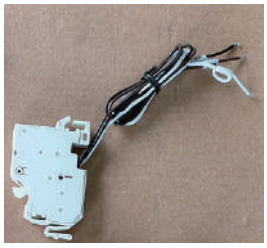 Alarm contact
Undervoltage release Aux. contact	70	▲ ○	
Shunt release Alarm contact	18	● ■	
Aux. contact Alarm contact	28	● ○	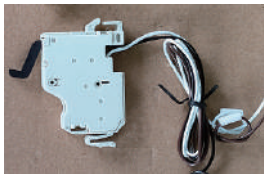 Aux. contact
Undervoltage release Alarm contact	38	● ▲	
Shunt release Aux. contact Alarm contact	48	● ○ ■	
Two sets of aux. contacts Alarm contact	68	● ○ ○	
Undervoltage release Aux. contact Alarm contact	78	● ○ ▲	

Note: TGM3DC-1600 alarm contact is only installed on the left side.

TGM3DC Series DC Moulded Case Circuit Breaker

10 Outline and Installation Dimensions of Circuit Breaker

The outline and installation dimensions of circuit breaker see Fig. 1, Fig. 2, Fig. 3, Table 10, and Table 11

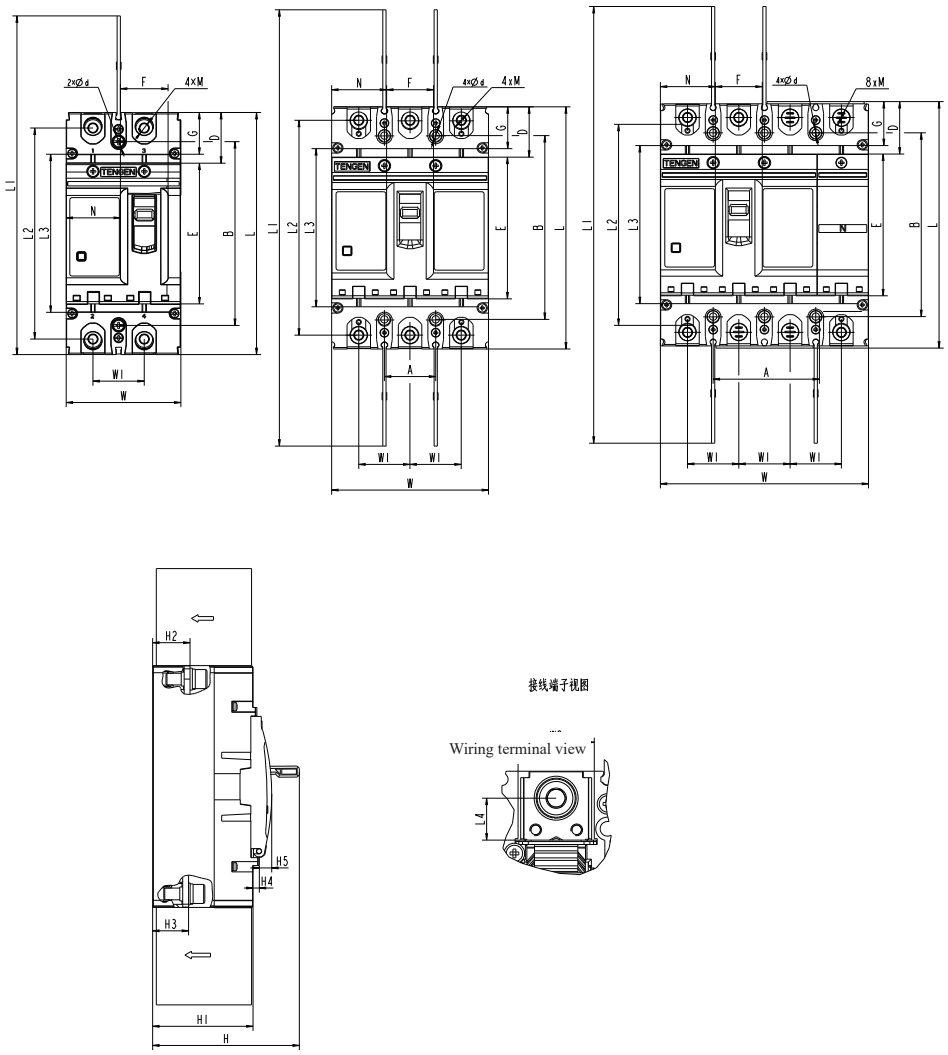

Fig. 1 TGM3DC-125~800 outline and installation dimensions

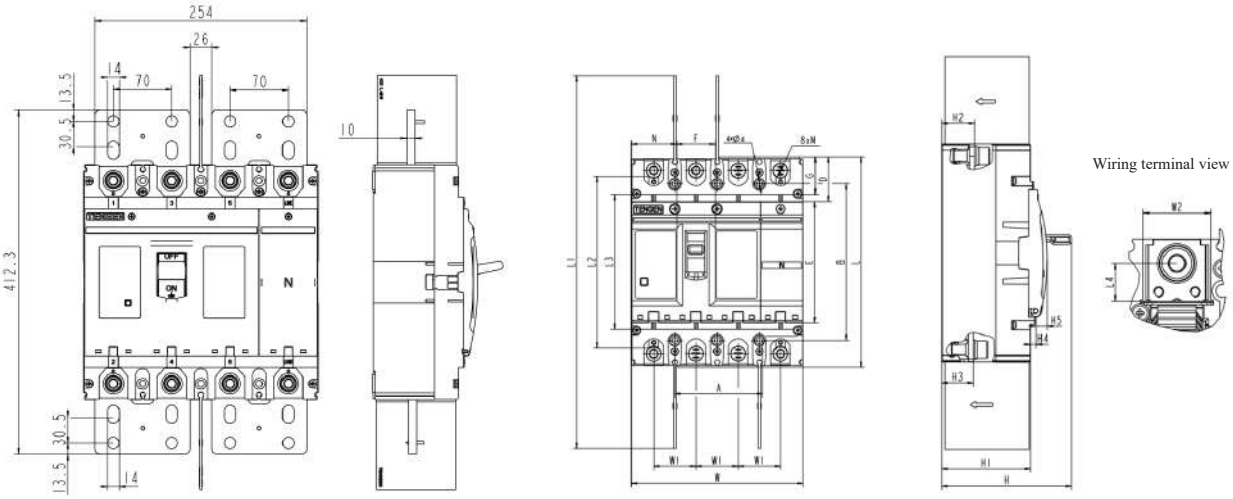

Fig. 2 TGM3DC-1440 outline and installation dimensions

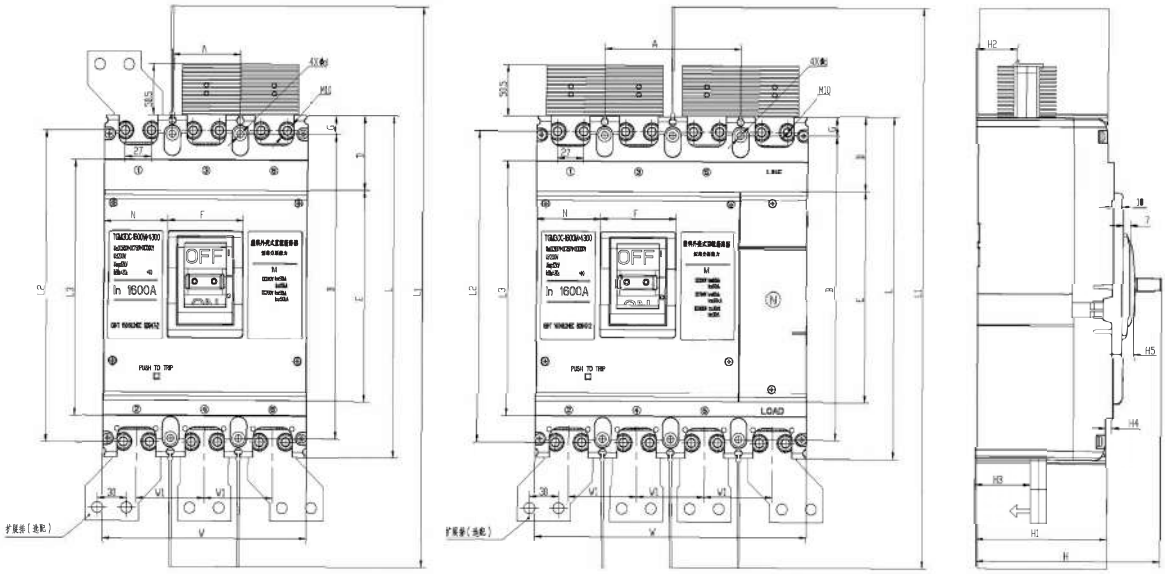

Fig. 3 TGM3DC-1600 outline and installation dimensions

TGM3DC Series DC Moulded Case Circuit Breaker

Outline dimensions of circuit breaker and size of hole on panel

Table 10

Product spec.	Number of poles	Outline dimensions (mm)					Size of hole on panel (mm)							
		W	L	L1	H	H1	N	F	G	D	E	L3	H4	H5
TGM3DC-125	2P	63	153	209	116	82	/	28	/	28	96	/	/	18
	4P	123	154	253			32							
TGM3DC-250	2P	78	165	232	116	85	37	33	29	35	96	108	3.5	10
	4P	142	169	300										
TGM3DC-400	2P	150	257	465	150	100	46	58	41	51	155	175	5	14
	4P	198	261	465										
TGM3DC-630/800	2P	212	281	496	155	103	74	66	39		175	204	8	16
	4P	282	284	496										
TGM3DC-1440	2P	282	281	496	155	103	74	66	39		175	204	8	16
TGM3DC-1600	2P	210	340	555	159	135	66	78	18.5	74	210	255	6	13
	3P	210												
	4P	280												

H is the height size of product; H is 195mm for 1600 frame product excluding handle sleeve, and is 239 mm including handle sleeve.

Wiring dimensions and installation dimensions of circuit breaker

Table 11

Product spec.	Number of poles	Outline dimensions (mm)							Size of hole on panel (mm)		
		H2	H3	W1	W2	L2	L4	M	A	B	Φd
TGM3DC-125	2P	28	/	30	18	132	8	M8	/	129	5
	4P		28						60		
TGM3DC-250	2P	22	/	35	23,5	146	12	M8	/	126	5
	4P		23,5						70		
TGM3DC-400	2P	40,1	38	49	33	224	13	M10	44	194	8
	4P								94		
TGM3DC-630/800	2P	41	42	70	45	243	15	M12	70	243	7
	4P								140		
TGM3DC-1440	2P	41	42	70	45	243	15	M12	140	243	7
TGM3DC-1600	2P	41,5	57	70	51,6	310	15,4	M10	70	303	7
	3P										
	4P								140		

11 Ordering Notice

Please specify the following items when ordering:

a) Model, name, and number of poles of circuit breaker.

b) Rated current and rated voltage of circuit breaker.

c) Accessory name, specification, wiring method code of circuit breaker; if shunt release is used, please specify the operating voltage (or control power voltage) value.

d) Qty.

For example: To order TGM3DC-125M, 4-pole circuit breaker, combined release, rated current 100A, rated voltage 750V, shunt release accessory voltage DC220V, wiring method H1, 20 units.

Please specify: TGM3DC-125M/4310 100A 750V DC220, H1, 20 units.

For special requirements of circuit breaker, please contact the manufacturer.

12 Example of Quick Selection

TGM3DC-125M/2310 80A DC500V AC220V:

Order one TGM3DC series 125 frame moulded case DC circuit breaker for protection, with a higher breaking M type, rated current 80A, rated operating voltage DC500V, 2-pole combined release, with shunt release, control power voltage AC220V.

TGM3DC-250HP/4300 200A DC1000V AC380V:

Order one TGM3DC series 250 frame moulded case DC circuit breaker for protection, with rated current 200A, rated operating voltage DC1000V, 4-pole combined release and motor mechanism, control power voltage AC380V.

Note: To customize the special product, please contact our company for consultation.

TGM3DC Series DC Moulded Case Circuit Breaker

13 Product Selection Table

TGM3DC	–	125	M	Z	/	4	3	10	125A	DC250V	AC230V	B	Plateau	Other	H1
Product model		Frame current	Breaking capacity	Operation method		Number of poles	Trip mode	Internal accessory	Rated current	Rated operating voltage	Accessory operating voltage	Installation method	Application	Special requirements	Wiring type code
TGM3DC moulded case DC circuit breaker		125: 125A 250: 250A	M: Higher breaking capacity	Default: Direct operation		2-pole	2: Short circuit protection	00: No accessory 10: Shunt release 20: Aux. contact 30: Undervoltage release	16A …… 1600A	DC250V DC500V DC750V DC1000V	AC380/400V AC220/230V DC220V DC110V DC24V	Default: Fixed type front-panel	Default; General application	Default: Flashover	E, F, H1, G1, and I type wiring method (refer to the wiring diagram)
		400: 400A 630: 630A	H: High breaking capacity	Z: Operation via rotary handle		4-pole	3: Overload + Short circuit	40: Shunt + Aux. 50: Shunt + Undervoltage 60: Two sets of aux. contacts			Multiple accessory voltages shall be described separately	B: Fixed type back-panel	Plateau Moist heat Environmental protection Salt mist Low heat	Phase partition	
		800: 800A 1440: 1440A		P: Electric operation				70: Undervoltage + Aux. 08: Alarm contact 18: Shunt + Alarm 28: Aux. + Alarm						Handle lock	
		1600: 1600A						38: Undervoltage + Alarm 48: Shunt + Alarm + Aux.							
								68: Two sets of aux. + Alarm 78: Undervoltage + Aux. + Alarm							

TGM5 Series Moulded Case Circuit Breaker

1 Overview

TGM5 Series Moulded Case Circuit Breaker (hereinafter referred to as circuit breaker) is one of the new circuit breakers developed by our company based on the international advanced double breakpoint platform, and has the characteristics of no derating for reverse incoming wire, zero arc, high breaking capacity, box accessories, Small volume and compact, and green environmental protection.

Circuit breakers are divided into C-type, L-type, M-type, H-type, and S-type according to their rated ultimate short-circuit breaking capacity (ICU), and it is an ideal product for power distribution and motor protection. With the rated insulation voltage of 1250V, it is used in the AC 50/60Hz circuit with the rated operating voltage 690V and below and with the rated current from 125A to 630A for infrequent conversion of the line and infrequent start of the motor.

This series of circuit breakers has overload, short circuit, and undervoltage protection devices to protect the line and power equipment to prevent damage in the event of overcurrent or undervoltage. This series of circuit breakers can be installed vertically (that is, longitudinal installation) or horizontally (that is, lateral installation).

With isolation function, its corresponding symbol is as follows: .

Circuit breakers comply with the following standard: IEC 60947-1, IEC 60947-2

2 Type Designation

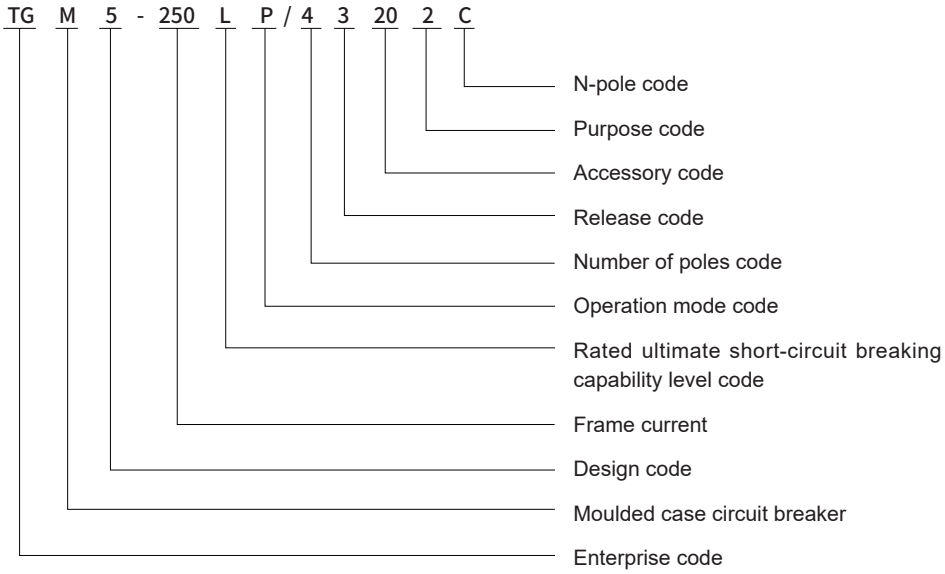

Notes: 1) Breaking grade code: the breaking grade is divided into C type, L type, M type, H type, and S type;
2) Operation mode code: No code: operation via handle; P: Electric operation, Z: Rotary handle
3) Pole number code: 3:3P (three-pole); 3N: 3P+N (three-pole four-wire); 4:4P (four-pole);
4) 2: Electromagnetic release; 3: Thermal magnetic release;
5) Accessory code: (See Accessory Code)
6) Purpose code: Power distribution protection: No; Motor protection: 2
7) N-pole type (only for 4-pole circuit breaker), other poles: no code (see Table 1)

Table 1

Wiring method		
A type	N pole is not equipped with an overcurrent trip component, N pole is always on, and is not open and closed together with other three poles simultaneously	3N300A
B type	N pole is not equipped with an overcurrent trip component, N pole is open and closed together with other three poles simultaneously (N pole is first closed and then open)	4300B
C type	N pole is equipped with an overcurrent trip component, N pole is open and closed together with other three poles simultaneously (N pole is first closed and then open)	4300C
D type	N pole is equipped with an overcurrent trip component, N pole is always on, and is not open and closed together with other three poles simultaneously	3N300D

TGM5 Series Moulded Case Circuit Breaker

3 Technical Parameters

Table 2

Model			TGM5-250				
Frame current Inm (A)			250				
Number of poles			3P, 3P+N, 4P				
Rated operating voltage Ue (V)			AC380/400/415, AC500/550, AC660/690				
Rated insulation voltage Ui (V)			1250				
Rated withstand impulse voltage Uimp (kV)			8				
Rated frequency Hz			50/60				
Rated current In (A)			125, 160, 180, 200, 225, 250				
Breaking capacity			C	L	M	H	S
Icu (kA)	AC380/400/415V		36	50	85	100	150
	AC500/550V		25	50	50	70	70
	AC660/690V		8	10	10	15	20
Ics (%Icu) (kA)	AC380/400/415V		100%				
	AC500/550V		100%				
	AC660/690V		100%				
Isolation function			Available for 3P, 4P				
Use category			A				
Operation performance (times)	Mechanical life		20000				
	Electrical life	AC380/400/415V	10000				
		AC500/550V	5000				
		AC660/690V	4000				
Flashover distance (mm)			0				
Accessory information							
Operation directly via handle			■ Standard				
Extended rotary handle			□ Optionial				
Motor mechanism			□ Optionial				
Fixed type front-panel			■ Standard				
Plug-in type front-panel			□ Optionial				
Drawert type			□ Optionial				
Transition busbar			- No				
Phase partition			□ Optionial				
Terminal cover			■ Standard				
Outline dimensions: L×W×H (mm)							
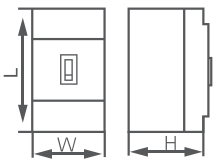		3P	161×105×90				
		4P	161×140×90				

TGM5 Series Moulded Case Circuit Breaker

Table 2, continued

Model			TGM5-400					TGM5-630				
Frame current Inm (A)			400					630				
Number of poles			3P, 3P+N, 4P					3P, 3P+N, 4P				
Rated operating voltage Ue (V)			AC380/400/415, AC500/550, AC660/690					AC380/400/415, AC500/550, AC660/690				
Rated insulation voltage Ui (V)			1250					1250				
Rated withstand impulse voltage Uimp (kV)			12					12				
Rated frequency Hz			50/60					50/60				
Rated current In (A)			250、315、350、400					400、500、630				
Breaking capacity			C	L	M	H	S	C	L	M	H	S
Icu (kA)	AC380/400/415V		36	50	85	100	150	36	50	85	100	150
	AC500/550V		25	50	50	70	70	25	50	50	70	70
	AC660/690V		10	10	20	25	35	10	10	20	25	35
Ics (%Icu) (kA)	AC380/400/415V		100%					100%				
	AC500/550V		100%					100%				
	AC660/690V		100%					100%				
Isolation function			Available for 3P, 4P					Available for 3P, 4P				
Use category			A					A				
Operation performance (times)	Mechanical life		15000					15000				
	Electrical life	AC380/400/415V	7500					7500				
		AC500/550V	5000					3500				
		AC660/690V	3000					2000				
Flashover distance (mm)			0					0				
Accessory information												
Operation directly via handle			■ Standard					■ Standard				
Extended rotary handle			□ Optionial					□ Optionial				
Motor mechanism			□ Optionial					□ Optionial				
Fixed type front-panel			■ Standard					■ Standard				
Plug-in type front-panel			□ Optionial					□ Optionial				
Plug-in type back-panel			□ Optionial					□ Optionial				
Drawer type			□ Optionial					□ Optionial				
Transition busbar			□ Optionial					□ Optionial				
Phase partition			■ Standard					■ Standard				
Outline dimensions: L×W×H（mm）												
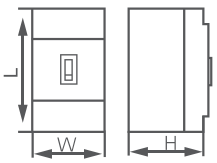		3P	255×140×116					255×140×116				
		4P	255×185×116					255×185×116				

TGM5 Series Moulded Case Circuit Breaker

4 Release Type and Accessory Code

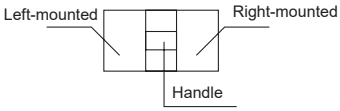

Alarm contact ● Aux. contact ○

Shunt release ■ Undervoltage release ▲

Table 3

Accessory name	Accessory code	Accessory installation and wire lead-out method	
		TGM5-250	TGM5-400/630
		3P, 4P	3P, 4P
No accessory	00		
Alarm contact	08		
Shunt release	10		
Undervoltage release	30		
Aux. contact	20		
Dual aux. conacts	21		
Three aux. contacts	22	——	
Four aux. contacts	23	——	
Alarm contact + Shunt release	18		
Alarm contact + Undervoltage release	38		
Alarm contact + Aux. colntact	28		
Alarm contact + Dual aux. conacts	68		
Alarm contact + Three aux. contacts	67	——	
Alarm contact + Four aux. contacts	66	——	
Shunt release + Aux. contact	40		
Shunt release + Dual aux. conacts	41		
Shunt release + Three aux. contacts	42	——	
Shunt release + Four aux. contacts	43	——	
Undervoltage release + aux. contact	70		
Undervoltage release + dual aux. contact	71		
Undervoltage release + three aux. contact	72	——	
Undervoltage release + four aux. contact	73	——	
Alarm contact + shunt release + aux. contact	48		
Alarm contact + shunt release + dual aux. contact	47		
Alarm contact + shunt release + three aux. contact	46	——	
Alarm contact + shunt release + four aux. contact	45	——	
Alarm contact + undervoltage release + aux. contact	78		
Alarm contact + undervoltage release + dual aux. contact	77		
Alarm contact + undervoltage t release + three aux. contact	76	——	
Alarm contact + undervoltage release + four aux. contact	75	——	

TGM5 Series Moulded Case Circuit Breaker

5 Trip Characteristic Curve

5.1 TGM5-250/400/630(125A-630A)TM Thermal magnetic release (Ambient air temperature +40°C)

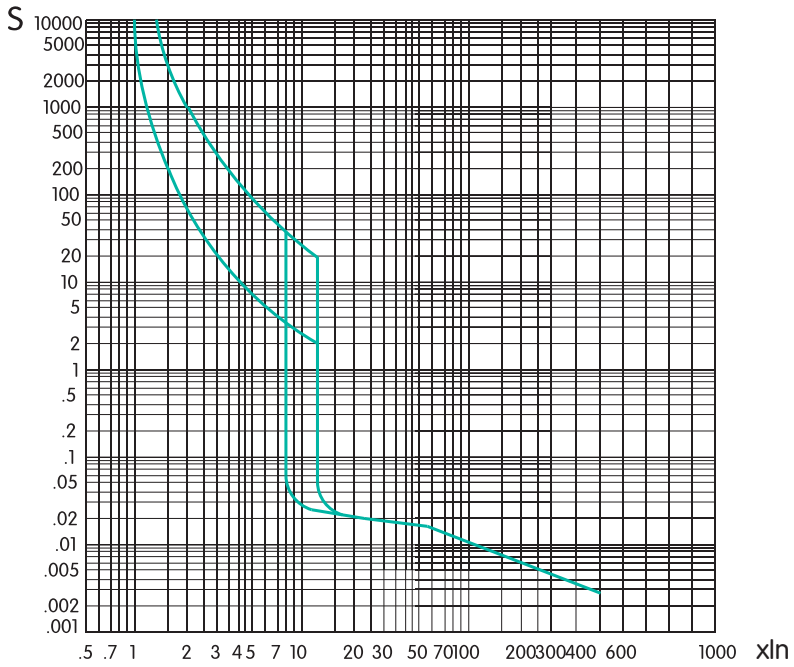

6 Circuit Breaker Installation Safety Distance and Minimum Distance

6.1 Safety Distance

Minimum distance between two adjacent circuit breakers

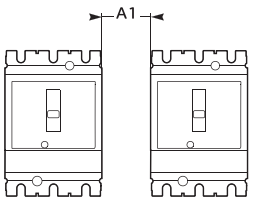

Minimum distance between the circuit breaker and the front panel or rear panel

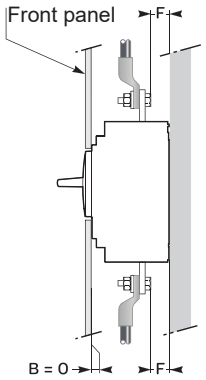

TGM5 Series Moulded Case Circuit Breaker

Minimum distance between the circuit breaker and the top, bottom or side plate

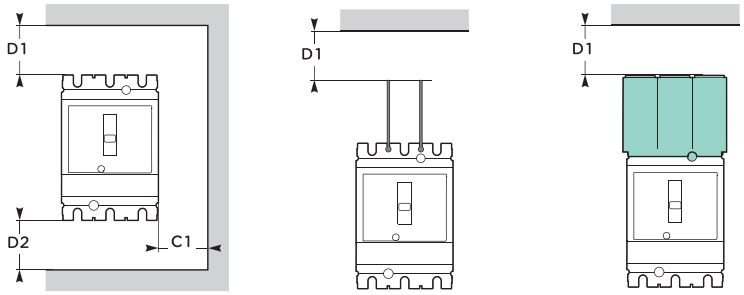

Circuit breaker without accessories　　Circuit breaker with phase partition or long terminal sheath

Exposed or painted metal part

Note: If F<8mm: the insulating partition must be used

Minimum safety distance for TGM5-250 to 630

Table 4

Operating voltage	Distance (mm)						
	Between circuit breakers	Beteen circuit breaker and painted metal part			Exposed metal part		
	A1	C1	D1	D2	C1	D1	D2
U≤440V, suitable for circuit breakers equipping with the following accessories:							
No accessory	0	0	30	30	5	40	40
Phase partition	0	0	0	0	5	0	0
Terminal cover	0	0	0	0	0	0	0
440V<U≤500V, suitable for circuit breakers equipping with the following accessories:							
Phase partition (1)	0	0	0	0	20	10	10
Terminal cover (2)	0	0	0	0	10	10	10
U>500V, suitable for circuit breakers equipping with the following accessories:							
Terminal cover	0	10	30	30	20	40	40

(1) Only suitable for TGM5-250
(2) Suitable for all situations

6.2 Related Distance of Live B are Busbar

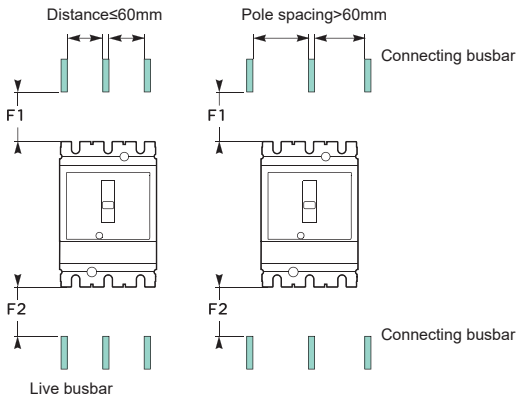

TGM5 Series Moulded Case Circuit Breaker

Minimum safety distance for TGM5-250 to 630

Table 4

Operating voltage	Related distance of live bare busbar			
	Distance ≤ 60 mm		Distance > 60mm	
	F1	F2	F1	F2
U ≤ 440V	350	350	80	80
440V < U ≤ 500V	350	350	120	120
U > 500 V	Disabled: insulating partition between circuit breaker and busbar.			

Only when the configuration scheme passes the detection, the distance can be reduced for special installation.

7 Circuit Breaker Outline Dimensions and Installation Dimensions

7.1 Outline Dimensions and Installation Dimensions for Fixed type Front-Panel

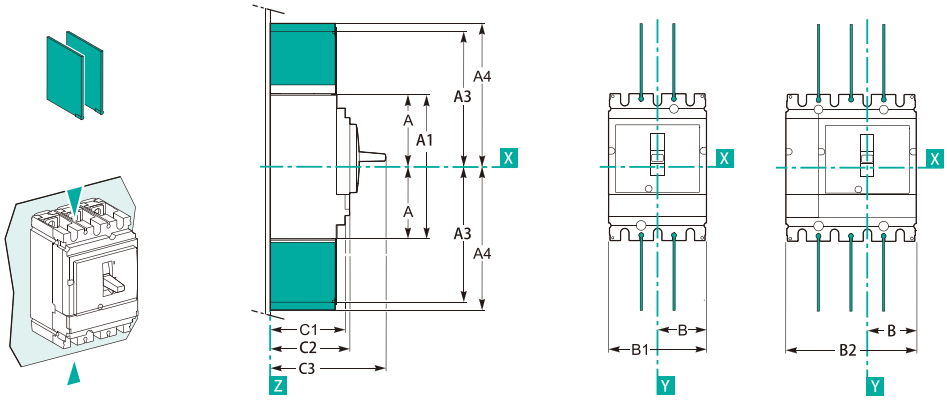

3P 4P

Phase partition

Table 5

Installation	TGM5-250	TGM5-400/630	TGM5-250
Base plate mounted	3P	3P	4P
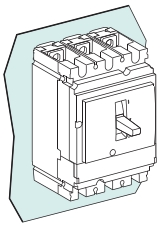	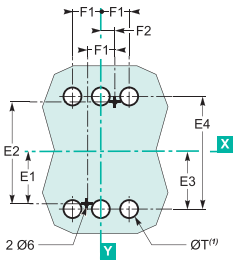	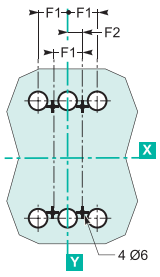	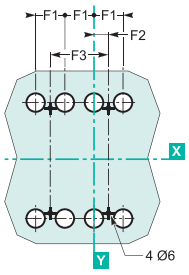

TGM5 Series Moulded Case Circuit Breaker

Table 5, continued

Installation	TGM5-250	TGM5-400/630	TGM5-250
Rail mounted	3P	3P	4P
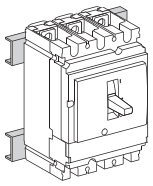	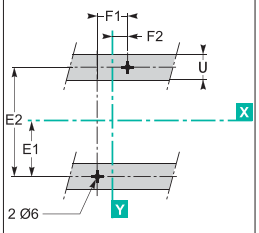	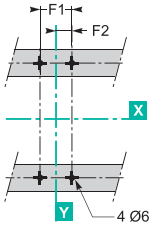	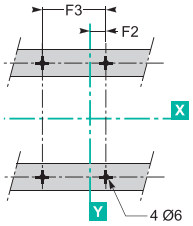

(1) φT is only suitable for rear connection.

Table 6

Model	A	A1	A3	A4	B	B1	B2	C1	C2	C3	E1	E2
TGM5-250	80.5	161	145	178.5	52.5	105	140	81	88	126	62.5	125
TGM5-400/630	127.5	255	200	237	70	140	185	106.5	116	168	100	200
Model	E3	E4	F1	F2	F3	G1	G2	G3	G4	G5	φT	U
TGM5-250	70	140	35	17.5	70	95	75	13.5	23	17.5	24	≤32
TGM5-400/630	113.5	227	45	22.5	90	-	-	-	-	-	32	≤35

TGM5-250

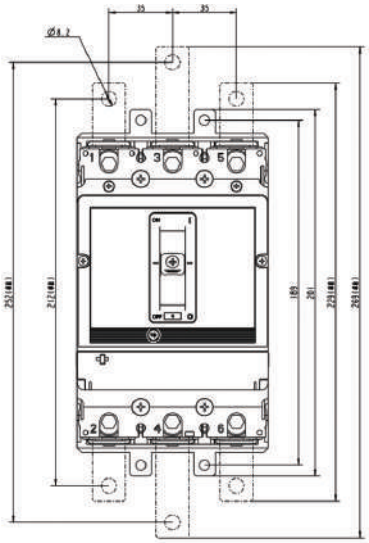

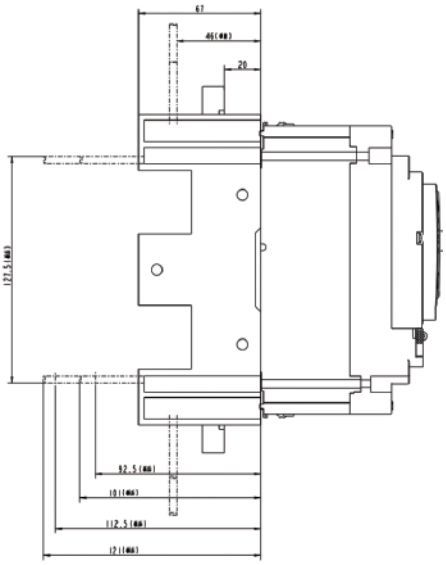

TGM5 Series Moulded Case Circuit Breaker

TGM5-250

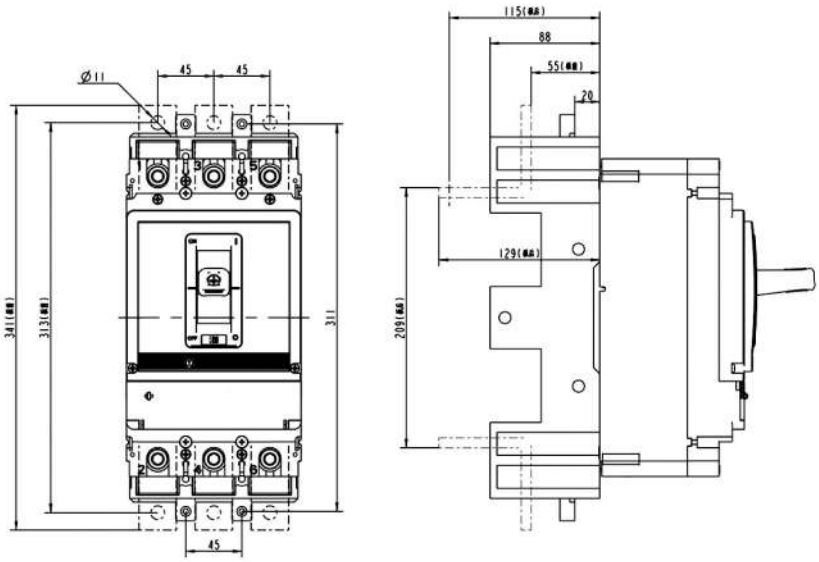

Table 7

Base plate mounted	3P	4P
Front connection (insulating paritition is required between the mounting base plate and the circuit breaker base) 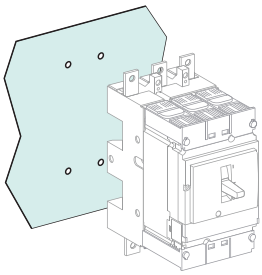	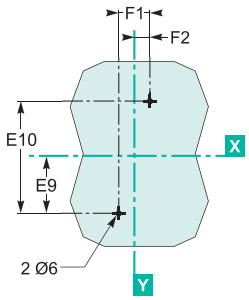	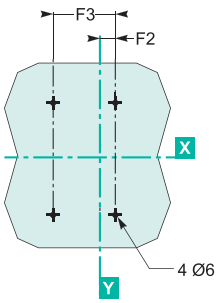
Rail mounted	**3P**	**4P**
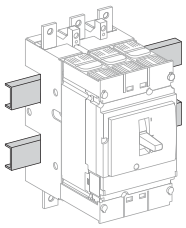	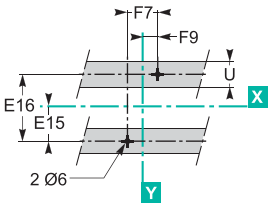	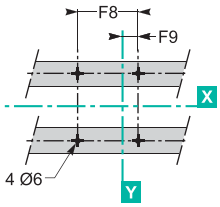

Table 8

Model	E8	E9	E10	E15	E16	F1	F2	F3	F7	F8	F9
TGM5-250	174	77.5	155	37.5	75	35	17.5	70	70	105	35
TGM5-400/630	274	125	250	75	150	45	22.5	90	100	145	50

TGM5 Series Moulded Case Circuit Breaker

7.2 Outline and Dimensions with Motor Mechanism

Fixed type

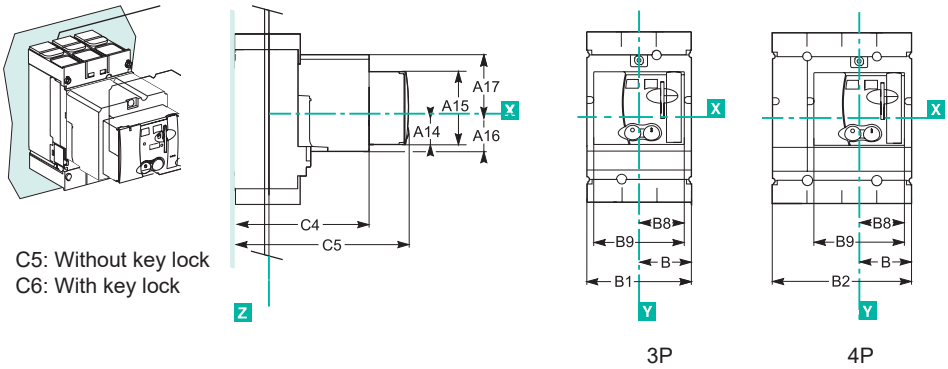

C5: Without key lock
C6: With key lock

Table 9

Model	A14	A15	A16	A17	B	B1	B2	B8	B9	C4	C5	C6	D1
TGM5-250	27.5	73	34.5	62.5	52.5	105	140	45.5	91	143	182	209.5	75
TGM5-400/630	40	123	52	100	70	140	185	61.5	123	215	256	258	100

Note: No drawer type for 250 frames

7.3 Fixed Type and Plug-in Type Front-Panel Hole Size

Table 10

Door hole	TGM5-250	TGM5-400/630
Toggle handle 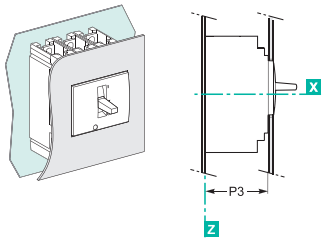	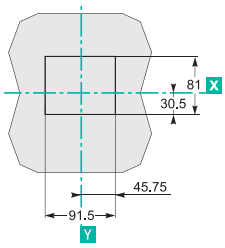	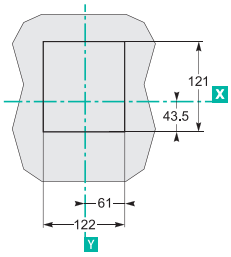
Toggle handle, touchable trip unit 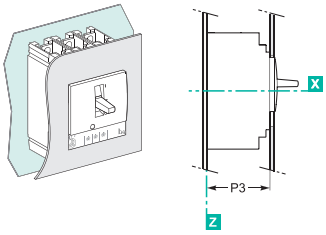	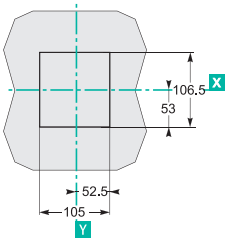	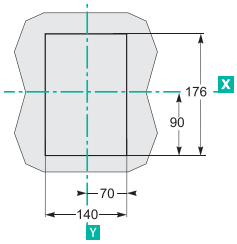

Model	TGM5-250	TGM5-400/630
P3	82	116

Model	TGM5-250	TGM5-400/630
P3	90	107

TGM5 Series Moulded Case Circuit Breaker

8 Accessories

8.1 Internal Accessories

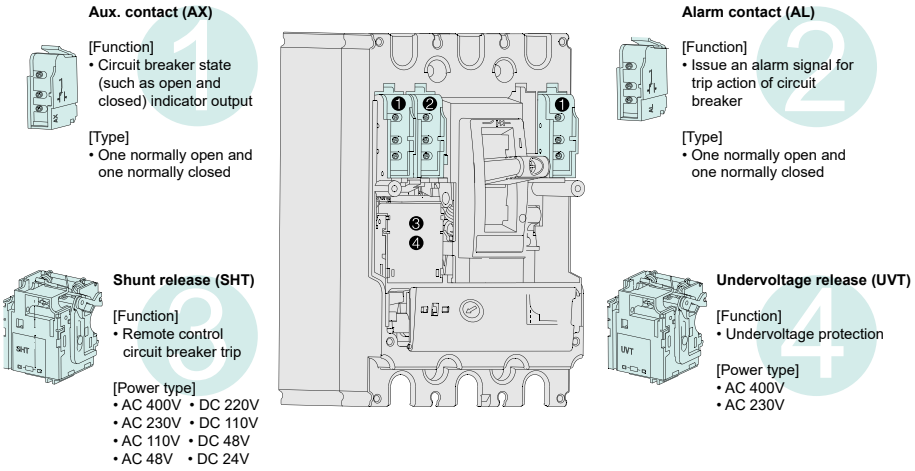

8.2 External Accessories

8.2.1 Motor mechanism (CD2)

Protection grade: IP40

[Function]

- Button used to control the circuit breaker opening and closing action
- Motor energy storage, or manual energy storage via manual operating handle; the two can be freely selected
- With energy storage indication, open/closed indication and operation times indication

Manual operation
Turn the "Manual/Auto" switch to the Manual position, and turn the operating handle to turn the circuit breaker on and off.

Auto operation
Turn the "Manual/Auto" switch to the Auto position, and remotely press the "Closed or Open" button to turn the circuit breaker on and off.
Automatic on/off operation is controlled by a pulse type or self-holding signal.
Only when the control voltage ≥ 85%Un, ≤ 110%Un, it can guarantee that the circuit breaker is reliably switched on and off.

8.3 Accessories Features

8.3.1 Shunt release

a. When the control voltage reaches 70%~100%Un, the circuit breaker can be reliably open.
b. Do not power on for a long time (≤ 5s). Response time: Pulse type≥ 20ms, ≤ 60ms.

8.3.2 Undervoltage release

a. When the control voltage drops to 35%~70%Un, the undervoltage release device should trip, and the circuit breaker should be reliably open.
b. When the control voltage is greater than or equal to 85% Un, the circuit breaker should be reliably closed.
c. When the control voltage is less than 35% Un, the circuit breaker should be prevented from being closed.

Note: For circuit breakers equipped with an undervoltage release, the circuit breaker can be open and closed normally only when the control voltage is greater than or equal to 85% Un.

8.3.3 Aux. contact

Function: To indicator the contact position of the circuit breaker.

When circuit breaker is in the "Open" position

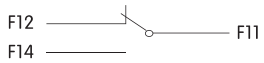

When circuit breaker is in the "Closed" position

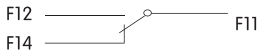

Shunt release wring diagram

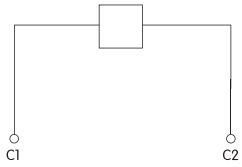

Undervoltage release wring diagram

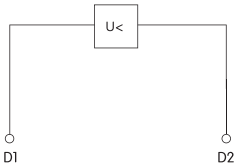

Aux. contact wiring diagram

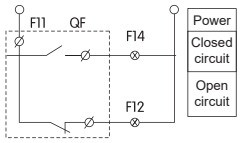

8.3.4 Alarm contact

Function: To indicate possible causes of a circuit breaker trip

●Overload ●Short circuit ●Earth fault ●Undervoltage trip operation or free trip

When the circuit breaker is closed and open normally, the alarm contact does not work; an alarm is only issued for free trip (or fault trip), and the contact position changes; that is, the normally open becomes normally closed, and the normally closed becomes normally open. When the circuit breaker re-trips, the alarm contact can return to its original position.

When the circuit breaker is in the "Open" and "Closed" position

When the circuit breaker is in the free trip (alarm) position

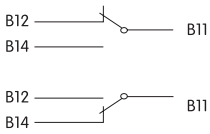

Alarm contact wiring diagram

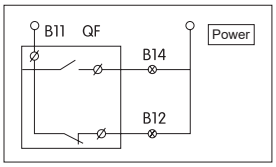

9 Appendix

9.1 Circuit Breaker Inverse Time Characteristic Table

Table 11

Test current name	Setting current multiple	Appointed time		Start state	Use category	Magnetic release operating current（A）
		In≤63A	In ＞ 63A			
Conventional non-trip current	1.05In	≥1h	≥2h	Cold state	For power distribution proteciton	10In±20%
Conventional trip current	1.30In	≥1h	＜ 2h	Hot state		
Conventional non-trip current	1.0In	≥2h		Cold state	For motor protection	12In±20%
Conventional trip current	1.2In	＜ 2h		Hot state		

9.2 Circuit Breaker Trip Characteristic Curve

When the ambient air temperature changes, the trip characteristic will be slightly changed, and that shall be corrected.

The correction coefficients are listed below when with thermal magnetic release:

Table 12

Ambient air temp.	-40°C	-35°C	-30°C	-25°C	-20°C	-15°C	-10°C	-5°C	0°C	5°C	10°C	15°C
Temperature correction coefficient	1.4	1.375	1.35	1.325	1.3	1.275	1.25	1.225	1.2	1.175	1.15	1.125
Ambient air temp.	20°C	25°C	30°C	35°C	40°C	45°C	50°C	55°C	60°C	65°C	70°C	
Temperature correction coefficient	1.1	1.075	1.05	1.025	1.0	0.925	0.85	0.775	0.7	0.625	0.55	

TGM5 Series Moulded Case Circuit Breaker

9.3 Circuit Breaker Derating

High altitude derating

When the altitude exceeds 2000m available in the appropriate working environment, the electrical performance of circuit breaker can be corrected according to the table below

Table 13

Altitude (m)	2000	3000	4000	5000
Power frequency withstand voltage (V)	3000	2500	2000	1800
Operating current correction coefficient	1	0.94	0.88	0.83
Short circuit breaking capacity correction coefficient	1	0.83	0.71	0.63

9.4 Circuit Breaker Installation

◆ Connect with the main circuit

Wiring connection must be carried out by personnel with professional and technical qualifications.

The wiring connection can be conducted only after confirming that the input power supply is completely disconnected.

◆ Select the connecting wire.

The cross-sectional area of the connecting wire and the corresponding rated current are listed in the table below:

Table 14

Rated current (A)	16 20	25	32	40 50	63	80	100	125 140	160	180 200 225	250	315 350	400
Sectional area of wire (mm^2)	2.5	4	6	10	16	25	35	50	70	95	120	185	2400

Table 15

Rated current (A)	Cable		Copper busbar	
	Qty.	Sectional area (mm^2)	Qty.	Size mm x mm
500	2	150	2	30×5
630	2	185	2	40×5

◆ When back-panel wiring, the insulating sleeve must be provided on the terminal.

◆ Connect the pressed lead wire with the conductive pole of circuit breaker through the bolt, and tighten it.

◆ Install a flash barrier between the phases of circuit breaker.

◆ Check

Please check the circuit breaker according to the installation requirements before use, connect the fixed connection part flexibly, and operate the circuit breaker several times repeatedly and check whether its operating mechanism can work flexibly and reliably.

TGM5 Series Moulded Case Circuit Breaker

9.5 Use and Maintenance of Circuit Breaker

- When selecting a circuit breaker, ensure that the technical parameters marked on the circuit breaker should be consistent with the actual requirements.
- The various characteristics and accessories of the circuit breaker are set by the manufacturer, and cannot be adjusted arbitrarily during operation.
- Conduct periodic inspection, remove the dust on the surface of the shell, and keep the cleanliness and good insulation of circuit breaker.
- Select different rated current according to the requirements of the protection object, otherwise the correct protection effect cannot be realized.
- Maintenance and inspection must be conducted by professional technicians.
- To select internal and external accessories by users, the ordered model shall be provided by our company to ensure the quality, and our company will not bear any consequence caused by the selection, purchase or modification by the user arbitrarily.
- Please turn off the circuit breaker before maintenance or operation.
- The circuit breaker shall not be attacked by rain or fallen off during operation, storage, or transportation.

9.6 Application and Order Specification

- The model and specification of circuit breaker shall be specified. For example, to order a 250 frame 3-pole product with current 250A for power distribution, with breaking capacity 200KA, with shunt, and with shunt voltage AC230V, the model is described as TeM7-250R/3310250A230V;
- The shunt undervoltage accessories shall be indicated with rated voltage, such as AC230V;
- The motor mechanism shall be indicated with rated operating voltage, such as AC230V;
- The rotary handle operating mechanism shall be indicated with handle form of DH type or CD2 type.

TEM5 Series Moulded Case Circuit Breaker

1 Overview

TEM5 Series Moulded Case Circuit Breaker is one of the new circuit breakers developed by TENGEN with international advanced technology. It is characterized by comprehensive protection, excellent performance and compact size. The circuit breakers are classified into two types according to their rated ultimate short-circuit breaking capacity (Icu): M type (medium breaking type) and H type (high breaking type), which are ideal products for power distribution and motor protection. It is an ideal product for power distribution and motor protection. With rated insulation voltage of 1000V, they are suitable for infrequent switching of circuits and infrequent starting of motors in circuits with AC 50/60Hz, rated working voltage of 690V and below, and rated current from 12.5A to 800A. The circuit breaker can be equipped with optional communication function module, which makes it convenient to upgrade the original circuit breaker to communication type circuit breaker. The circuit breakers have the functions of overload long delay, short-circuit short delay, short-circuit instantaneous, grounding protection, neutral pole protection, etc. The products can be equipped with undervoltage, shunt, auxiliary, alarm and communication accessories. This series of circuit breakers can be installed vertically (i.e. vertical installation) and horizontally (i.e. horizontal installation).
The circuit breakers comply with the standards: IEC 60947-1, IEC 60947-2.

Four-pole product code

Code	Description	Example
Type A	N pole is not equipped with an overcurrent trip element, and N pole is always powered on, and is not closed and open together with other three poles	3N300A
Type B	N pole is not equipped with an overcurrent trip element, and N pole is closed and open together with other three poles (N pole is closed and then open)	4300B
Type C	N pole is equipped with an overcurrent trip element, and N pole is closed and open together with other three poles (N pole is closed and then open)	4300C
Type D	N pole is equipped with an overcurrent trip element, and N pole is always powered on, and is not closed and open together with other three poles	3N300D

Four-pole product code view

Type A: N pole is not equipped with an overcurrent trip element, and N pole is always powered on, and is not closed and open together with other three poles

No overcurrent release

Type B: N pole is not equipped with an overcurrent trip element, and N pole is closed and open together with other three poles (N pole is closed and then open)

No overcurrent release

Type C: N pole is equipped with an overcurrent trip element, and N pole is closed and open together with other three poles (N pole is closed and then open)

With overcurrent release

Type D: N pole is equipped with an overcurrent trip element, and N pole is always powered on, and is not closed and open together with other three poles

With overcurrent release

TEM5 Series Moulded Case Circuit Breaker

2 Type Designation

TE M 5 – 125 □ □ / □ □ □ □ □ □ □ □ □ □ □ □ □

- Special requirements: Mechanical interlock
- Application
  Default: Conventional application
  Plateau / Damp heat / Environmental protection / Salt spray / Low temperature
- Zero flashover code
  W: Zero flashover hood
- Installation method
  Default: Fixed type front-panel
  B: Fixed type back-panel
  C: Plug-in type back-panel
  F: Plug-in type front-panel
- Accessory voltage
  AC380 / 400V
  AC220 / 230V
  DC220V / DC110V / DC24V
  Multiple accessory voltages shall be indicated separately (such as: Shunt AC230V and Undervoltage AC400V)
- Rated current
  16A.....800A
- Alarm module
  III: Overload alarm and no trip
  No code: No this accessory
- Additional information
  No code: No this accessory
  F: Prepaid
- N pole code
  A: Three protective poles, the zero line is not open together with other poles
  B: Three protective poles, the zero line is open together with other poles
  C: Four protective poles, the zero line is open together with other poles
  D: Four protective poles, the zero line is not open together with other poles
- Purpose
  Default: Power distribution protection
  2: Motor protection
- Internal accessory
  00: No accessory
  10: Shunt release
  20: Aux. contact
  30: Undervoltage release
  40: Shunt + Aux.
  50: Shunt + Undervoltage
  60: Two sets of aux. contacts
  70: Undervoltage + Aux.
  08: Alarm contact
  18: Shunt + Alarm
  28: Aux. + Alarm
  38: Undervoltage + Alarm
  48: Shunt + Alarm + Aux.
  68: Two sets of aux. + Alarm
  78: Undervoltage + Aux. + Alarm
- Trip mode
  2: Short circuit protection
  3: Overload + short circuit
- Number of poles
  3: 3 poles
  3N: 3P+N
  4: 4 poles
- Operation method
  Default: Direct operation
  Z: Operation via rotary handle
  P: Motor operation
- Breaking capacity
- Frame current
- Design No.
- Production category
- Enterprise/Brand code

TEM5 Series Moulded Case Circuit Breaker

3 Technical Parameters

Basic parameters																					
Frame rated current Imn		125				250				400				630				800			
Number of poles		3P, 3P+N, 4P				3P, 3P+N, 4P				3P, 3P+N, 4P				3P, 3P+N, 4P				3P, 3P+N, 4P			
Frequency (Hz)		50				50				50				50				50			
Rated operating voltage Ue(V)		400/550/690				400/550/690				400/550/690				400/550/690				400/550/690			
Rated insulation voltage Ui(V)		800				800				1000				1000				1000			
Rated impulse withstand voltage Uimp (kV)		8				8				12				12				12			
Rated working current In(A)		16A, 20A, 25A, 32A, 40A, 50A, 63A, 80A, 100A, 125A				100A, 125A, 140A, 160A 180A, 200A, 225A, 250A				225A, 250A, 315A, 350A, 400A				400A, 500A, 600A, 630A				400A, 500A, 600A, 630A, 700A, 800A			
Breaking capacity		L	M	H	R	L	M	H	R	L	M	H	R	L	M	H	R	L	M	H	R
Rated limit short circuit breaking capacity Icu (kA)	AC400V	35	50	65	100	35	50	65	100	50	65	85	100	50	65	85	100	50	65	85	100
	AC550V	/	25	25	25	/	25	25	25	/	35	35	35	/	35	35	35	/	35	35	35
	AC690V	5	10	15	15	5	10	15	15	15	20	30	30	15	20	30	30	15	20	30	30
Rated operating short circuit breaking capacity Ics (kA)	AC400V	26	50	50	70	26	50	50	70	35	65	65	85	35	65	65	85	35	65	65	85
	AC550V	/	20	20	20	/	20	20	20	/	25	25	25	/	25	25	25	/	25	25	25
	AC690V	5	5	10	10	5	5	10	10	10	20	20	20	10	20	20	20	10	20	20	20
Isolation function		Yes (3P, 4P)				Yes (3P, 4P)				Yes (3P, 4P)				Yes (3P, 4P)				Yes (3P, 4P)			
Usage category		Class A				Class A				Class B				Class B				Class B			
Service life	Mechanical	40000				40000				20000				20000				20000			
	Electrical	8000				8000				7500				7500				7500			
Flashover distance (mm)	With flashover distance	≤ 50				≤ 50				≤ 100				≤ 100				≤ 100			
	Zero flashover	0				0				0				0				0			
Outline dimensions L*W*H	L type 3P (L*W*H)	151.6*93*99				165*107*100				257*150*150				281*212*155				281*212*155			
	M, H, R type, 3P (L*W*H)	151.6*93*116				165*107*116				257*150*150				281*212*155				281*212*155			
	L type 4P (L*W*H)	151.6*123*99				165*142*100				257*198*150				281*282*155				281*282*155			
	M, H, R type, 4P (L*W*H)	151.6*123*116				165*142*116				257*198*150				281*282*155				281*282*155			
Installation dimensions A*B	A*B	3P:30*129 4P:60*129				3P:35*125 4P:70*125				3P:44*194 4P:94*194				3P:70*243 4P:140*243				3P:70*243 4P:140*243			

Accessory information							
Direct operation via handle	■ (Standard)	■ (Standard)	■ (Standard)	■ (Standard)	■ (Standard)	■ (Standard)	■ (Standard)
Extended rotary handle	□ (Optional)	□ (Optional)	□ (Optional)	□ (Optional)	□ (Optional)	□ (Optional)	□ (Optional)
Motor mechanism	□ (Optional)	□ (Optional)	□ (Optional)	□ (Optional)	□ (Optional)	□ (Optional)	□ (Optional)
Shunt release	□ (Optional)	□ (Optional)	□ (Optional)	□ (Optional)	□ (Optional)	□ (Optional)	□ (Optional)
Undervoltage release	□ (Optional)	□ (Optional)	□ (Optional)	□ (Optional)	□ (Optional)	□ (Optional)	□ (Optional)
Aux. conact	□ (Optional)	□ (Optional)	□ (Optional)	□ (Optional)	□ (Optional)	□ (Optional)	□ (Optional)

TEM5 Series Moulded Case Circuit Breaker

Alarm contact	□ (Optional)	□ (Optional)	□ (Optional)	□ (Optional)	□ (Optional)	□ (Optional)	□ (Optional)
Fixed front-panel	■ (Standard)	■ (Standard)	■ (Standard)	■ (Standard)	■ (Standard)	■ (Standard)	■ (Standard)
Fixed back-panel	□ (Optional)	□ (Optional)	□ (Optional)	□ (Optional)	□ (Optional)	□ (Optional)	□ (Optional)
Plug-in front-panel (not available for 4P product)	□ (Optional)	□ (Optional)	□ (Optional)	□ (Optional)	□ (Optional)	□ (Optional)	□ (Optional)
Plug-in back-panel	□ (Optional)	□ (Optional)	□ (Optional)	□ (Optional)	□ (Optional)	□ (Optional)	□ (Optional)
Transition bar	□ (Optional)	□ (Optional)	□ (Optional)	□ (Optional)	□ (Optional)	□ (Optional)	□ (Optional)
Phase partition	■ (Standard)	■ (Standard)	■ (Standard)	■ (Standard)	■ (Standard)	■ (Standard)	■ (Standard)
Handle lock	□ (Optional)	□ (Optional)	□ (Optional)	□ (Optional)	□ (Optional)	□ (Optional)	□ (Optional)
Zero flashover accessory	□ (Optional)	□ (Optional)	□ (Optional)	□ (Optional)	□ (Optional)	□ (Optional)	□ (Optional)
Mechanical inerlock	□ (Optional)	□ (Optional)	□ (Optional)	□ (Optional)	□ (Optional)	□ (Optional)	□ (Optional)

Inverse Time Limit Characteristic Table of TEM5 Series Circuit Breaker

Test current name	Set current multiple	Appointed time		Starting state	Use category	Electromagnetic release operating current (A)
		In ≤ 63A	In ＞ 63A			
Conventional no-trip current	1.05In	≥ 1h	≥ 2h	Cold state	For power distribution protection	10In±20%
Conventional trip current	1.30In	< 1h	< 2h	Hot state		
Conventional no-trip current	1.0In	≥ 2h		Cold state	For motor protection	12In±20%
Conventional trip current	1.2In	< 2h		Hot state		

4 Working and Installation Conditions

- Ambient temperature: Low temperature type can work in the range of 40°C-+70°C, the mean temperature within 24 hours does not exceed +35°C; when the working temperature is lower than -5°C or higher than 40°C, derating is required.
- Atmospheric conditions: The relative humidity does not exceed 50% at the ambient temperature +40°C, and a higher relative humidity can be allowed at a lower temperature; the relative humidity is up to 90% when the monthly mean minimum temperature is +25°C, by considering condensation occurred on the surface of the product due to temperature changes.
- Altitude: The product can work at 2000m altitude; if more than 2000m, the altitude derating is required.
- Installation category: The installation category is Class III for main circuit, and is Class II for aux. circuit and control circuit not connected to the main circuit.
- Pollution degree: Level 3
- Use category: See technical data sheet
- Protection grade: IP40 (installed in the small chamber with door frame in the cabinet)
- Electromagnetic compatibility: Electromagnetic environment A
- Installation angle: The vertical slope does not exceed 5°

TEM5 Series Moulded Case Circuit Breaker

5 TEM5 Release and Accessory Code

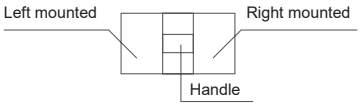

Alarm contact ●
Shunt release ■
Aux. contact ○
Undervoltage release ▲

	Accessory code		Accessory installation and lead mode					
Accessory name	Electromagnetic release	Complex release	TEM5-125		TEM5-250		TEM5-400 TEM5-630 TEM5-800	
No accessory	200	300						
Alarm contact	208	308						
Shunt release	210	310						
Aux. contact	220	320						
Undervoltage release	330	330						
Shunt release Aux. contact	240	340						
Shunt release Undervoltage release	250	350						
Two sets of aux. contacts	260	360						
Aux. contact Undervoltage release	270	370						
Shunt release Alarm conact	218	318						
Aux. contact Alarm contact	228	328						
Undervoltage release Alarm contaact	238	338						
Shunt release Aux. contact Alarm contact	248	348						
Two sets of aux. contacts Alarm contact	268	368						
Undervoltage release Aux. contact Alarm contact	278	378						

TEM5 Series Moulded Case Circuit Breaker

6 TEM5 series circuit breaker protection characteristic curve

TEM5-125(L/M/H/R) time/current characteristic curve

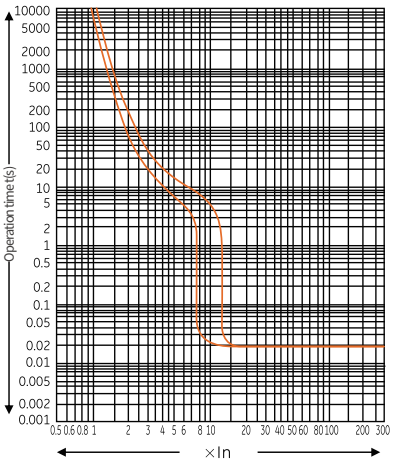

TEM5-250(L/M/H/R) time/current characteristic curve

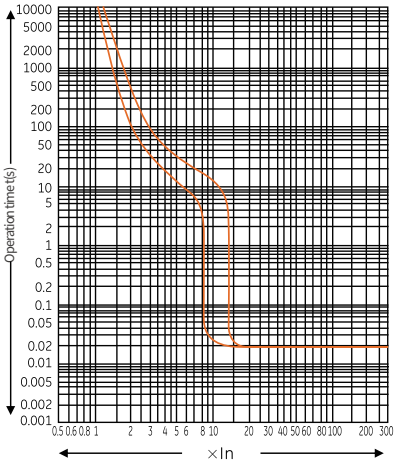

TEM5-400 (L/M/H/R) time/current characteristic curve

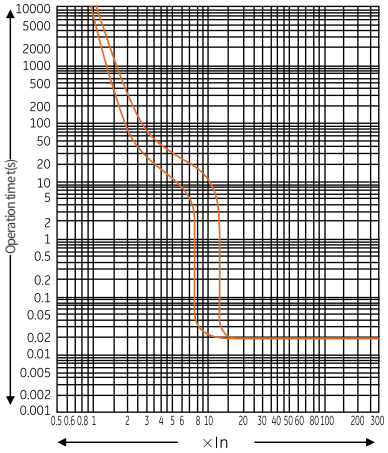

TEM5-630 (L/M/H/R) time/current characteristic curve

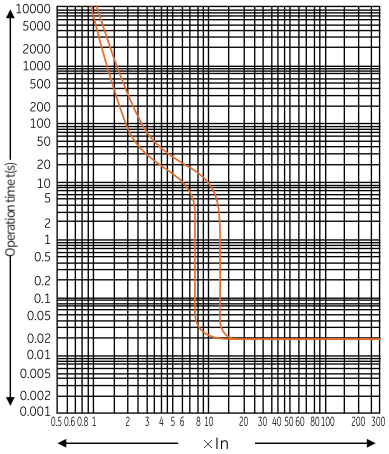

TEM5-800 (L/M/H/R) time/current characteristic curve

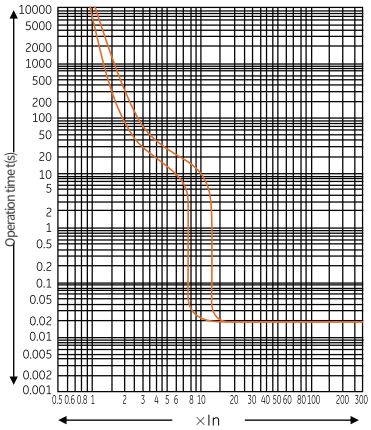

TEM5 Series Moulded Case Circuit Breaker

7 Main Accessories

Internal accessory code

OF	E5	-	125	L	D	A2
Accessory code	Code of adaptive circuit breaker		Frame current code	Installation position	Wire lead-out mode	Voltage grade
OF: Aux. contact SD: Alarm contact MN: Undervoltage release MX: Shunt release	E5: TEM5 series		63、125、160、250、320、400、630、800	L: Left R: Right	Default: Direct wire lead-out D: Terminal box	A1：AC220/230/240V A2：AC380/400/415V D1：DC24V D2：DC110V D3：DC220V

7.1 Aux. contact

It is an accessory connected in the auxiliary circuit of breaker circuit to remotely indicate the ON/OFF/Free Trip state of the circuit breaker.

OF E5 - □ □ □ □

- Code of aux. contact (1: One normally open and one normally closed; 2: Two normally open and two normally closed)
- Wire lead-out mode
- Default: Direct wire lead-out * D: Terminal box
- Installation position code L: Left R: Right
- Frame current
- Code of adaptive circuit breaker E5: TEM5 series
- Accessory code OF: Aux. contact

* Note: The default direct lead-out length of the wire is 50cm, and other length shall be indicated when ordering if required.

For example: The code of TEM5 series 250 frame right auxiliary (1ON1OFF) with terminal box is: OFE5-250RD2.

Wiring diagram

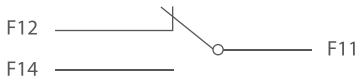

Circuit breaker in the “OFF” state

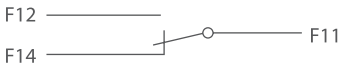

Circuit breaker in the “ON” state

Electrical characteristics

Frame rated current	Inm≤320A		Inm≥400A	
Conventional thermal current Ith	3A		6A	
Use category	AC-15	DC-13	AC-15	DC-13
Rated operating current	0.3A	0.15A	1A	0.15A

TEM5 Series Moulded Case Circuit Breaker

7.2 Undervoltage release

It is used to realize the undervoltage protection function of the circuit breaker to disconnect the circuit breaker when the power voltage is too low for the protection of the power equipment.

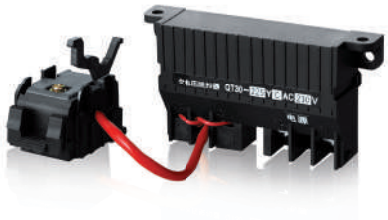

a When the voltage is 35%-70% rated operating voltage, the undervoltage release shall work to reliably trip the circuit breaker

b When the voltage is 85%-110% rated operating voltage, the undervoltage release shall ensure that the circuit breaker is closed

c When the voltage is below 35% rated operating voltage, the undervoltage release shall prevent the circuit breaker from closing.

*Note: The undervoltage release must be powered on first, and then the circuit breaker can re-trip and is closed, otherwise the circuit breaker may be damaged.

MN E5 - □ □ □ □

- Voltage code (See the internal accessory code Table 12, for A1, A2 only)
- Wire lead-out mode
  - Default: Direct wire lead-out *
  - D: Terminal box
- Installation position code: L: Left R: Right
- Frame current
- Adaptive circuit breaker code: E5: TEM5 series
- Accessory code MN: Undervoltage release

* Note: The default direct lead-out length of the wire is 50cm, and other length shall be indicated when ordering if required.

For example: The code of TEM5 series 250 frame left undervoltage AC220 (direct wire lead-out) is: MNE5-250LA1.

Wiring diagram

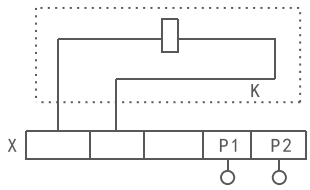

X – Terminal block Power input

* Note: The internal wiring diagram of circuit breaker is shown in dashed box.

Electrical characteristics

Product model	Starting current (mA)		Power consumption (W)	
	AC400V	AC230V	AC400V	AC230V
125/160	9.95	15.55	4.55	3.82
250/320	10.88	15.83	4.85	3.92
400	9.5	11.2	3.8	2.83
630/800	5.4	7.75	2.7	1.85

TEM5 Series Moulded Case Circuit Breaker

7.3 Alarm contact

It is an accessory connected in the auxiliary circuit of circuit breaker to indicate that the circuit breaker is in the no-trip (ON or OFF) or trip (TRIP) sate.

When the trip indication is issued by the alarm contact, there are four possibilities:

- Overload or short circuit failure
- Test button trip
- Residual current failure
- Shunt/Undervoltage release works

SD E5 - □ □ □

- Wire lead-out mode
  - Default: Direct wire lead-out *
  - D: Terminal box
- Installation position code L: Left R: Right
- Frame current
- Adaptive circuit breaker code: E5: TEM5 series
- Accessory code SD: Alarm contact

* Note: The default direct lead-out length of the wire is 50cm, and other length shall be indicated when ordering if required.

For example: The code of TEM5 series 250 frame left alarm (direct wire lead-out) is: SDE5-250L.

Wiring diagram

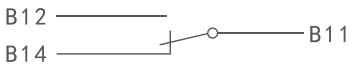

Circuit breaker in the Free Trip (Alarm) state

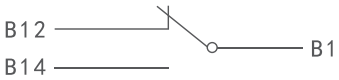

Circuit breaker in the “ON” and “OFF” state

Electrical characteristics

Frame rated current	Inm≤320A		Inm≥400A	
Conventional thermal current Ith	3A		6A	
Use category	AC-15	DC-13	AC-15	DC-13
Rated operating current	0.3A	0.15A	1A	0.15A

TEM5 Series Moulded Case Circuit Breaker

7.4 Shunt release
Used to remotely make the circuit breaker open

When the voltage is 70%-100% rated control power voltage, the shunt release shall trip the circuit breaker reliably.

MX E5 - □ □ □ □

- Voltage code (See the internal accessory code table)
- Wire lead-out mode
  - Default: Direct wire lead-out *
  - D: Terminal box
- Installation position code: L: Left R: Right
- Frame current
- Adaptive circuit breaker code: E5: TEM5 series
- Accessory code MX: Shunt release

* Note: The default direct lead-out length of the wire is 50cm, and other length shall be indicated when ordering if required.
For example: The code of TEM5 series 250 frame left shunt DC220 (direct wire lead-out) is: MXE5-250LD3.

Wiring diagram

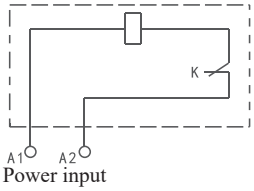

Power input

* Note:
K – The micro switch connected to the coil in series in the shunt release is a normally closed contact. When the circuit breaker is powered off, this contact will be disconnected automatically, and is closed when power-on.

When the control voltage is DC24V, the maximum length of copper wire shall meet the following requirements:

Sectional area of wire / Rated control power voltage Uc (DC24V))	1.5mm²	2.5mm²
AC220/230/240V	150m	250m
AC380/400/415V	100m	160m

If failure to meet the requirements of the above table, it is recommended to refer to the following diagrams in the design of the circuits of shunt controller:

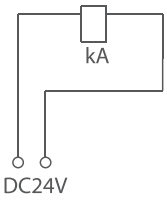

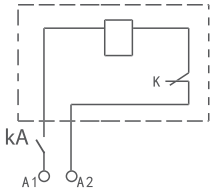

Power input

*Note: KA is the DC24V intermediate relay, and the current capacity of the contact is 1A.

Electrical characteristics

Product model	Starting current (mA)				Power consumption (W)			
	AC400V	AC230V	DC220V	DC24V	AC400V	AC230V	DC220V	DC24V
125/160	0.35	0.45	0.37	4.52	95.8	73	90.7	91.2
250/320	0.42	0.48	0.39	4.51	112	68.8	90.7	85.3
400	0.48	0.51	0.41	4.51	132	78.3	94.4	110
630/800	0.54	0.85	1.21	5.51	163	153	158	120

TEM5 Series Moulded Case Circuit Breaker

External accessory code

CD1	E5	-	125	A2	
Accessory code	Code of adaptive circuit breaker		Frame current code	Voltage grade	Code of the number of poles
AH: Round handle operating mechanism	E5: TEM5 series		63, 125, 160, 250, 320, 400, 630, 800	A1：AC220/230/240V A2：AC380/400/415V D1：DC24V D2：DC110V C3：DC220V	Two poles: 2P Three poles: 3P Four poles: 4P
RH: Square handle operating mechanism					
CD1: AC motor mechanism					
CD2: AC and DC common motor mechanism					
GP: Transition busbar					
GB: Phase partition					
BH: Back-panel wiring					
LS: Mechanical interlock					
SB: Handle lock					

7.5 Handle operating mechanism

To operate the circuit breaker through the rotation of the handle; the rotary handle that meet the ergonomic design requirements can ensure more flexible operation of circuit breaker.

TEM5 series circuit breaker has two types of handle operating mechanisms:

- Direct rotary handle (round handle operating mechanism, square handle operating mechanism)
- Extended rotary handle (round extended handle operating mechanism, square extended handle operating mechanism)

RH E5 - □

Frame current
Adaptive circuit breaker code: E5: TEM5 series
Accessory code
AH: Round handle operating mechanism
RH: Square handle operating mechanism

For example: The code of the round handle operating mechanism for TEM5 series 250 frame is: AHE5-250.

Outline dimensions of handle operating mechanism

Roary handle and outline and installation dimensions

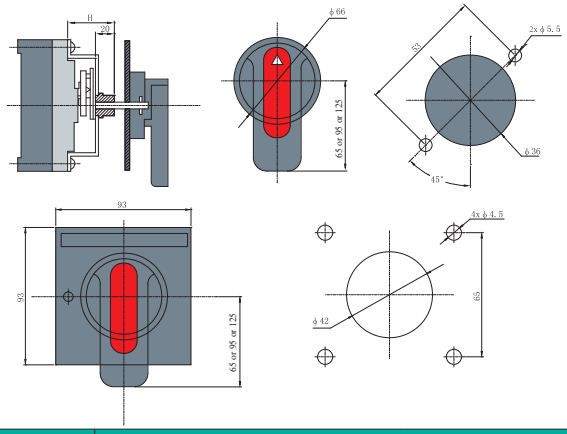

Model & Spec.	TeM5,TeM5L,TeM5DC			
Frame current	125	250	400	630/800
Installation dimensions (H)	61	59	87	97

Model & Spec.	TeM5E			
Frame current	125/160	250/320	400/630	800
Installation dimensions (H)	61	59	87	97

TEM5 Series Moulded Case Circuit Breaker

7.6 Motor mechanism

Used to remotely and electrically close, open and re-trip the circuit breaker and used in the automation control application.

CD2 E5 - □ □

- Voltage code (see external accessory codes table)
- Frame current
- Code of adaptive circuit breaker E5: TEM5 series
- Accessory code CD2: AC and DC common motor mechanism

* Note: The default direct lead-out length of the wire is 50cm, and other length shall be indicated when ordering if required. For example: The code of the motor mechanism AC380V of TEM5 series 250 frame is: CD2E5-250A2.

Electrical characteristics and wiring diagram

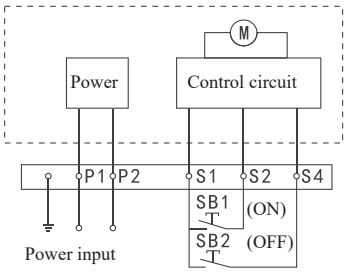

* Note:

K – The micro switch connected to the coil in series in the shunt release is a normally closed contact. When the circuit breaker is powered off, this contact will be disconnected automatically, and is closed when power-on.

P1 and P2 are external power inputs

SB1 and SB2 are operating buttons (provided by user)

Outline and Installation Dimensions

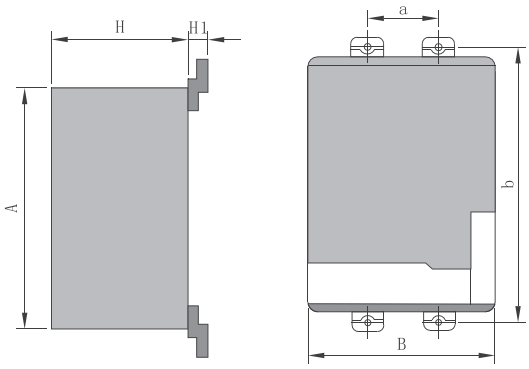

Spec. & Model	Frame current	A	B	H	H1	a	b
TeM5 TeM5L TeM5DC	125	116	90	77	22	30	129
	250	116	90	77	17	35	126
	400	176	130	115	24	44	194
	630/800	176	130	115	27	70	243

Spec. & Model	Frame current	A	B	H	H1	a	b
TeM5E	125/160	111	73	77	20	30	134
	250/320	116	90	77	17	35	146
	400/630	176	130	115	30	44	194
	800	176	130	115	27	70	243

TEM5 Series Moulded Case Circuit Breaker

7.7 Transition busbar

It makes the wiring method of circuit breaker more flexible. By installing this accessory, the phase spacing can be increased, improving the safety between the lines.

GP E5 - □

- Code of the number of poles
  - 2P: Two poles
  - 3P: Three poles
  - 4P: Four poles
- Adaptive circuit breaker code: E5: TEM5 series
- Accessory code GP: Transition busbar

Note: The expanded terminal code only contains transition busbar located at one end of the wire inlet and outlet (for example, 3P only has three wiring boards). If wire inlet and outlet both require transition busbars, please order two sets.
For example: The code of TEM5 series 250 frame 3P transition board is GPE5-2503P.

7.8 Phase partition

It can enhance the insulation property. Even after the switch is installed, it can be installed in the slot on the front side.

GB E5 - □

- Code of number of poles
  - 2P: Two poles
  - 3P: Three poles
  - 4P: Four poles
- Adaptive circuit breaker code: E5: TEM5 series
- Accessory code GB: Phase partition

*Note: The phase partition is the standard accessory for one circuit breaker (2 pieces for two poles, 4 pieces for three poles, 6 pieces for four poles)
For example: The code of TEM5 series 250 frame 3P phase partition is TEM5-2503P.

7.9 Zero flashover

The zero flashover is consistent of the flame extinguishing chamber and zero flashover shield to extinguish the flashover.

Flame extinguishing chamber

Zero flashover shield

W E5 - □ □

- Code of number of poles
  - 3P: Three poles
  - 4P: Four poles
- Frame current
- Adaptive circuit breaker code: E5: TEM5 series
- Accessory code W: Zero flashover

For example: The code of TEM5 series 250 frame 3P zero flashover is WE5-2503P.

TEM5 Series Moulded Case Circuit Breaker

7.10 Back-panel wiring
It makes the wiring method of the circuit breaker more flexible. By installing this accessory, the back-panel wiring connection can be realized.

BH E5 - □ □

- Code of number of poles
  - 2P: Two poles
  - 3P: Three poles
  - 4P: Four poles
- Frame current
- Adaptive circuit breaker code: E5: TEM5 series
- Accessory code BH: Back-panel wiring

For example: The code of TEM5 series 250 frame 3P back-panel is: BHE5-2503P.

7.11 Mechanical interlock
It can make two circuit breakers are interlocked to prevent them from power-on simultaneously.

LS E5 - □ □

- Code of number of poles
  - 3P: Three poles
  - 4P: Four poles
- Frame current
- Adaptive circuit breaker code: E5: TEM5 series
- Accessory code LS: Mechanical interlock

For example: The code of TEM5 series 250 frame 3P mechanical interlock is: LSE5-2503P.

TEM5 Series Moulded Case Circuit Breaker

7.12 Handle lock
To effectively prevent the product from being powered on

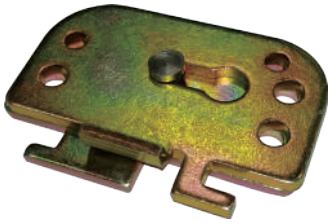

SB E5 - □ □

- Code of number of poles
  - 2P: Two poles
  - 3P: Three poles
  - 4P: Four poles
- Frame current
- Adaptive circuit breaker code: E5: TEM5 series
- Accessory code SB: Handle lock

For example: The code of TEM5 series 250 frame 3P handle lock is: SBE5-2503P.

7.13 Leakage alarm module

Leakage current

Input voltage	AC220/230V、AC380/400V、DC24V
Wiring diagram	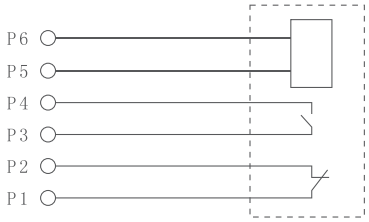 Description: P5-P6: Input power; P1-P2, P3-P4: Contact capacity AC230V, 5A. Note: The wiring diagram of the internal accessories of the leakage alarm module is shown in dashed box.

Electronic accessories of product

It can be divided into the shunt module accessory, overload alarm no-trip module accessory, communication module accessory and four-remote communication module accessory.

TEM5 Series Moulded Case Circuit Breaker

7.14 Shunt alarm communication accessories
Shunt module accessory: With the appropriate operating voltage applied, conduct the shunt trip operation of the circuit breaker.
Overload alarm no-trip module accessory: To realize the circuit breaker does not trip in the event of overload, and an alarm signal is output.
Communication module accessory: The RS485 communication interface is used for transmission. Connected to the host computer, the real-time monitoring of the current of circuit breaker and the shunt trip command issuing to conduct the trip operation ca be realized.
Note: Three overlapped module functions can be selected.

Input voltage	AC400V/230V
Wiring diagram	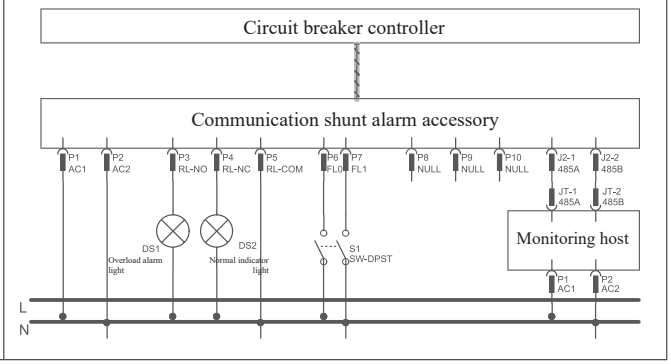

7.15 Four-remote communication accessory
This accessory is installed on the side of the switch to realize the “four-remote” functions namely remote control, remote regulation, remote metering, and remote signaling of the circuit braker by cooperating with the auxiliary alarm accessory and motor mechanism, suitable for the intelligent automation application.

Input voltage	AC400V/230V
Wiring diagram	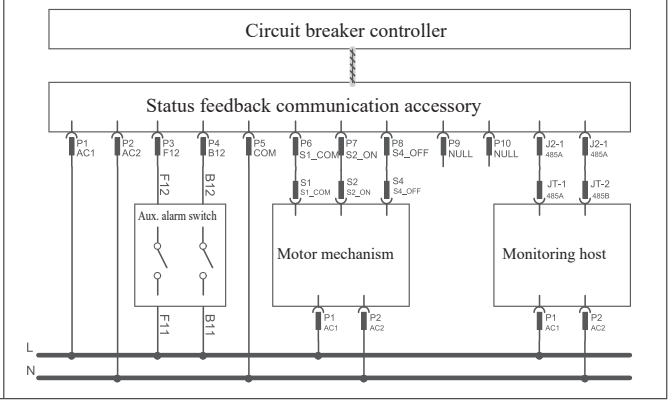

TEM5 Series Moulded Case Circuit Breaker

8 TEM5 Outline Dimensions and Installation Dimensions

Product outline dimensions and installation dimensions (non-zero flashover)

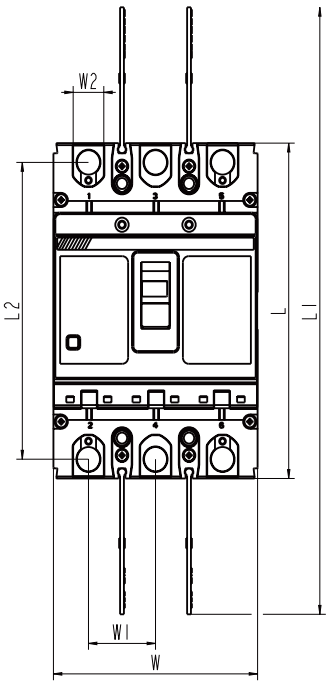

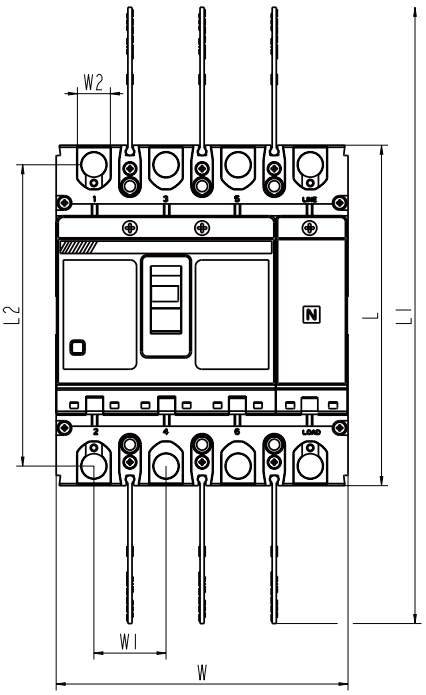

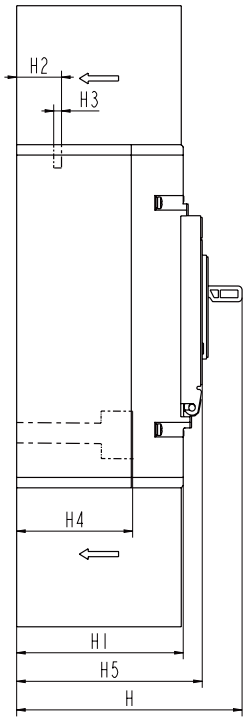

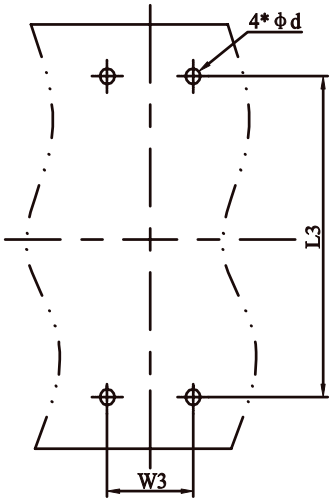

TEM5 Series Moulded Case Circuit Breaker

Product outline dimensions and installation dimensions (zero flashover)

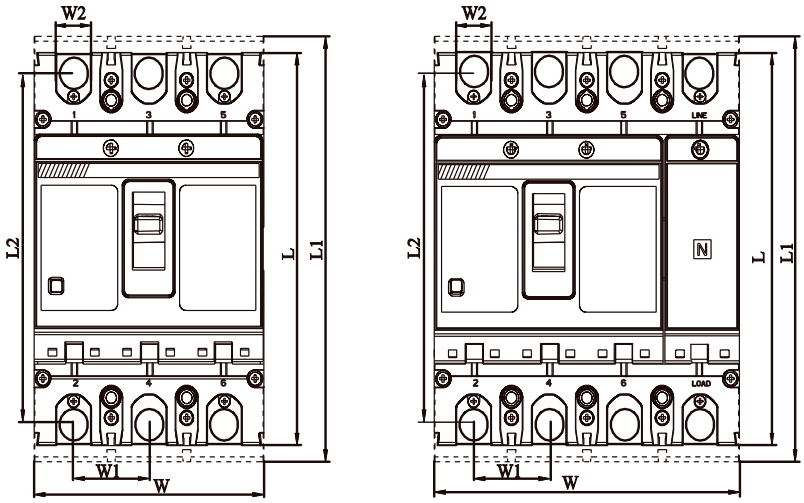

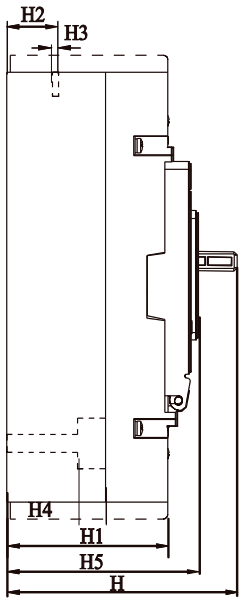

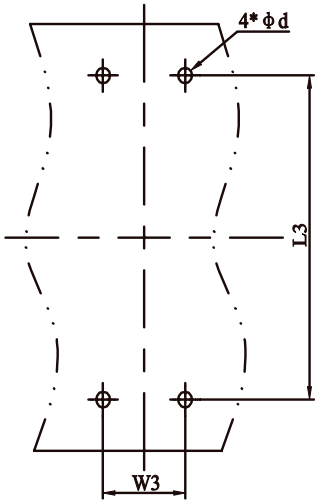

Note: The zero flashover shield is shown in the dashed box.

TEM5 Series Moulded Case Circuit Breaker

Model	Number of poles	Outline dimensions (mm)													Installation dimensions (mm)		
		L	L1		W	W1	W2	H	H1	H2	H3	H4	H5	L2	L3	W3	Φd
			Non-zero flashover	Zero flashover													
TeM5-125L	3	150	253	164	92	30	18	100	65	26	4	30	80	131	129	30	Φ4.5
	4				122											60	
TeM5-125M	3				92			116	82	28		25	97			30	
	4				122											60	
TeM5-125H	3				92											30	
	4				122											60	
TeM5-125R	3				92											30	
	4				122											60	
TeM5-250L	3	165	300	180	107	35	23	100	68	25	4	44	78	146	126	35	Φ4.5
	4				142											70	
TeM5-250M	3				107			116	85	23		60	95			35	
	4				142											70	
TeM5-250H	3				107											35	
	4				142											70	
TeM5-250R	3				107											35	
	4				142											70	
TeM5-400L	3	257	465	285	150	48	33	150	100	39	5	47	114	223	194	44	Φ7
	4				198											94	
TeM5-400M	3				150											44	
	4				198											94	
TeM5-400H	3				150											44	
	4				198											94	
TeM5-400R	3				150											44	
	4				198											94	
TeM5-630L	3	280	496	303	210	70	45	155	103	42	6	70	122	243	243	70	Φ7
	4				280											140	
TeM5-630M	3				210											70	
	4				280											140	
TeM5-630H	3				210											70	
	4				280											140	
TeM5-630R	3				210											70	
	4				280											140	
TeM5-800L	3	280	496	303	210	70	45	155	103	42	6	70	122	243	243	70	Φ7
	4				280											140	
TeM5-800M	3				210											70	
	4				280											140	
TeM5-800H	3				210											70	
	4				280											140	
TeM5-800R	3				210											70	
	4				280											140	

Note: If the external-hang type accessories are installed, a 22mm installation space shall be reserved on single side of the product.

TEM5 Series Moulded Case Circuit Breaker

TEM5 Plug-in Type Front-Panel Installation Dimensions

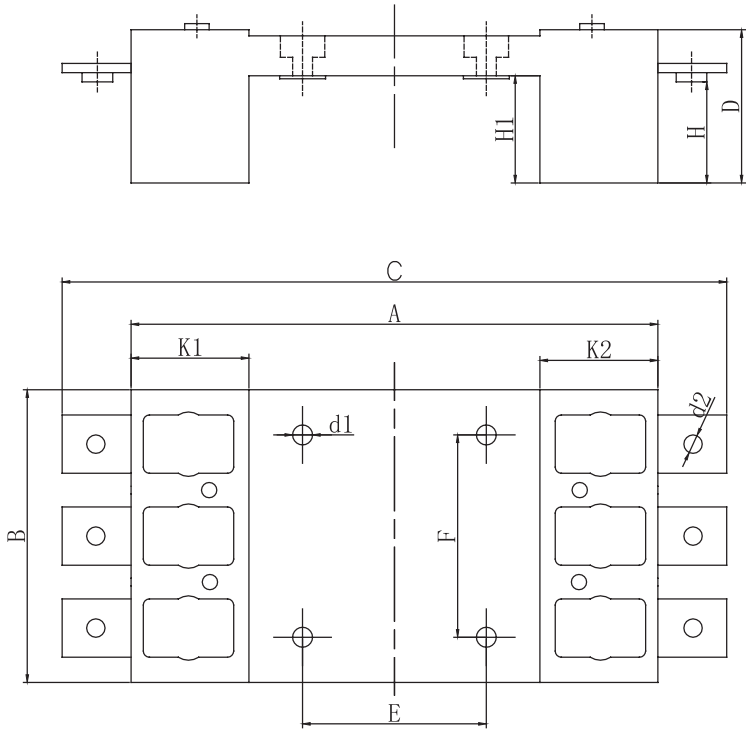

The outline and installation dimensions of the TEM5 front-panel plug-in type are listed in Table:

Model	Outline and installation dimensions (mm)											
	A	B	C	D	E	F	H	H1	K1	K2	d1	d2
TeM5-125	172	96	217	50	60	66	13	35	38	38	7	Φ8
TeM5-250	183	110	261	51.5	64	70	42.5	35	44	44	7	Φ8
TeM5-400	276	150	352	80	135	115	31	平	平	平	8.5	Φ11
TeM5-630/800	305	210	409	87	144	90	16	61	62	62	11	Φ13

TEM5 Series Moulded Case Circuit Breaker

TEM5 Plug-in Type Back-Panel Installation Dimensions

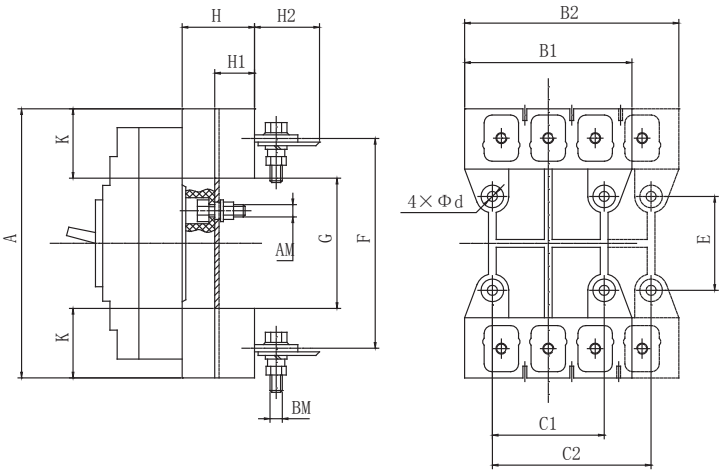

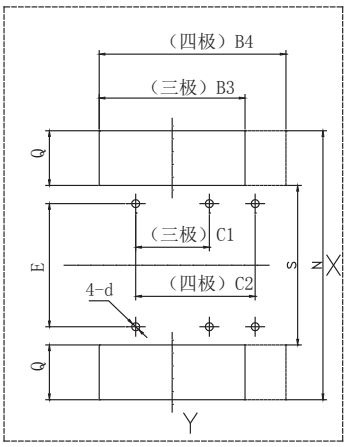

Size of hole on the mounting plate (Unit: mm)

The outline and installation dimensions of the TEM5 back-panel plug-in type are listed in Table:

Model	Outline and installation dimensions (mm)																		
	A	B1	B2	C1	C2	E	F	G	K	H	H1	H2	N	S	Q	B3	B4	AM	BM	4-d
TeM5-125	168	91	125	60	90	58	132	92	38	50	33	28	178	82	48	101	135	M6	M8	Φ6.5
TeM5-250	186	107	145	70	105	54	145	94	46	50	33	37	196	84	56	117	155	M6	M8	Φ6.5
TeM5-400	280	149	200	60	108	129	224	170	55	60	38	46	290	160	65	159	210	M8	M12	Φ8.5
TeM5-630/800	305	210	280	90	162	146	242	181	62	87	60	22	315	171	72	220	290	M10	M14	Φ11

TEM5 Series Moulded Case Circuit Breaker

Installation Safety Gap

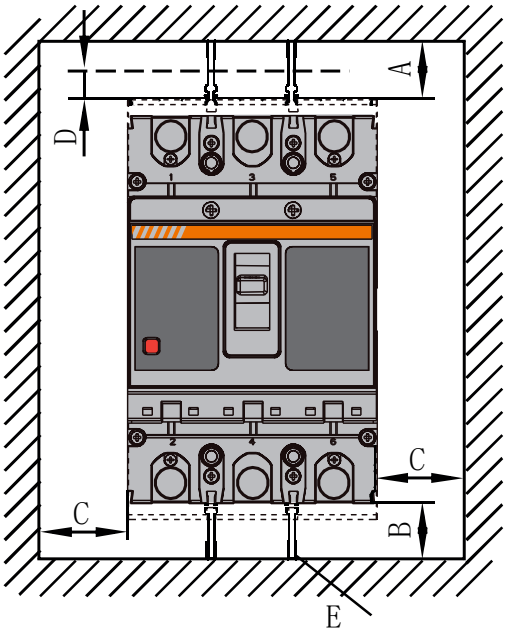

A: To conductive circuits (including unobstructed objects or earthed metals)
B: Circuit breaker terminal to the bottom wall
C: The side of circuit breaker to side wall (including unobstructed or earthed metal)
D: To non-conductive parts
Note: E is the phase partition. A phase partition or zero flashover shield must be installed.

Installation safety gap of TEM5/TEM5L/TEM5E circuit breaker

Model	Installation safety gap of circuit breaker (mm)				
	A		B	C	D
	Without zero flashover shield	With zero flashover shield			
125A	50	25	25	25	25
250A	50	25	25	25	25
400A	100	25	25	25	25
630/800A	100	25	25	25	25

Installation safety gap of TEM5DC circuit breaker

Model	Installation safety gap of circuit breaker (mm)			
	A	B	C	D
TeM5DC-100	50	25	25	25
TeM5DC-250	50	25	25	25
TeM5DC-400	100	25	25	25
TeM5DC-630	100	25	25	25
TeM5DC-800	100	25	25	25

TEM5 Series Moulded Case Circuit Breaker

Reference sectional area of the connecting wire with different rated current

Rated current (A)	10	16/20	25	32	40/50	63	80	100	125/140	160	150/200/225	250	315/350	400
Sectional area of wire (mm^2)	1.5	2.5	4	6	10	16	25	35	50	70	95	120	185	240

Rated current (A)	Cable		Copper busbar	
	Sectional area (mm^2)	Qty.	Size (mm x mm)	Qty.
500	150	2	30×5	2
630	185	2	40×5	2
700/800	240	2	50×5	2

Derating coefficient under different temperatures

Product model	Power current (A)	Ambient temp.						
		30°C	40°C	45°C	50°C	55°C	60°C	70°C
TeM5DC-125	125	1In	1In	1In	1In	0.97In	0.93In	0.85In
TeM5DC-250	250	1In	1In	1In	1In	0.97In	0.93In	0.85In
TeM5DC-400	400	1In	1In	1In	1In	0.95In	0.94In	0.85In
TeM5DC-630	630	1In	1In	1In	1In	0.95In	0.91In	0.8In
TeM5E-125	125	1In	1In	1In	1In	0.94In	0.92In	0.87In
TeM5E-160	160	1In	1In	1In	1In	0.94In	0.92In	0.88In
TeM5E-250	250	1In	1In	1In	1In	0.94In	0.92In	0.88In
TeM5E-320	320	1In	1In	1In	1In	0.94In	0.92In	0.88In
TeM5E-400	400	1In	1In	1In	1In	0.94In	0.92In	0.88In
TeM5E-630	630	1In	1In	1In	1In	0.94In	0.92In	0.88In
TeM5E-800	800	1In	1In	1In	1In	0.94In	0.92In	0.88In

TEM5 Series Moulded Case Circuit Breaker

Zero flashover product installation steps (TEM5, TEM5L, TEM5E)

Installation step diagram

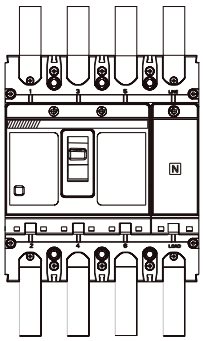

Stp1: Draw out the flame extinguishing chamber at the inlet terminal of the product (opening the upper cover is not required), and then fix the product in the power distribution box using the normal installation method.

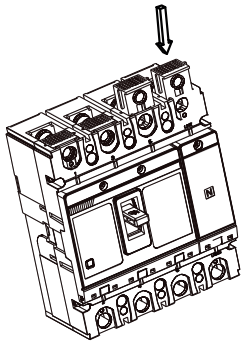

Stp2: Insert the flame extinguishing chamber in the corresponding position at the inlet terminal.

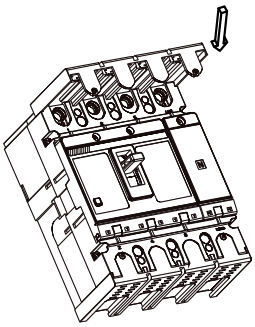

Stp3: Insert the zero flashover shield in the corresponding position at the inlet and outlet terminal.

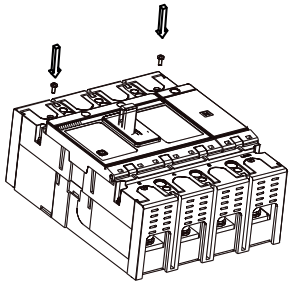

Stp4: Fix the zero flashover shield with screws.

According to the requirements of the protected object, select the circuit breaker with different rated current time, otherwise the correct protection can not be realized.

TEM5 Series Moulded Case Circuit Breaker

Tightening torque table

Model & Spec.	Inlet and outlet terminal screw tightening torque		Torque (N.m)
	Thread spec. (mm)	Torque (N.m)	
TeM5/TeM5L /TeM5DC/TeM5G-125	M8	12	15
TeM5/TeM5L /TeM5DC/TeM5G-250	M8	12	15
TeM5/TeM5L /TeM5DC/TeM5G-400	M10	20	25
TeM5/TeM5L /TeM5DC/TeM5G-630/800	M12	25	30
TeM5E-125/160	M8	10	15
TeM5E-250/320	M8	12	18
TeM5E-400/630	M10	20	25
TeM5E-800	M12	28	33

Notes:

1. It is prohibited to use the method of direct short-circuit between phases to test the instantaneous protection of the circuit breaker, so as not to affect the performance of the product;
2. The overload and short-circuit protection characteristics of the circuit breaker have been set by the manufacturer, and they cannot be adjusted without permission during operation;
3. It is prohibited to use the method of short circuit of the live line to the earth or of short circuit between the live line and the zero line to test the circuit breaker, so as not to affect the performance of the product;
4. In the installation process, if there is less wiring or wrong wiring by the customer, the circuit breaker will not provide current leakage protection.

9 Ordering notice for TEM5 series circuit breaker

Please specify the following when ordering: Product model, specification, number of poles, trip mode and accessory name, protection characteristics, rated current, and order quantity.

For example: To order TEM5-125, four poles, C type, L type breaking capacity power distribution protection circuit breaker, complex release, rated current 100A, a total of 200 units.

Please specify: TEM5-125/4300C 100A 200 units.

If there are special requirements for circuit braker, please contact the manufacturer for determining through negotiation.

TEM5E Series Moulded Case Circuit Breaker

1 Overview

TEM5E series moulded case circuit breaker is one of the new circuit breakers developed by TENGEN with international advanced technology. It is characterized by comprehensive protection, excellent performance and compact size. The circuit breakers are classified into two types according to their rated ultimate short-circuit breaking capacity (Icu): M type (medium breaking type) and H type (high breaking type), which are ideal products for power distribution and motor protection. It is an ideal product for power distribution and motor protection. With rated insulation voltage of 1000V, they are suitable for infrequent switching of circuits and infrequent starting of motors in circuits with AC 50/60Hz, rated working voltage of 690V and below, and rated current from 12.5A to 800A. The circuit breaker can be equipped with optional communication function module, which makes it convenient to upgrade the original circuit breaker to communication type circuit breaker. The circuit breakers have the functions of overload long delay, short-circuit short delay, short-circuit instantaneous, grounding protection, neutral pole protection, etc. The products can be equipped with undervoltage, shunt, auxiliary, alarm and communication accessories. This series of circuit breakers can be installed vertically (i.e. vertical installation) and horizontally (i.e. horizontal installation).
The circuit breakers comply with the standards: IEC 60947-1, IEC 60947-2.

Four-pole product code

Code	Description	Example
A type	N pole is not equpped with an overcurrent trip element, and N pole is always on, and is not open and closed together other three poles	3N300A
B type	N pole is not equpped with an overcurrent trip element, and N pole is always open and closed together other three poles (N pole is first closed and then open)	4300B
C type	N pole is equpped with an overcurrent trip element, and N pole is always open and closed together other three poles (N pole is first closed and then open)	4300C
D type	N pole is equpped with an overcurrent trip element, and N pole is always on, and is not open and closed together other three poles	3N300D

Four-pole product code view

A type: N pole is not equpped with an overcurrent trip element, and N pole is always on, and is not open and closed together other three poles

No overcurrent release

B type: N pole is not equpped with an overcurrent trip element, and N pole is always open and closed together other three poles (N pole is first closed and then open)

No overcurrent release

C type: N pole is equpped with an overcurrent trip element, and N pole is always open and closed together other three poles (N pole is first closed and then open)

With overcurrent release

D type: N pole is equpped with an overcurrent trip element, and N pole is always on, and is not open and closed together other three poles

With overcurrent release

TEM5E Series Moulded Case Circuit Breaker

2 Type Designation

TE M 5 E – 125 □ □ / □ 3 □ □ □ □ □ □ □ □ □ □ □

- Special requirements: Mechanical interlock
- Application scenario
  Default: General application
  Plateau / Damp heat / Environmental protection / Salt spray / Low temperature
- Controller function code
  Conventional type: No code
  E1: Three-button controller
  E2: Current unbalance type controller
  E3: Earthed type controller
  E4: Neutral pole controller
- Zero flashover code
  W: Zero flashover hood
- Installation method
  Default: Fixed type front-panel
  B: Fixed type back-panel
  C: Plug-in type back-panel
  F: Plug-in type front-panel
- Accessory voltage
- Rated current
- Alarm module
  III: Overload alarm without trip
  Default: No this accessory
- N pole code
  A: Three protective poles, the zero line is not disconnected togetehr with otehr poles
  B: Three protective poles, the zero line is disconnected togetehr with otehr poles
  C: Four protective poles, the zero line is disconnected togetehr with otehr poles
  D: Four protective poles, the zero line is not disconnected togetehr with otehr poles
- Purpose
  Default: Power distribution protection
  2: Motor protection
- Internal accessories
  00: No accessory
  10: Shunt release
  20: Aux. contact
  30: Undervoltage release
  40: Shunt + Aux.
  50: Shunt + Undervoltage
  60: Two sets of aux. contacts
  70: Undervoltage + Aux.
  08: Alarm contact
  18: Shunt + Alarm
  28: Aux. + Alarm
  38: Undervoltage + Alarm
  48: Shunt + Alarm + Aux.
  68: Two sets of Aux. + Alarm
  78: Undervoltage + Aux. + Alarm
- Trip mode
  3: Overload + Short circuit
- Number of poles
  3: 3 poles
  3N: 3P+N
  4: 4 poles
- Operation mode
  Default: Direct operation
  Z: Operation via rotary handle
  P: Motor operation
- Breaking capacity
  M: Middle beaking capacity
  H: High breaking capacity
- Frame current
- Derived code: Electronic type
- Design No.
- Product code
- Enterprise code

TEM5E Series Moulded Case Circuit Breaker

3 Technical Parameters

Basic parameters															
Frame rated current Imn		125		160		250		320		400		630		800	
Number of poles		3P, 3P+N, 4P		3P, 3P+N, 4P		3P, 3P+N, 4P		3P, 3P+N, 4P		3P, 3P+N, 4P		3P, 3P+N, 4P		3P, 3P+N, 4P	
Frequency (Hz)		50/60		50/60		50/60		50/60		50/60		50/60		50/60	
Rated operating voltage Ue(V)		380/400/415/660/690		380/400/415/660/690		380/400/415/660/690		380/400/415/660/690		380/400/415/660/690		380/400/415/660/690		380/400/415/660/690	
Rated insulation voltage Ui(V)		1000		1000		1000		1000		1000		1000		1000	
Rated impulse withstand voltage Uimp (kV)		8		8		8		8		12		12		12	
Rated working current In(A)		32AF: 12.5-32A 63AF: 25-63A 125AF: 50-125A		63AF: 25-63A 125AF: 50-125A 160AF: 63-160A		250AF: 100-250A		320AF: 125-320A		400AF: 160-400A		630AF: 250-630A		630AF: 250-630A 800AF: 315-800A	
Breaking capacity		M	H	M	H	M	H	M	H	M	H	M	H	M	H
Rated ultimate short circuit breaking capacity Icu(kA)	AC415V	50	85	50	85	50	85	50	85	70	100	70	100	70	100
	AC690V	10	20	10	20	10	20	10	20	20	30	20	30	20	30
Rated run short circuit breaking capacity Ics(kA)	AC415V	50	50	50	50	50	50	50	50	70	70	70	70	70	70
	AC690V	10	10	10	10	10	10	10	10	20	20	20	20	20	20
Rated short time withstand current Icw(kA/1s)	AC415V	-	-	-	-	-	-	-	-	5	5	8	8	10	10
Isolation function		Yes (3P, 4P)		Yes (3P, 4P)		Yes (3P, 4P)		Yes (3P, 4P)		Yes (3P, 4P)		Yes (3P, 4P)		Yes (3P, 4P)	
Usage category		Class A		Class A		Class A		Class A		Class B		Class B		Class B	
Service life	Mechanical	40000		40000		40000		40000		20000		20000		20000	
	Electrical	8000		8000		8000		8000		7500		7500		7500	
Outline dimensions L*W*H	M, H type 3P (L*W*H)	155*92.5*116		155*92.5*116		165*107*116		180*107*116		257*150*150		257*150*150		280*210*155	
	M, H type 4P (L*W*H)	155*122.5*116		155*122.5*116		165*142*116		180*142*116		257*198*150		257*198*150		280*280*155	
Installation dimensions A*B	M, H type 3P	30*134		30*134		35*126		35*126		44*194		44*194		70*243	
	M, H type 4P	60*134		60*134		70*126		70*126		94*194		94*194		140*243	

Accessory information							
Direct operation via handle	■ (Standard)	■ (Standard)	■ (Standard)	■ (Standard)	■ (Standard)	■ (Standard)	■ (Standard)
Extended rotary handle	□ (Optional)	□ (Optional)	□ (Optional)	□ (Optional)	□ (Optional)	□ (Optional)	□ (Optional)
Motor mechanism	□ (Optional)	□ (Optional)	□ (Optional)	□ (Optional)	□ (Optional)	□ (Optional)	□ (Optional)
Shunt release	□ (Optional)	□ (Optional)	□ (Optional)	□ (Optional)	□ (Optional)	□ (Optional)	□ (Optional)
Undervoltage release	□ (Optional)	□ (Optional)	□ (Optional)	□ (Optional)	□ (Optional)	□ (Optional)	□ (Optional)
Aux. conact	□ (Optional)	□ (Optional)	□ (Optional)	□ (Optional)	□ (Optional)	□ (Optional)	□ (Optional)
Alarm contact	□ (Optional)	□ (Optional)	□ (Optional)	□ (Optional)	□ (Optional)	□ (Optional)	□ (Optional)

TEM5E Series Moulded Case Circuit Breaker

Fixed front-panel	■ (Standard)	■ (Standard)	■ (Standard)	■ (Standard)	■ (Standard)	■ (Standard)	■ (Standard)
Fixed back-panel	□ (Optional)	□ (Optional)	□ (Optional)	□ (Optional)	□ (Optional)	□ (Optional)	□ (Optional)
Plug-in front-panel (not available for 4P product)	□ (Optional)	□ (Optional)	□ (Optional)	□ (Optional)	□ (Optional)	□ (Optional)	□ (Optional)
Plug-in back-panel	□ (Optional)	□ (Optional)	□ (Optional)	□ (Optional)	□ (Optional)	□ (Optional)	□ (Optional)
Transition bar	□ (Optional)	□ (Optional)	□ (Optional)	□ (Optional)	□ (Optional)	□ (Optional)	□ (Optional)
Phase partition	■ (Standard)	■ (Standard)	■ (Standard)	■ (Standard)	■ (Standard)	■ (Standard)	■ (Standard)
Handle lock	□ (Optional)	□ (Optional)	□ (Optional)	□ (Optional)	□ (Optional)	□ (Optional)	□ (Optional)
Zero flashover accessory	□ (Optional)	□ (Optional)	□ (Optional)	□ (Optional)	□ (Optional)	□ (Optional)	□ (Optional)
Mechanical inerlock	□ (Optional)	□ (Optional)	□ (Optional)	□ (Optional))	□ (Optional)	□ (Optional)	□ (Optional)

4 Working and Installation Conditions

- Ambient temperature: The low temperature type is suitable for the -40°C - +70°C environment where the mean value does not exceed +35°C within 24 hours. If below -5°C or higher than 40°C, derating is required.
- Atmosphere conditions: The relative temperature does not exceed 50% at ambient temperature +40°C, and higher relative humidity can be allowed at lower temperatures; for example, when the mean monthly minimum temperature is +25°C, the relative humidity is 90%, considering the condensation that occurs on the surface of the product due to temperature changes.
- Altitude: Suitable for up to 2000 m; if more than 2000 m, the altitude derating is required.
- Installation category: Main circuit: Class III; the installation category of the auxiliary circuit and control circuit not connected to main circuit is Class II.
- Pollution degree: 3
- Use category: See technical parameters table
- Protection grade: IP40 (installed in the small chamber in the cabinet with door frame provided)
- Electromagnetic compatibility: Electromagnetic environment A
- Installation angle: The vertical slope does not exceed 5°

TEM5E Series Moulded Case Circuit Breaker

5 TEM5E Release and Accessory Code

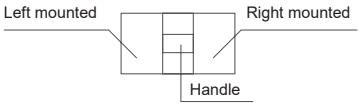

Alarm contact ● Aux. contact ○
Shunt release ■ Undervoltage release ▲

	Accessory code	Accessory installation and lead mode					
Accessory name	Electronic release	TEM5E-125/160		TEM5E-250/320		TEM5E-400 TEM5E-630 TEM5E-800	
No accessory	300						
Alarm contact	308	●	●	●	●	●	●
Shunt release	310	■	■	■	■	■	■
Aux. contact	320	○	○	○	○	○	○
Undervoltage release	330	▲	▲	▲	▲	▲	▲
Shunt release Aux. contact	340	■ ○	○ ■	■ ○	○ ■	■ ○	○ ■
Shunt release Undervoltage release	350	■ ▲	▲ ■	■ ▲	▲ ■	■ ▲	▲ ■
Two sets of aux. contacts	360	○ ○	○ ○	○ ○	○ ○	○ ○	○ ○
Aux. contact Undervoltage release	370	▲ ○	○ ▲	▲ ○	○ ▲	▲ ○	○ ▲
Shunt release Alarm conact	318	■ ●	● ■	■ ●	● ■	■ ●	● ■
Aux. contact Alarm contact	328	● ○	○ ●	● ○	○ ●	● ○	○ ●
Undervoltage release Alarm contaact	338	● ▲	▲ ●	● ▲	▲ ●	● ▲	▲ ●
Shunt release Aux. contact Alarm contact	348	● ○ ■	■ ● ○	● ○ ■	■ ● ○	● ○ ■	■ ● ○
Two sets of aux. contacts Alarm contact	368	● ○ ○	○ ● ○	● ○ ○	○ ● ○	● ○ ○	○ ● ○
Undervoltage release Aux. contact Alarm contact	378	● ○ ▲	▲ ● ○	● ○ ▲	▲ ● ○	● ○ ▲	▲ ● ○

Note: 800 frame product has no right alarm accessory.

TEM5E Series Moulded Case Circuit Breaker

6 Usage type

Power distribution type

The power distribution type TEM5E circuit breaker has no protection code by default, and has overload long delay + short circuit short delay + short circuit instantaneously protection functions, such as optional model is TEM5E – 125M/3300.

Electronic release	Frame rated current Inm (A)	Rated current In (A)	Adjustable overload release current setting value I_R (A)	Trip characteristic / time
Overload long delay	125	32	12.5-14-16-18-20-22-25-28-30-32	Operated according to I^2t $1.05I_R$: No operation within 2 hours $1.3I_R$: Operation within 1 hour Inm<400A $2I_R$: t_R = (12-60-80-100) Inm≥400A $2I_R$:t_R = (12-60-100-150)s Characteristic curve T= $(2*I_R/I)^2*t_R$ ($1.2I_R$≤I<Isd)
		63	25-28-32-36-40-45-50-56-60-63	
		125	50-56-63-70-75-80-90-100-110-125	
	160	63	25-28-32-36-40-45-50-56-60-63	
		125	50-56-63-70-75-80-90-100-110-125	
		160	63-70-80-90-100-110-125-140-150-160	
	250	250	100-110-125-140-150-160-180-200-225-250	
	320	320	125-140-160-180-200-225-250-280-300-320	
	400	400	160-180-200-225-250-280-315-350-375-400	
	630	630	250-280-315-350-375-400-450-500-560-630	
	800	630	250-280-315-350-375-400-450-500-560-630	
		800	315-350-400-450-500-560-630-700-760-800	
Operation tolerance				±20%

Motor protection type

Electronic release	Frame rated current Inm (A)	Rated current In (A)	Adjustable overload release current setting value I_R (A)	Trip characteristic / time
Overload long delay	125	32	12.5-14-16-18-20-22-25-28-30-32	Operated according to I^2t (see Table 1)
		63	25-28-32-36-40-45-50-56-60-63	
		125	50-56-63-70-75-80-90-100-110-125	
	160	63	25-28-32-36-40-45-50-56-60-63	
		125	50-56-63-70-75-80-90-100-110-125	
		160	63-70-80-90-100-110-125-140-150-160	
	250	250	100-110-125-140-150-160-180-200-225-250	
	320	320	125-140-160-180-200-225-250-280-300-320	
	400	400	160-180-200-225-250-280-315-350-375-400	Operated according to I^2t (see Table 2)
	630	630	250-280-315-350-375-400-450-500-560-630	
	800	630	250-280-315-350-375-400-450-500-560-630	
		800	315-350-400-450-500-560-630-700-760-800	
Operation tolerance				±20%

$1.05I_R$	No operation within 2 hours			
$1.2I_R$	Operation within 1 hour			
$1.5I_R$	21.3s	107s	142s	178s
$2I_R$	12s	60s	80s	100s
$7.2I_R$	0.93s	4.63s	6.17s	7.72s
Trip level	/	10A	10	20

TEM5E Series Moulded Case Circuit Breaker

$1.05I_R$	No operation within 2 hours			
$1.2I_R$	Operation within 1 hour			
$1.5I_R$	21.3s	107s	178s	267s
$2I_R$	12s	60s	100s	150s
$7.2I_R$	0.93s	4.63s	7.72s	11.6s
Trip level	/	10	20	30

7 Circuit Protection

Short circuit short delay protection

Electronic release	Frame rated current Inm (A)	Adjustable short circuit short delay current setting value I_{sd} (A)	Trip characteristic / time
Short circuit short delay	Full series	I_{sd}=(2-2.5-3-4-5-6-7-8-10-12)×I_R+OFF	When I_{sd} ≤I < 1.5I_{sd}, the inverse time-delay opeation tolerance is ± 20% Characteristic curve $T=(1.5\times I_{sd}/I)^2\times t_{sd}$ When 1.5I_{sd} ≤I < Ii, the definite time limit is triggerred t_{sd}=0.06s±0.02s; t_{sd}=0.1s±0.03s; t_{sd}=0.2s±0.04s; t_{sd}=0.3s±0.06s;

Short circuit instantaneous protection

Electronic release	Frame rated current Inm (A)	Adjustable short circuit instantaneous trip current setting value I_i (A)	Trip characteristic / time
Short circuit instantaneous	Full series	I_i=(4-6-7-8-10-11-12-13-14)×I_R+OFF	When I ≤ 0.85I_i, no action When I ≥ 1.15I_i, the operation time is < 0.08s
Operation tolerance			±15%

Current unbalance protection

Electronic release	Frame rated current Inm (A)	Adjustable current unbalance protection release current setting value I_{unbal} (A)	Trip characteristic / time
Current unbalance protection	Full series	I_{unbal}=(10-15-20-25-30-35-40-45-50)%×I_R+OFF	When I ≤ 0.9I_{unbal} , no operation When I ≥ 1.1I_{unbal} , operation
Operation tolerance			±15%

Earthing protection – Three-phase current balance type

Electronic release	Frame rated current Inm (A)	Adjustable earthing protection release current setting value I_g (A)	Trip characteristic / time
Earthing protection	Full series	I_g=(0.7-0.75-0.8-0.85-0.9-0.95-1)×I_R+OFF	When I ≤ 1I_g, no operation When I ≥ 1.1I_gg, operation
Operation tolerance			±15%

TEM5E Series Moulded Case Circuit Breaker

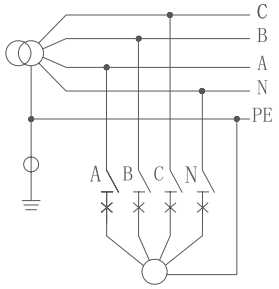

1. Only for TN-S system.
2. The earthing protection is used for load balancing; for unbalance load, this function shall be disenabled or set the constant value more than the allowable unbalance current

Neutral pole protection

Electronic release	Frame rated current Inm (A)	Adjustable neutral pole protection release current setting value I_{RN} (A)	Trip characteristic / time
Neutral pole protection	Full series	I_{RN}=(0.5-1)×I_R+OFF	Inm<400A 2I_{RN}: t_{RN} = (12-60-80-100) Inm≥400A 2I_{RN}:t_{RN} = (12-60-100-150)s Characteristic curve T= $(2*I_{RN}/I)^{2}*t_{RN}$ ($1.2I_{RN}$≤I<Isd)
Operation tolerance			±15%

Overload pre-warning

Electronic release	Frame rated current Inm (A)	Adjustable overload pre-warning protection release current setting value I_g (A)	Trip characteristic / time
Overload pre-warning	Full series	I_p=(0.7-0.75-0.8-0.85-0.9-0.95-1)×I_R+OFF	/

8 Electronic release

Indicator status explanation

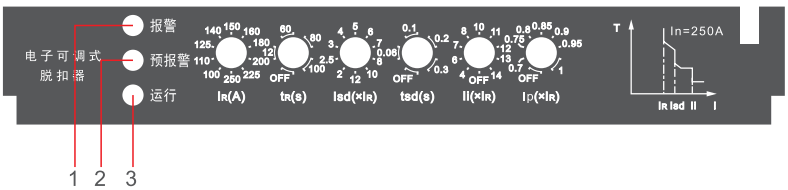

	Indicator description	Indicator run status description
1	Alarm LED indicator (red)	When I > 1.05I_R, the overload alarm indicator is on; when I ≤ 1.0 I_R, the overload alarm indicator is not on ;
2	Prewarning LED indicator (yellow)	When I > 1.1I_p, the prewarning indicator is on; when I ≤ 0.9I_p, the prewarning indicator is not on
3	Run LED indicator (green)	When I > 0.4I_n, the run indicator is flickering (lit once every second); when I≤0.35I_n, the run indicator is flickering slowly (lit once every 2 seconds)

TEM5E Series Moulded Case Circuit Breaker

Three-button intelligent controller (E1 type)

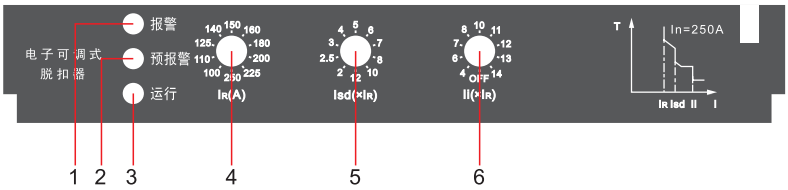

Three-button intelligent controller information		
1	Alarm LED indicator	Default parameters 1 Default setting value of the overload long delay time is t_R = 60s 2 Default setting value of the short circuit short delay time is t_{sd} = 0.3s 3 Default setting value of the overload prewarning current is I_p = 0.9 x I_R
2	Prewarning LED indicator	
3	Run LED indicator	
4	Overload long delay current setting value I_R(A)	
5	Short circuit short delay current setting value I_{sd}(A)	
6	Short circuit instantaneous current setting value I_i(A)	

Prewarning type intelligent controller (conventional type)

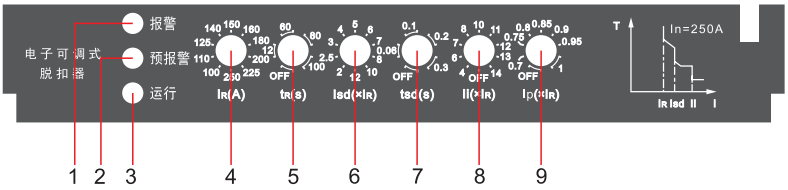

Six-button intelligent controller information		
1	Alarm LED indicator	Default parameters No
2	Prewarning LED indicator	
3	Run LED indicator	
4	Overload long delay current setting value I_R(A)	
5	Overload long delay time setting value t_R(S)	
6	Short circuit short delay current setting value I_{sd}(A)	
7	Short circuit short delay time setting value tsd(s)	
8	Short circuit instantaneous current setting value I_i(A)	
9	Overload prewarning current setting value I_p(A)	

TEM5E Series Moulded Case Circuit Breaker

Current unbalance type intelligent controller (E2 type)

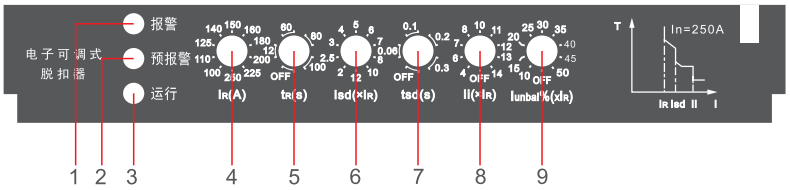

Six-button intelligent controller information		
1	Alarm LED indicator	Default parameters 1. The current unbalance time setting value t_{unbal} = 10s 2. The default setting value of the overload prewarning current is I_p = 0.9 x I_R
2	Prewarning LED indicator	
3	Run LED indicator	
4	Overload long delay current setting value I_R(A)	
5	Overload long delay time setting value t_R(S)	
6	Short circuit short delay current setting value I_{sd}(A)	
7	Short circuit short delay time setting value t_{sd}(s)	
8	Short circuit instantaneous current setting value I_i(A)	
9	Current unbalance setting value I_{unbal}(A)	

Earthing type intelligent controller (E3 type)

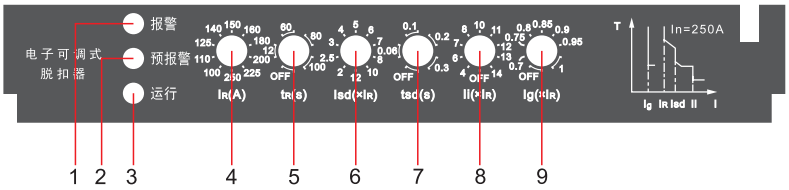

Six-button intelligent controller information		
1	Alarm LED indicator	Default parameters 1. The earthing protection time setting value t_g = 0.4s 2. The default setting value of the overload prewarning current is I_p = 0.9 x I_R
2	Prewarning LED indicator	
3	Run LED indicator	
4	Overload long delay current setting value I_R(A)	
5	Overload long delay time setting value t_R(S)	
6	Short circuit short delay current setting value I_{sd}(A)	
7	Short circuit short delay time setting value t_{sd}(s)	
8	Short circuit instantaneous current setting value I_i(A)	
9	Earthing protection current setting value I_g(A)	

TEM5E Series Moulded Case Circuit Breaker

Neutral pole protection controller (E4 type)

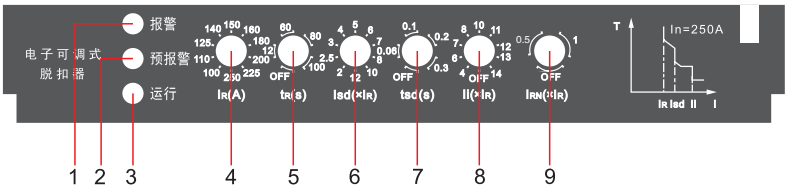

Six-button intelligent controller information		
1	Alarm LED indicator	Default parameters 1. The default setting value of the overload prewarning current is I_p = 0.9 x I_R
2	Prewarning LED indicator	
3	Run LED indicator	
4	Overload long delay current setting value I_R(A)	
5	Overload long delay time setting value t_R(S)	
6	Short circuit short delay current setting value I_{sd}(A)	
7	Short circuit short delay time setting value t_{sd}(s)	
8	Short circuit instantaneous current setting value I_i(A)	
9	Neutral pole protection current setting value I_{RN}(A)	

9 Factory parameters setting of circuit breaker intelligent controller

	Protection type		Power distribution protection		Motor protection
1	Overload long delay	Setting current I_R (A)	In		
2		Delay t_R (s)	60		100
3	Short circuit short delay	Setting current I_{sd} (A)	8 (XI_R)		10(XI_R)
4		Delay t_{sd} (s)	0.3		
5	Short circuit instantaneous	Setting current I_i (A)	Inm≤630A	12 (XI_R)	14(XI_R)
			Inm≥800A	10 (XI_R)	
6 (Prewaring is provided as standard configuration, and others are optional)	Prewarnging	Setting current I_P (A)	0.9 (XI_R)		
	Current unbalance protection	Setting current	50% (XI_R)		
	Earthing protection	Setting current I_g (A)	Off		
	Neutral pole protection	Setting current I_{RN} (A)	Off		
Thermal simulation function		Off			

TEM5E Series Moulded Case Circuit Breaker

10 Protection characteristic

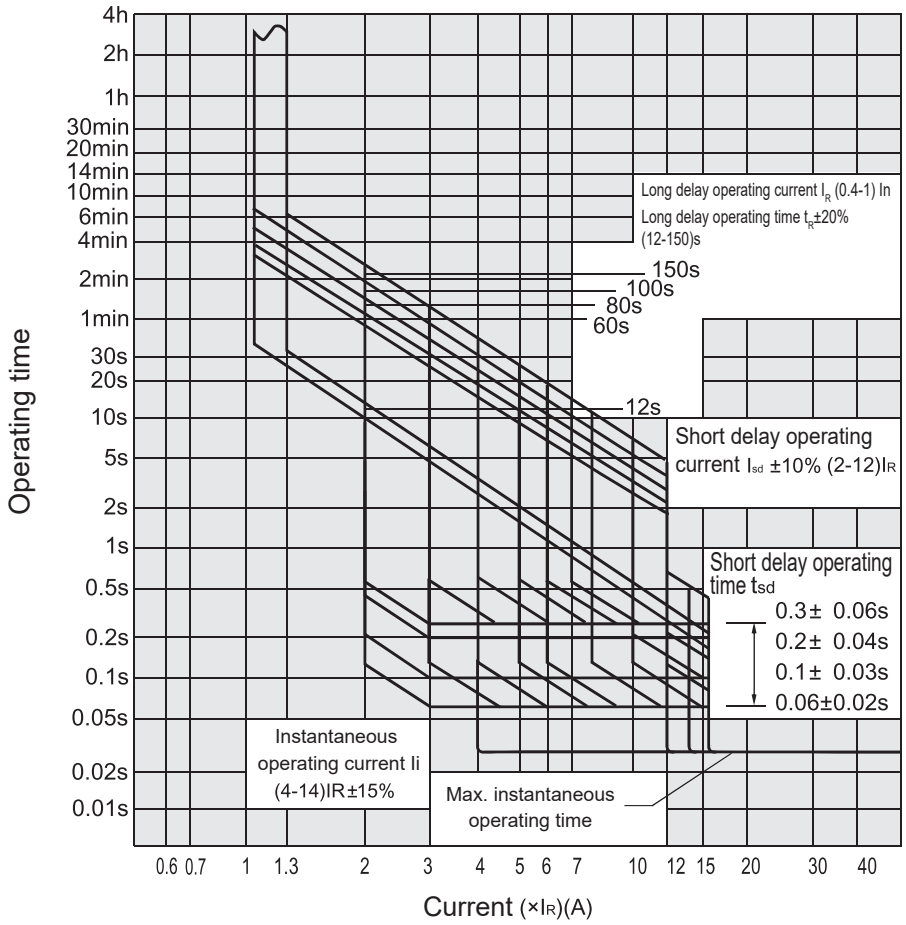

TEM5E Series Moulded Case Circuit Breaker

11 Outline and installation dimensions

Outline and installation dimensions of the product (non-zero flashover)

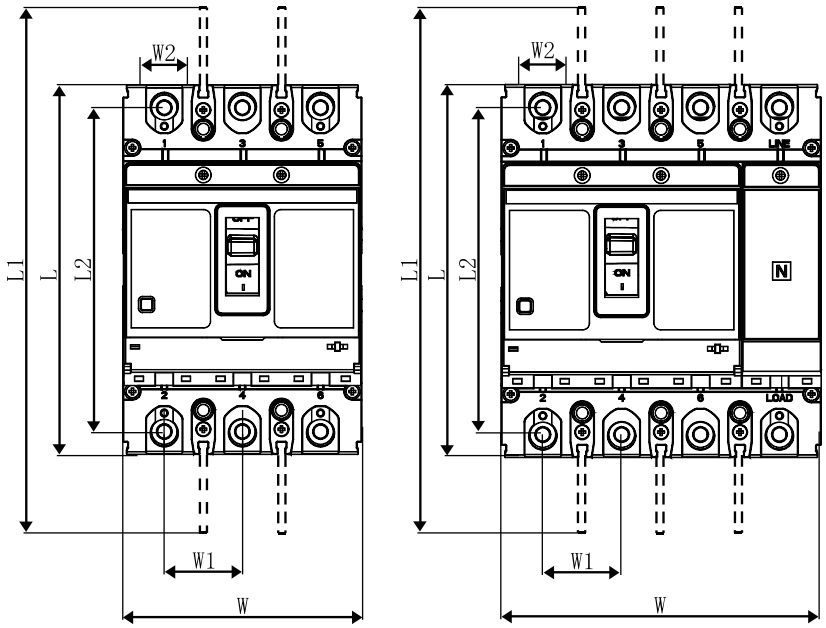

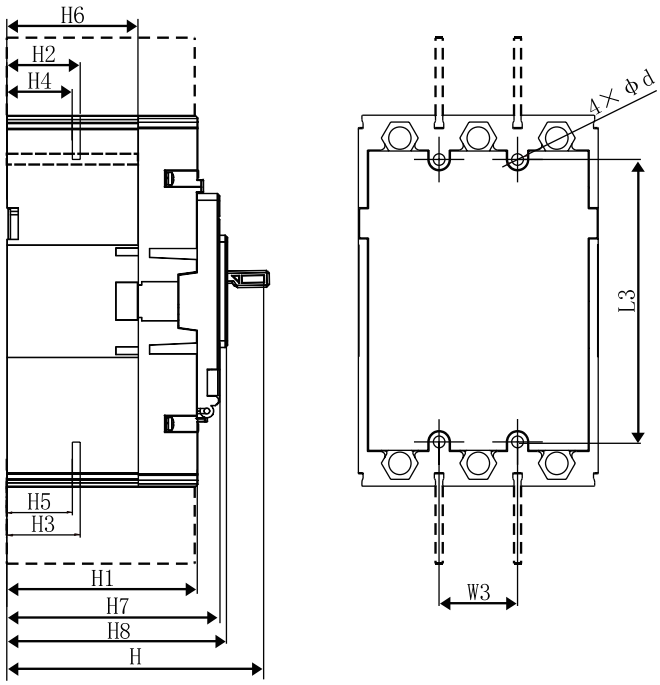

Note: The part marked in the dash line is zero flashover hood.

TEM5E Series Moulded Case Circuit Breaker

Outline and installation dimensions of the product (zero flashover)

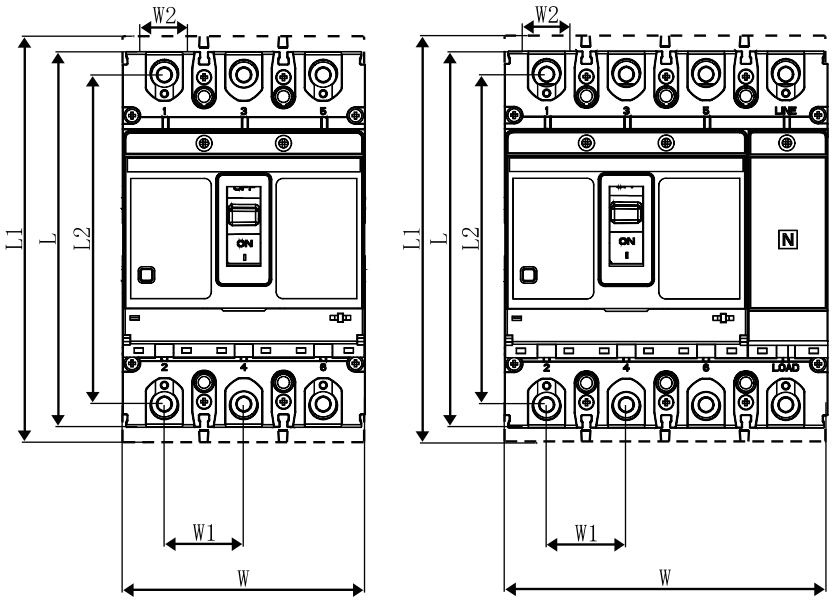

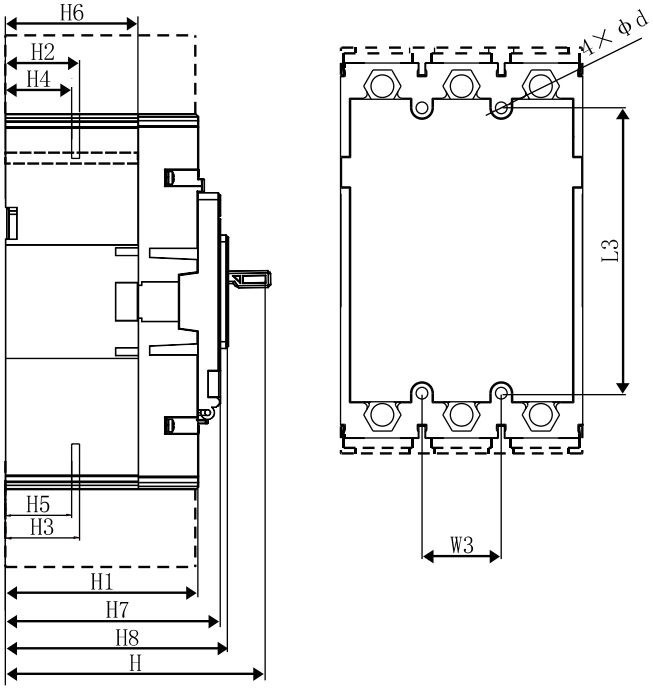

Note: The part marked in the dash line is zero flashover hood.

TEM5E Series Moulded Case Circuit Breaker

Model	Number of poles	Outline dimensions (mm)														Installation dimensions (mm)				
		L	L1		W	W1	W2	H	H1	H2	H3	H4	H5	H7	H8	L2	L3	W3	H6[1]	Φd
			Non-zero flashover	Zero flashover																
TEM5E-125M	3	155	250	169	92.5	30	18	116	82	28.5	28.5	25.5	25.5	96	100	137	134	30	25	4.5
	4				122.5													60		
TEM5E-125H	3				92.5													30		
	4				122.5													60		
TEM5E-160M	3	155	250	169	92.5	30	18	116	82	28.5	28.5	25.5	25.5	96	100	137	134	30	25	4.5
	4				122.5													60		
TEM5E-160H	3				92.5													30		
	4				122.5													60		
TEM5E-250M	3	165	300	180	107	35	24	116	85	22.5	22.5	18.5	18.5	95	98.5	146	126	35	60.5	4.5
	4				142													70		
TEM5E-250H	3				107													35		
	4				142													70		
TEM5E-320M	3	165	300	180	107	35	24	116	85	22.5	22.5	18.5	18.5	95	98.5	146	126	35	60.5	4.5
	4				142													70		
TEM5E-320H	3				107													35		
	4				142													70		
TEM5E-400M	3	257	471	285	150	48	33	150	100	39.5	38.5	34.5	35.3	111	115	224	194	44	47	7
	4				198													94		
TEM5E-400H	3				150													44		
	4				198													94		
TEM5E-630M	3	257	471	285	150	48	33	150	100	40.5	41.5	34.5	35.3	111	115	224	194	44	47	7
	4				198													94		
TEM5E-630H	3				150													44		
	4				198													94		
TEM5E-800M	3	280	494	303	210	70	45	155	103	42	46	36	39	115	120	243	243	70	70	7
	4				280													140		
TEM5E-800H	3				210													70		
	4				280													140		

Note: To install the external-hung accessories, a 22mm installation space shall be reserved on each side of the product.

TEM5E Series Moulded Case Circuit Breaker

Outline dimensions of TEM5E electronic accessories

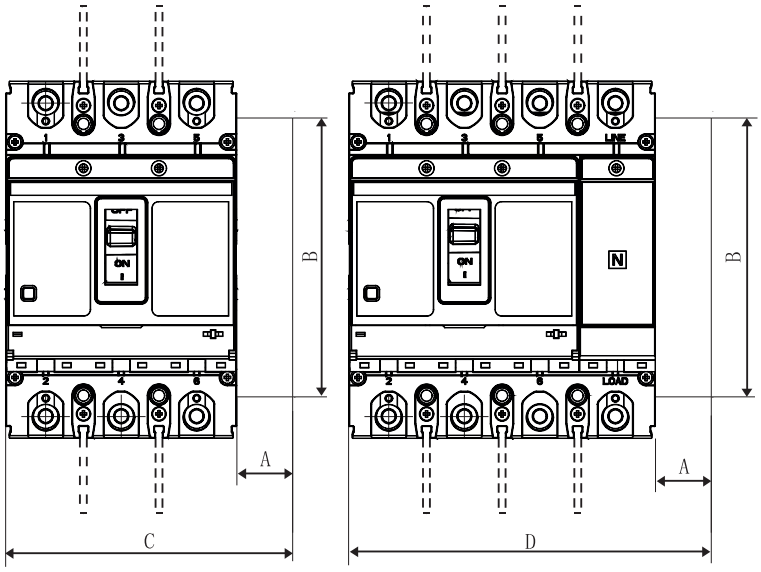

Model	Outline dimensions of accessory			
	A	B	C	D
TEM5E-125/160	25	125	117.5	147.5
TEM5E-250/320	25	125	132	167
TEM5E-400/630	25	125	175	223
TEM5E-800	25	125	235	305

TEM5E Series Moulded Case Circuit Breaker

Outline and installation dimensions of TEM5E plug-in type

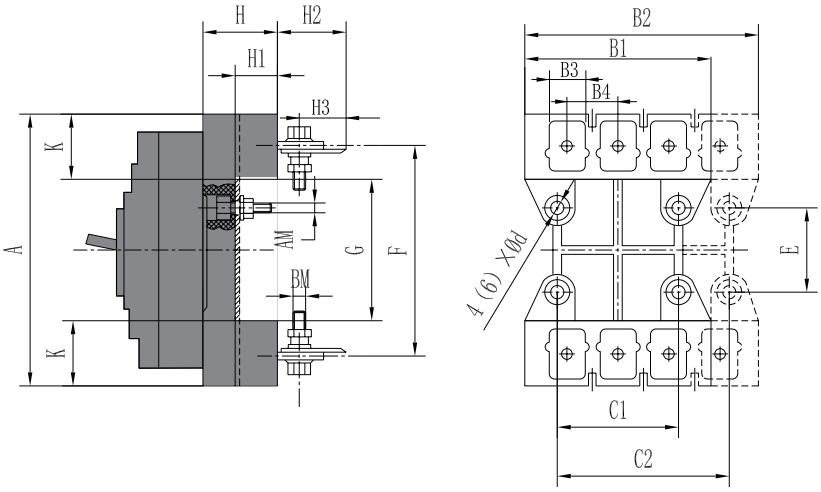

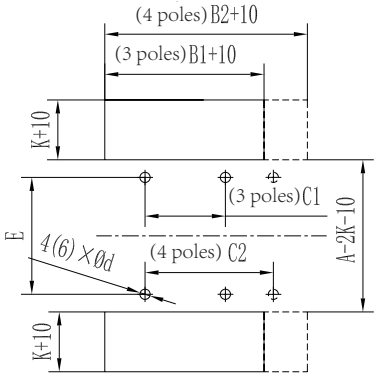

Size of hole on the mounting plate (unit: mm)

Model	Outline and installation dimensions (mm)																	
	A	B1	B2	B3	B4	C1	C2	E	F	G	K	H	H1	H2	H3	AM	BM	ϕd
TEM5E-125/160	173	91	125	20	30	60	90	62	137	97	38	53	33	28	15	M6	M8	6.5
TEM5E-250/320	186	107	145	22	34	70	105	54	145	94	46	50	33	37	18	M6	M8	6.5
TEM5E-400/630	280	149	200	31	48	60	108	129	224	170	55	60	38	46	22	M8	M12	8.5
TEM5E-800	305	210	280	/	71	90	162	146	242	181	62	87	60	22	/	M10	M14	11

TEM5E Series Moulded Case Circuit Breaker

12 Ordering notice

When ordering, please specify: product model, specification, number of poles, accessory name, protection characteristics, rated current, and order quantity.

For example: Order TEM5E-125 circuit breaker with three poles and M type breaking capacity used in the power distribution protection, rated current 125A, 200 units.

Please specify: TEM5E-125M/3300 125A (63-125)A adjustable 200 units.

If you have special requirements for circuit breakers, please contact the manufacturer for this through negotiation.

TEM7E Series Moulded Case Circuit Breaker

1 Overview

TEM7 series moulded case circuit breaker (hereinafter referred to as circuit breaker) is the latest fourth-generation circuit breaker product researched and developed by the company through integrating top design designers at home and abroad and introducing a simulation design platform, and adopting a series of advanced technologies such as the world's most advanced rotary double-break technology, the contact opening and locking technology, the energy rapid tripping technology, and the air blowing and magnetic blowing technology.

The product has a high degree of modularization and its accessories are box-mounted. It is characterized Small volume, high breaking capacity, high current limiting, zero arcing, full selectivity, and green environmental protection.

International standards:

- IEC 60947-1: General Provisions
- IEC 60947-2: Circuit breakers
- IEC 60947-4: Contactors and motor starters

High performance

High-performance electronic moulded case circuit breaker TEM7E-125/160/250/400/630

- With coordinated tripping system, it can quickly break the extremely large short circuit current within 5ms
- The use of the double-coil transformer guarantees a current accuracy of up to 0.5%, a voltage accuracy of 0.5%, and a power accuracy of up to 1%
- With convenient communication, the remote signaling, remote control, remote regulation and remote metering can be realized.

High breaking

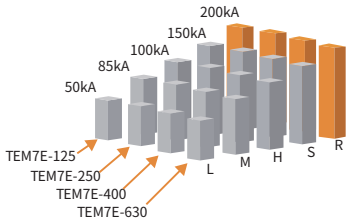

TEM7E series moluded case circuit breaker AC400V
Breaking grade staircase chart

For each circuit breaker model, there are multiple breaking capacities, which is up to 200kA, so as to meet the various protection needs of customers:

- Standard application: Standard type (L)
  It is used in civil housing, buildings, public buildings and industrial plants
- Applications requiring high performance: (High breaking type: M and H)
  It is used in industrial production lines and critical power equipment.
- Special applications: Current limiting type (S & R)
  It is used in heavy industry and special industry.

TEM7E Series Moulded Case Circuit Breaker

2 Type Designation

TE M 7 E – □ □□/ □□□□□□□□□□□

- Special requirements
- Application code:
  Default: General
  GY: Plateau
  SR: Damp heat
  HB: Environmental protection
  YW: Salt spray
  GW High temperature
  DW Low temperature
- Installation method code:
  Default fixed type front-panel
  F: Plug-in type front-panel
  C: Plug-in type back-panel
  D: Draw-out type back-panel
  Q: Draw-out type front-panel
- Accessory voltage: Default AC400V / AC230V / AC110V / AC48V / DC220V / DC110V / DC48V / DC24V
- Controller type: E1-E5, E2 by default
- Rated current
- N-pole code: only available for 4-pole
  A-N pole without overcurrent protection, always powered-on
  B-N pole without overcurrent protection, N pole is turned on and off together with other three poles
  C-N pole with overcurrent protection, N pole is turned on and off together with other three poles
  D-N pole with overcurrent protection N pole is always powered-on
- Application code: Power distribution
  Motor protection: 2
- Accessory code
- Release type:
  2 – Instantaneous release
  3 – Complex release
- Number of poles: 3P 4P
- Operation mode:
  Direct operation via handle
  Operation via motor: P
  Operation via rotary handle: Z
- Breaking capacity:
  L – Standard type
  M – Medium breaking capacity
  H – High breaking capacity
  S – Super-high breaking capacity
  R-Extreme-high breaking capacity
- Frame rated current
- Derived code
- Design code
- Moulded case circuit breaker
- Enterprise code

TEM7E Series Moulded Case Circuit Breaker

3 Technical Parameters

Basic parameters																											
Frame rated current Inm (A)			125					160					250					400					630				
Number of poles			3P, 4P					3P, 4P					3P, 4P					3P, 4P					3P, 4P				
Rated operating voltage Ue (V)			AC380/400/415, AC500/550, AC660/690					AC380/400/415, AC500/550, AC660/690					AC380/400/415, AC500/550, AC660/690					AC380/400/415, AC500/550, AC660/690					AC380/400/415, AC500/550, AC660/690				
Rated insulation voltage Ui (V)			800					800					800					1000					1000				
Rated withstand impulse voltage Uimp (kV)			8					8					8					12					12				
Short-time withstand current Icw (KA/s)			-					-					-					6kA 1s					8kA 1s				
Rated frequency Hz			50/60					50/60					50/60					50/60					50/60				
Rated current In (A)			50, 56, 63, 70, 75, 80, 90, 100, 112, 125					63, 70, 75, 80, 90, 100, 112, 125, 140, 160					100, 112, 125, 140, 150, 160, 180, 200, 225, 250					160, 180, 200, 225, 250, 280, 315, 350, 375, 400					250, 280, 315, 350, 375, 400, 450, 500, 560, 630				
Breaking capacity			L	M	H	S	R	L	M	H	S	R	L	M	H	S	R	L	M	H	S	R	L	M	H	S	R
Icu	AC380/400/415V		50	85	100	150	160	50	85	100	150	160	50	85	100	150	160	50	85	100	150	200	50	85	100	150	200
	AC500/550V		50	50	70	70	85	50	50	70	70	85	50	50	70	70	85	50	50	70	70	85	50	50	70	70	85
	AC660/690		20	20	40	40	80	20	20	40	40	80	20	20	40	40	80	20	20	40	40	80	20	20	40	40	80
Ics (%Icu) (kA)	AC380/400/415V		100%					100%					100%					100%					100%				
	AC500/550V		100%					100%					100%					100%					100%				
	AC660/690		100%					100%					100%					100%					100%				
Isolation function			Yes (3P, 4P)					Yes (3P, 4P)					Yes (3P, 4P)					Yes (3P, 4P)					Yes (3P, 4P)				
Usage category			Class A					Class A					Class A					Class B					Class B				
Operational performance (Times)	Mechanical life		20000					20000					20000					15000					15000				
	Electrical life	AC380/400/415V	18000					18000					10000					7500					7500				
		AC500/550V	/					/					/					5000					3500				
		AC660/690V	8000					8000					4000					3000					2000				
Flashover distance (mm)			0					0					0					0					0				
Accessory information																											
Direct operation via handle			■ (Standard)					■ (Standard)					■ (Standard)					■ (Standard)					■ (Standard)				
Extended rotary handle			□ (Optional)					□ (Optional)					□ (Optional)					□ (Optional)					□ (Optional)				
Motor mechanism			□ (Optional)					□ (Optional)					□ (Optional)					□ (Optional)					□ (Optional)				
Fixed type front-panel			■ (Standard)					■ (Standard)					■ (Standard)					■ (Standard)					■ (Standard)				
Plug-in type front-panel			□ (Optional)					□ (Optional)					□ (Optional)					□ (Optional)					□ (Optional)				
Plug-in type back-panel			□ (Optional)					□ (Optional)					□ (Optional)					□ (Optional)					□ (Optional)				
Pull-out type			-					-					-					□ (Optional)					□ (Optional)				
Transition bar			□ (Optional)					□ (Optional)					□ (Optional)					□ (Optional)					□ (Optional)				
Phase partition			■ (Standard)					■ (Standard)					■ (Standard)					■ (Standard)					■ (Standard)				
Terminal cover			□ (Optional)					□ (Optional)					□ (Optional)					□ (Optional)					□ (Optional)				
Outline dimensions: L*W*H																											
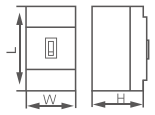			161×105×88					161×105×88					161×105×88					255×140×110					255×140×110				
			161×140×88					161×140×88					161×140×88					255×185×110					255×185×110				

TEM7E Series Moulded Case Circuit Breaker

4 Controller Functions Configuration Table

4.1 Power distribution protection

Release type Functions				Knob economic type		Knob basic type		Knob + LCD basic type		Knob + LCD communi-caiton type		Knob + LCD power type	
				3P	4P	3P	4P	3P	4P	3P	4P	3P	4P
Power distribution protection	Basic protection		Overload long delay protection	√		√		√		√		√	
			Short-circuit short delay protection	√		√		√		√		√	
			Short-circuit instantaneous protection	√		√		√		√		√	
			MCR protection (not disenabled)	√		√		√		√		√	
	Additional protection		Earth fault protection	×		○		√		√		√	
			Neutral protection	×	×	×	○	×	√	×	√	×	√
			Current three-phase unbalance protection	×		○		√		√		√	
			Overvoltage protection	×		×		×		×		√	
	Aux. protection function		Overload pre-warning	√		√		√		√		√	
			Thermal memory	√		√		√		√		√	
Measurement function	Current measurement		Current ABCN per pole	×		×		√		√		√	
			Earth current	×		×		√		√		√	
			Three-phase current unbalance	×		×		√		√		√	
	Voltage measurement		Line voltage UAB\UBC\UCA Line voltage unbalance	×		×		×		×		√	
			Phase voltage UAN\UBN\UCN Phase voltage unbalance	×		×		×		×		√	
	Power measurement		Active power, reactive power, apparent power, power factor	×		×		×		×		√	
	Electric energy measurement		Active energy, reactive energy, apparent energy	×		×		×		×		√	
	Demand value measurement		Demand current	×		×		×		×		√	
			Demand power	×		×		×		×		√	
	Frequency measurement			×		×		×		×		√	
	Total harmonic distortion measurement		THDi	×		×		×		×		√	
			THDu	×		×		×		×		√	
	Phase sequence measurement		Positive sequence, reverse sequence	×		×		×		×		√	
Historical records	Historical max. and min. (communication output)		Historical max. and min. current	×		×		×		√		√	
			Historical max. and min. voltage	×		×		×		×		√	
			Max. value and min. values of power factor	×		×		×		×		√	
			Max. and min. frequency	×		×		×		×		√	
			Max. demand value	×		×		×		×		√	
	Fault memory		Last 20 times (LCD display)	×		×		√		√		√	
			Last 20 times (communication output)	×		×		×		√		√	
Dispaly function	LCD display including but not limited those	Fault information display	Type, fault current value, and operation time of the last fault	×		×		√		√		√	
		Real-time current value display	Same as the current measurement information	×		×		√		√		√	
		Real-time volage value display	Same as the voltage measurement information	×		×		×		×		√	
		Real-time power value display	Same as the power measurement information	×		×		×		×		√	
	LED indicator	Work state	Green	√		√		√		√		√	
		Overload state	Yellow	√		√		√		√		√	
		Fault indiator	Red	√		√		√		√		√	
Communication function	Body isolation communication		MODBUS-RTU protocol	×		×		×		√		√	
	Bluetooth, wifi communication (USB port)		Meet the needs of TENGEN smart APP	×		×		×		□		□	

1) √ Basic function ○ Optional function × No function □ Reserved connection and space for the internal circuit board of the controller;
2) Earthing protection: Difference type;
3) USB data interface: Non-standard USB interface, only used to connect external Bluetooth module or wifi module.

TEM7E Series Moulded Case Circuit Breaker

4.2 Motor Protection

Release type Functions				Knob economic type		Knob basic type		Knob + LCD basic type		Knob + LCD communi-caiton type		Knob + LCD power type	
				3P	4P	3P	4P	3P	4P	3P	4P	3P	4P
Motor protection	Basic protection		Overload long delay protection	√		√		√		√		√	
			Instantaneous protection	√		√		√		√		√	
			Stall protection	√		√		√		√		√	
			MCR protection (not disenabled)	√		√		√		√		√	
	Additional protection		Current three-phase unbalance protection/phase loss	×		○		√		√		√	
			Startup timeout protection	×		○		√		√		√	
			Low load protection	×		○		√		√		√	
			Earth fault protection	×		○		√		√		√	
			Neutral line protection	×	×	×	○	×	√	×	√	×	√
			Overvoltage protecion	×		×		×		×		√	
	Aux. protection function		Overload pre-warning	√		√		√		√		√	
			Thermal memory	√		√		√		√		√	
Measurement function	Current measurement		Current ABCN per pole	×		×		√		√		√	
			Earth current	×		×		√		√		√	
			Three-phase current unbalance	×		×		√		√		√	
	Voltage measurement		Line voltage UAB\UBC\UCA Line voltage unbalance	×		×		×		×		√	
			Phase voltage UAN\UBN\UCN Phase voltage unbalance	×		×		×		×		√	
	Power measurement		Active power, reactive power, apparent power, power factor	×		×		×		×		√	
	Electric energy measurement		Active energy, reactive energy, apparent energy	×		×		×		×		√	
	Demand value measurement		Demand current	×		×		×		×		√	
			Demand power	×		×		×		×		√	
	Frequency measurement			×		×		×		×		√	
	Total harmonic distortion measurement		THDi	×		×		×		×		√	
			THDu	×		×		×		×		√	
	Phase sequence measurement		Positive sequence, reverse sequence	×		×		×		×		√	
Historical records	Historical max. and min. (communication output)		Historical max. and min. current	×		×		×		√		√	
			Historical max. and min. voltage	×		×		×		×		√	
			Max. value and min. values of power factor	×		×		×		×		√	
			Max. and min. frequency	×		×		×		×		√	
			Max. demand value	×		×		×		×		√	
	Fault memory		Last 20 times (LCD display)	×		×		√		√		√	
			Last 20 times (communication output)	×		×		×		√		√	
Dispaly function	LCD display including but not limited those	Fault information display	Type, fault current value, and operation time of the last fault	×		×		√		√		√	
		Real-time current value display	Same as the current measurement information	×		×		√		√		√	
		Real-time volage value display	Same as the voltage measurement information	×		×		×		×		√	
		Real-time power value display	Same as the power measurement information	×		×		×		×		√	
	LED indicator	Work state	Green	√		√		√		√		√	
		Overload state	Yellow	√		√		√		√		√	
		Fault indiator	Red	√		√		√		√		√	
Communication function	Body isolation communication		MODBUS-RTU protocol	×		×		×		√		√	
	Bluetooth, wifi communication (USB port)		Meet the needs of TENGEN smart APP	×		×		×		□		□	

1) √ Basic function ○ Optional function × No function □ Reserved connection and space for the internal circuit board of the controller;
2) Earthing protection: Difference type;
3) USB data interface: Non-standard USB interface, only used to connect external Bluetooth module or wifi module.

TEM7E Series Moulded Case Circuit Breaker

4.3 Power Distribution Protection

E1 trip unit: Knob economic type	Three knobs
E2 trip unit: Knob basic type	Default: Prewarning E21 (neutral line protection), E22 (earthing protection), E23 (three-phase unbalance)
E3 trip unit: Knob + LCD basic type	Intelligent trip unit
E4 trip unit: Knob + LCD communicaiton type	Intelligent trip unit
E5 trip unit: Knob + LCD power type	Intelligent trip unit

4.4 Motor protection

EM1 trip unit: Knob economic type	Three knobs
EM2 trip unit: Knob basic type	Default: Prewarning EM21 (neutral line protection), EM22 (earthing protection), EM23 (three-phase unbalance), EM24 (low load), EM25 (long start)
EM3 trip unit: Knob + LCD basic type	Intelligent trip unit
EM4 trip unit: Knob + LCD communicaiton type	Intelligent trip unit
EM5 trip unit: Knob + LCD power type	Intelligent trip unit

5 TeM7E Trip Unit

5.1 Type E Electronic Trip Unit

The TeM7E can provide a series of interchangeable electronic trip units. The E4 electronic trip unit can provide the communication function. The E5 electronic trip unit can provide various power parameter measurement and communication functions. TeM7E provides power information to manage power parameters and optimize usage of electrical energy.

E1

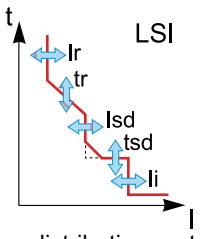

Power distribution protection

E2/E3/E4/E5

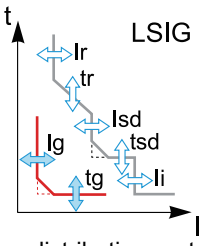

Power distribution protection
G protection of the E2 type electronic trip unit is optional

EM1

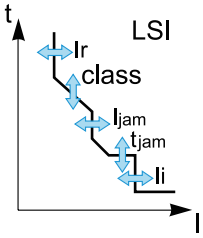

Motor protection

EM2/EM3/EM4/EM5

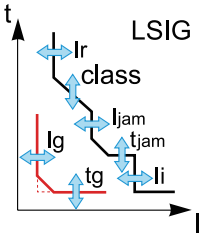

Motor protection
G protection of the EM2 type electronic trip unit is optional

TEM7E Series Moulded Case Circuit Breaker

5.1.1 Front side of trip unit

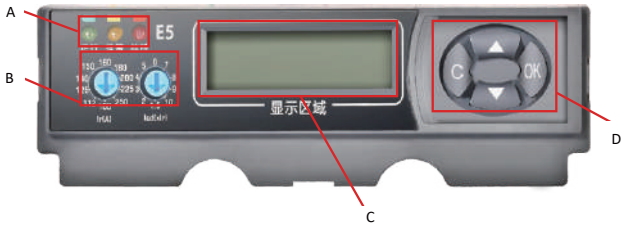

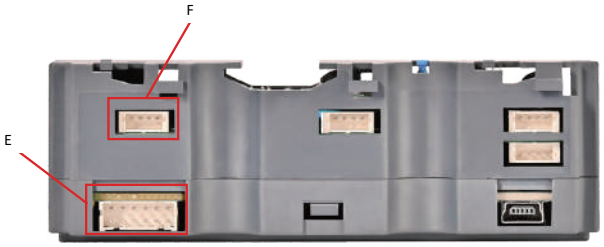

A. LED indicator
B. Knob for presetting the protection function
C. LCD display
D. Navigation keyboard
E. Communication and test port
F. USB programmer interface
G. Trip wiring port

5.1.2 Navigation keyboard

4-key keyboard is used for navigation.

"C" key (return key): Return to the previous menu when in the non-editing state; exit the editing state when in the editing state.

"▲" key (up key): Switch the interface up when in the non-editing state; add the current data when in the editing state.

"▼" key (down key): Switch the interface down when in the non-editing state; subtract the current data when in the editing state.

"OK" key (confirm key): Enter the next menu or the editing state when in the non-editing state; save the current data and exit the editing state when in the editing state.

TEM7E Series Moulded Case Circuit Breaker

5.2 Communication and Test Port

Communication Port

It supports RS485 communication with isolation function, and can realize remote metering, remote control, and remote communication data transmission functions. It can realize the remote control function with special motor mechanism, and the remote control output adopts optocoupler output. The Modbus-RTU protocol communication format is used.

Communication protocol	Modbus
Communication address	1~255, 0 means broadcast address
Baud rate (bit/S)	2.4k, 4.8k, 9.6k, 19.2k, 38.4k, 57.6k, 76.8k, 115.2k

The E-Series trip unit has test ports dedicated to maintenance operations.

The test port can be used to connect a handheld programmer to perform local testing, fault query, parameter setting, power parameter calibration on the E-series trip unit.

Circuit breaker communication interface

5.2.1 Communication interface

Communication and test port diagram

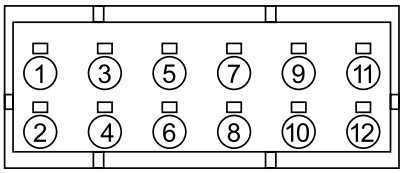

Communication and test port

Terminal	Function
1	Programmer communiction
2	Internal use
3	Programmer communiction
4	External use
5	Conencted to the external DC24V(+)
6	Programmer input +5V
7	Breaking contact
8	Conencted to the external DC24V(-)
9	Closing contact
10	RS485B
11	Breaking and closing the common terminal
12	RS485A

5.2.2 Trip wiring port

Trip wiring port diagram

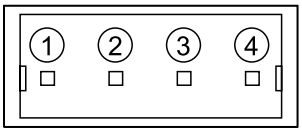

Trip alarm terminal

Terminal	Function
1	Switch state input + (dry contact)
2	Switch state input - (dry contact)
3	Trip +
4	Trip -

5.2.3 USB programmer communication port

USB programmer communication port diagram

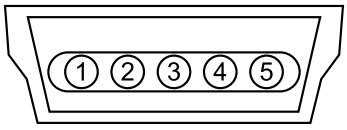

Communication port functions

Terminal	Function
1	+5V
2	TXD
3	RXD
4	Empty
5	GND

5.2.4 4. Special communication cable

The standard length of the special communication cable is 0.5m, which can be customized.

Body port (for connection of circuit breaker)

Note: The communication type circuit breaker shall be connected to the external DC24V power supply, and polarity shall be checked, otherwise the communication cannot be conducted. No short circuit between the terminals is allowed, otherwise this may cause damage.

5.3 Connection between the communication interface and the motor mechanism

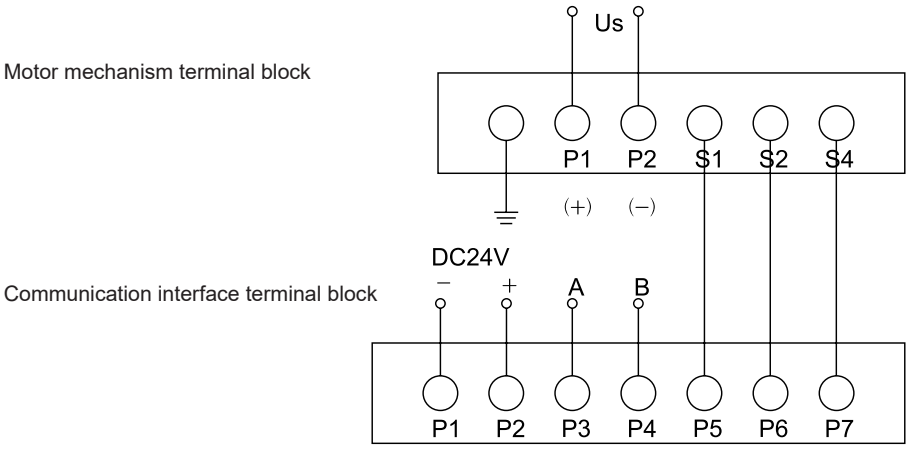

5.4 Display backlight

When the E-Series trip unit is powered by an external 24VDC power supply, the backlight of the trip unit display is white, and the backlit:

lights up for 1 minute when one of the keys on the keyboard is pressed for it is powered by 24V.

5.5 Power supply of E series trip unit

External DC24V power supply

DC24V power supply can maintain the functional operation of the E-Series trip unit in all conditions, including low load conditions (the load is below 20%).

TEM7E Series Moulded Case Circuit Breaker

6 Example of the use of knob to set the protection functions

The settings of the long-delay protection current, short-delay protection current, earthing protection current shall require knob, and the key can be used to intelligently fine-tune the current.

The keys can be used for fine turning range from the maximum value defined by the knob setting to the current of the adjacent smaller gear in 1A increment. For example, for In=250A product, the knob setting value is 200A, and the key can be used for fine tune ranged 180-200A; when the knob is set to min. value gear or OFF gear, no any adjustment is allowed.

Step	Opeartion	Use	Dispaly
1	Set the Ir knob to 250	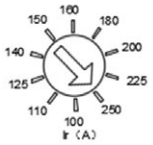	保护设定→过载长延时 Ir = 250A
2	If the current setting value is inappropirate, please set the exact value required by Ir on the key: Press OK key, and then press the Down key.	OK ▼	保护设定→过载长延时 Ir = 245 A
3	Confirm the settings	OK	保护设定→过载长延时 Ir = 245A

6.1 Example of the use of key to set the protection functions

Step	Opeartion	Use	Dispaly
1	Boot interface		天 正 电 气
2	Delayed enter the default interface, and press the "Up" and "Down" keys to switch the measurement information	▼ ▲	Ia:0A Ib:0A Ic:0A Id:0A
3	Press the "OK" key in the default menu to enter the main menu, and press the "Up" and "Down" keys to switch contents	OK ▼ ▲	主 菜 单 ▶保护设定 历史记录
4	Press the "OK" key in the main menu to enter the overload long delay setting, press the "Up" key to return to the previous level, and press the "C" key to return to the main menu	OK C ▲	保护设定→过载长延时 Ir = 245A

TEM7E Series Moulded Case Circuit Breaker

Step	Opeartion	Use	Dispaly
5	Press the "Down" key to enter the overload long delay time setting, press the "Up" key to return to the previous level, and press the "C" key to return to the main menu	C	保护设定→过载长延时 Ir = OFF
6	Press the "Down" key to enter the overload long-delay thermal memory setting, press the "Up" key to return to the previous level, and press the "C" key to return to the main menu	C	保护设定→过载长延时 长延时热记忆 OFF
7	Press the "Down" key to enter the short-circuit short-delay setting, press the "Up" key to return to the previous level, and press the "C" key to return to the main menu	C	保护设定→短路短延时 Isd = 2.0Ir
8	Press the "Down" key to enter the short-circuit short-delay time setting to set the definite time and inverse time; press the "Up" key to return to the previous level, and press the "C" key to return to the main menu	C	保护设定→短路短延时 tsd = 0.20s 定时限
9	Press the "Down" key to enter the short-circuit short-delay thermal memory setting, press the "Up" key to return to the previous level, and press the "C" key to return to the main menu	C	保护设定→短路短延时 短延时热记忆 OFF
10	Press the "Down" key to enter the short circuit instantaneous setting, press the "Up" key to return to the previous level, and press the "C" key to return to the main menu	C	保护设定→短路瞬时 Ii = 12Ir
11	Press the "Down" key to enter the earthing protection setting, press the "Up" key to return to the previous level, and press the "C" key to return to the main menu	C	保护设定→接地 Ig = 0.2In
12	Press the "Down" key to enter the earthing protection time setting, press the "Up" key to return to the previous level, and press the "C" key to return to the main menu	C	保护设定→接地 tg = 0.4s@6Ig

TEM7E Series Moulded Case Circuit Breaker

Step	Opeartion	Use	Dispaly
13	Press the "Down" key to enter the prewarning setting, press the "Up" key to return to the previous level, and press the "C" key to return to the main menu	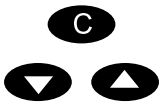	保护设定→接地 Ip = 0.90Ir
14	Press the "Down" key to enter the neutral line protection setting, press the "Up" key to return to the previous level, and press the "C" key to return to the main menu	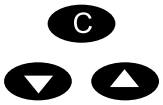	保护设定→中性线保护 Netral = 100%
15	Press the "Down" key to enter the current unbalance protection setting, press the "Up" key to return to the previous level, and press the "C" key to return to the main menu	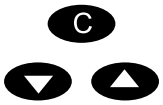	保护设定→电流不平衡 Iunbal = 60%
16	Press the "Down" key to enter the current unbalance time setting, press the "Up" key to return to the previous level, and press the "C" key to return to the main menu	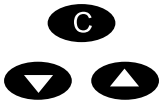	保护设定→电流不平衡 tunbal = 4s
17	Press the "Down" key to enter the overvoltage protection setting, press the "Up" key to return to the previous level, and press the "C" key to return to the main menu	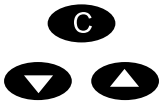	保护设定→过电压 Uover = 450V
18	Press the "Down" key to enter the overvoltage tiem setting, press the "Up" key to return to the previous level, and press the "C" key to return to the main menu	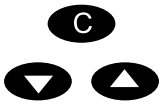	保护设定→过电压 tover = 7.1s

6.2 View via key / set historical records, communication parameters, and clock settings

Step	Opeartion	Use	Dispaly
1	Press the "Down" key in the main menu to select the history records	▼	主 菜 单 保护设定 ▶历史记录
2	Press the "OK" key in the main menu to enter the history records, and press the "Up" and "Down" keys to query the fault type and time	OK ▼ ▲	历史记录→短路短延时 00 19-09-09 19:44:32
3	Press the "C" key to return to the main menu, and press the "down" key to select the communication parameters	C ▼	主 菜 单 ▶通讯参数 时钟设定
4	Press the "OK" key in the main menu to enter the communication parameter options, and press the "Up" and "Down" keys to query and modify the communication address and baud rate	OK ▼ ▲	通讯参数→地址 Address = 3
5	Press the "C" key to return to the main menu, and press the "Down" key to select the clock setting	C ▼	主 菜 单 通讯参数 ▶时钟设定
6	Press the "OK" button in the main menu to enter the clock setting option, and press the "Up" and "Down" buttons to set the clock	OK ▼ ▲	时钟设定→年 20-03-26 19:38:37

TEM7E Series Moulded Case Circuit Breaker

Power distribution protection

E1
Overload long delay + Short circuit short delay + Short circuit instantaneous

E2
Overload long delay + Short circuit short delay + Short circuit instantaneous + Prewarning /
Neutral protection/Earth fault protection/ Three-phase unbalance

E3
LCD display, multi-gear setting protection of the knob,
With all the functions of the E2 series

E4
LCD display, multi-gear setting protection with knob, with all the functions of the E3 series
Yes, with communication to history records output

E5
LCD display, multi-gear setting protection with knob, with all the functions of the E4 series, and with voltage, power, electric energy, demand value, frequency, total harmonic distortion rate and phase sequence measurement functions

Motor protection

EM1
Overload long delay + Stall + Short circuit instantaneous

EM2
Overload long delay + Stall + Short circuit instantaneous + Prewarning /
Neutral protection/Earth fault protection/ Three-phase unbalance/Long start

EM3
LCD display, multi-gear setting protection of the knob,
With all the functions of the EM2 series

EM4
LCD display, multi-gear setting protection with knob, with all the functions of the EM3 series
Yes, with communication to history records output

EM5
LCD display, multi-gear setting protection with knob, with all the functions of the EM4 series, and with voltage, power, electric energy, demand value, frequency, total harmonic distortion rate and phase sequence measurement functions

TEM7E Series Moulded Case Circuit Breaker

7 Power Distribution System Protection

E type trip unit

The E type trip unit can be used in the circuit breakers from 125 to 630A with breaking grades L/M/H/S/R, and there are knob and LCD type controllers.

Basic LSI three-stage protection or LSI + earth fault protection G is available. Measurement, alarm and communication functions are available.

7.1 Protection Type

The protection value can be set in two ways – Coarse tune via knob and fine tune via key . Among them, the key is suitable for fine turning range from the maximum value defined by the knob setting to a lower value in 0.05~1 decrement.

7.1.1 Overload Protection: Long Time Delay Protection (Ir)

The overload protection has the inverse time limit characteristics, with a knob used to adjust the overload protection current value Ir, and the key can be used for fine turning. Also, the key can be used to adjust the overload protection delay time tr.

7.1.2 Short Circuit Short Time Delay Protection: (Isd)

Short circuit short delay protection is realized by adjusting the short circuit short delay protection current value Isd and adjusting the delay time tsd.

7.1.3 Short Circuit Instantaneous Protection: (Ii)

The short-circuit instantaneous protection current value Ii is adjustable.

7.1.4 Earth Fault Protection (Ig)

The earth fault protection current Ig is adjustable (this function can be disenabled), and the delay time tg is also adjustable.

7.1.5 Neutral Line Protection (Irn)

- 4-pole circuit breaker; this protection can be set via key:
  - Off: There is no protection for a neutral line.
  - 0.5: Semi-protection of neutral line, protection value is half of the protection current of each phase - 0.5 x Ir.
  - 1.0: Full protection of neutral line, the protection value equals to the protection current value of each phase - 1.0 x Ir.

TEM7E Series Moulded Case Circuit Breaker

7.1.6 Current Unbalance Protection (Iunbal)

The current unbalance protection Iunbal is adjustable (and can be disenabled), and the delay time tunbal is also adjustable.

7.1.7 Overvoltage Protection (Uov)

The overvoltage protection Uov is adjustable (and can be disenabled), and the delay time tou is also adjustable.

7.1.8 MCR Protection

MCR protection is a high-speed instantaneous protection against the circuit breaker itself, and when an overlimit fault current occurs, the controller will issue a trip command in a very short time.
The MCR protection current is the fixed value 18In, and the maximum breaking time is ≤ 30ms.

7.1.9 Plug-in Type Electrical Interlock Protection

In the plug-in type mounting products, the insert located in the mounting base is used to trigger this button for forced opening.

Note: This function can be enabled when the single-phase power supply current is 0.4In and the three-phase power supply current is 0.2In or more.

7.2 Fault Type Display

After trip due to fault, the fault type and the relevant fault phase and the corresponding fault information can be viewed through the query of the historical records.
The controller shall be powered by the external power supply.

7.3 Indicators

- Green: Ready LED indicator; when the circuit breaker is in the protection ready state, it is not light up when I<20%In, and the LED will flicker slowly (1s) when I>20%In.
- Yellow: Pre-alarm LED indicator; the indicator is always lit when I>110%Ip; the indicator will not light up when I<90%Ip.
- Red: Alarm LED indicator; the indicator will flicker in the first half of the specified trip time and remains on in the second half of the time when I>105%Ir.

TEM7E Series Moulded Case Circuit Breaker

7.4 Protection Characteristics

Protection	E trip unit							
Rated current (A)	In 40°C[1]	125	160	250	400	630		
Circuit breaker	TEM70E-125	■	-	-	-	-		
	TEM70E-160	-	■	-	-	-		
	TEM70E-250	-	-	■	-	-		
	TEM70E-400	-	-	-	■	-		
	TEM70E-630	-	-	-	-	■		

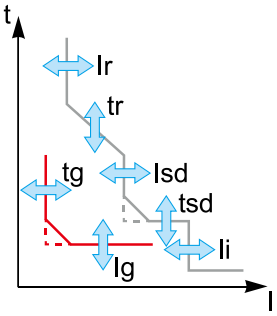

L	Long delay protection									
Trip current set value (A)	Rated current of trip unit (In)					Set value on the knob Ir				
Ir=Knob setting value										
In=125A	50	56	63	70	75	80	90	100	112	125
In=160A	63	70	75	80	90	100	112	125	140	160
In=250A	100	112	125	140	150	160	180	200	225	250
In=400A	160	180	200	225	250	280	315	350	375	400
In=630A	250	280	315	350	375	400	450	500	560	630
Key set value	With the knob set value as the maximum value, fine tune in 1A increment									
Delay time (s) tr=... Key set value										
Accuracy±10%	1.5 x Ir									
	3 x Ir									
	6 x Ir									
Thermal memory	30 minutes before and after trip									

S	Short circuit short delay protection											
Trip current set value (A) Accuracy±10%	Isd = Ir x ...	Knob set value	1.5	2	3	4	5	6	7	8	9	10
		Key set value, fine tune in 0.5xIr increment										
Delay (s) Accuracy±10%	tsd = ...	Key set value	Definite time	0.05		0.1	0.2	0.3	OFF			
			Reverse time	0.05		0.1	0.2	0.3	OFF			

I	Instantaneous protection											
Trip current set value (A) Accuracy±10%	Ii = Ir x	Key set value	2	3	4	5	6	8	10	12	14	OFF
		Key set value, fine tune in 0.5xIr increment										
	Max. breaking time		50 ms									

G	Earth fault protection											
Trip current set value (A) Accuracy±10%	Ig = In x	Knob set value	0.2	0.3	0.4	0.5	0.6	0.7	0.8	0.9	1	OFF
		Key set value, fine tune in 0.05In increment										
Delay (s)	tg = ...	Key set value	Definite time	0.1	0.2	0.3	0.4					
			Definite time	0.1	0.2	0.3	0.4					

TEM7E Series Moulded Case Circuit Breaker

Irn	Neutral line protection		
Trip current set value (A)	Irn = Ir x ...	Knob set value	0.5 1 OFF
50% semi-protection of neutral line		In the event of a neutral phase overload fault, the protection action point is equal to half of the set value. In the event of a neutral phase short-circuit short delay fault, the protection action point is equal to half of the set value. In the event of a neutral phase short-circuit instantaneous fault, the protection action point is equal to the set value	
100% full protection of neutral line		In the event of a neutral phase overload fault, the protection action point is equal to the set value. In the event of a neutral phase short-circuit short delay fault, the protection action point is equal to the set value. In the event of a neutral phase short-circuit instantaneous fault, the protection action point is equal to the set value	

Iunbal	Current unbalance protection		
Trip current set value (A) Accuracy±10%	Iunbal =	Knob set value	10% 15% 20% 25% 30% 35% 40% 50% 60% Off
		Key set value, fine tune in 1% increment	
Delay (s)	tunbal = ...	Key set value	During normal opeartion: 1~40.0s, product start time: 0.7s
Accuracy±10%		Key set value, fine tune in 1s increment	

Uov	Overvolatge protection		
Trip current set value (A) Accuracy±10%	Uov=	Key set value	Four poles: 240~480, OFF Three poles: 420~480, OFF
		Key set value, fine tune in 1V increment	
Delay (s) Accuracy±10%	tov = ...	Key set value	0.2~60s
		Key set value, fine tune in 0.1s increment	

(1) If the product is used in a high-temperature environment, the temperature derating must be considered for set value. For more information, refer to the temperature derating table.

TEM7E Series Moulded Case Circuit Breaker

8 Multi-Parameter Electric Energy Measurement

E type intelligent trip unit

In addition to the protection function, the E type trip unit has powerful functions for multi-functional power parameter measurement and operation management.

- Display settings
- Measurement function
- Alarm
- Historical data log with time display
- Communication

With the intelligent and precise instrument transformer of The E type intelligent trip unit, the E trip unit can realize its measurement functions. They are all processed by a built-in microprocessor.

8.1 LCD display

The user can view all protection settings and measurements of the main electrical parameters on the LCD screen of the trip unit.

- The E type intelligent trip unit can measure the following: current instantaneous true RMS value, voltage, frequency, power, electricity and harmonic distortion rate.

  To ensure that LCD screen works under all operating conditions, it is recommended to provide an external power supply.

  An external power supply must be used in the following situations:
- Reliable display of fault and fault current values
- Use all the functions of all E type intelligent trip units (such as: measurement at low load).
- Ensure the reliable operation of the communication system

8.2 Parameters Measurement

8.2.1 True RMS measurements

The E type intelligent trip unit can continuously display the true RMS currents for three phases and neutral line. In the event of a fault trip, the fault current will be stored.

The E type intelligent trip unit can measure the phase currents, neutral line currents, and earth fault currents.

The E type intelligent trip unit can also measure the voltage, frequency, power, and electricity.

8.2.2 Max./Min. Value Measurements

The E type intelligent trip unit can cumulatively calculate the max. and min. values for each instantaneous measured value. The max. values of the current, demand current, and power of three-phase and neutral line can be reset by the communication system.

8.2.3 Electricity measurement

The E type intelligent trip unit can calculate the amount of electricity consumed since the last reset. The start time of the electricity measurement can be reset through a key or a communication system.

8.2.4 Demands and Max. Demands

The E type intelligent trip unit can calculate the required current and power values. These calculations can be performed in a time interval of 5 to 60 minutes in 1-minute increments.

The synchronization between the display window and signal transmission can be realized through the communication system. Those calculations can be reset on a PC computer through the Modbus communication protocol no matter which calculation method is used.

8.2.5 Electricity Quality

The E type intelligent trip unit can measure the content of harmonics, including the total harmonic distortion rate (THD) of current and voltage.

TEM7E Series Moulded Case Circuit Breaker

8.3 Measurement functions of power parameters of E type intelligent trip unit integration

Measured value		
True RMS current (A)		
Current (A)	Phase current and neutral line current	Ia, Ib, Ic, In
	Earth current	Ig
	Phase unbalance current	Ba, Bb, Bc
Voltage (V)	Line voltage	UAB, UBC, UCA
	Phase voltage	Uan, Ubn, Ucn
	Unbalance line voltage, unbalance phase voltage	B U a b , B U a c , B U b c BUan,BUbn,BUcn
	Phase sequence	A-B-C, A-C-B
Frequency (Hz)		F
Power	Active (kW)	Three phases/per phase
	Reactive (kVAR)	Three phases/per phase
	Apparent (kVA)	Three phases/per phase
	Power factor	Three phases and per phase
Max. value/Min. value		
Instantaneous RMS value measurement		
Electricity measurement		
Electricity	Active (kWh), Reactive (kVARh), Apparent (kVAh)	
Demands and max. demands		
Current demand (A)	Phase current	Current value in the selected window Max. demand since the last reset
Electricity current	Active (kWh), Reactive (kVARh), Apparent (kVAh)	The current value in the selectd window is the Max. demand single the last reset
Electricity quality		
Total harmonic distortion rate (%)	Proportion of voltage value True RMS current	Phase voltage THD, line voltage THD Phase current THD

8.3.1 Other technical characteristics: Measurement accuracy
These accuracies apply to the entire system – including transformer.

- Current: ±1% (up to ±0.5%)
- Voltage: ± 0.5%
- Power: ±1.5% (up to ±1%)

TEM7E Series Moulded Case Circuit Breaker

9 Electricity Management

E type intelligent trip unit

9.1 Personalized alarm with time display

Alarm type

- LCD window display
- Alarm current value display
- Alarm time display

9.2 History Logs and Events Tables

The history logs and events tables are always in the record status

9.2.1 Three types of history logs with time display

- Trip caused by Ir, Isd, Ii, Ig exceeding the threshold: the last 20 trips

9.2.2 Each history log is recorded

- Trip reason (including fault type, fault phase information)
- Trip threshold
- Delay time

Current or voltage value (this item is not available for some fault types, such as: mcr trip), fault time (year, month, day, hour, minute, second)

9.2.3 Display history logs and events table

The time display type history logs and events table can be displayed on a PC through the communication system.

9.2.4 Built-in memory

There is a nonvolatile memory inside to save setting data, fault records, and history logs, and all recorded data can be saved in the event of a power outage.

9.2.5 Management of installed devices

Each circuit breaker equipping with an E smart trip unit can be identified by a communication system.

- Serial number ● Firmware version ● Hardware version ● User-assigned device name

This information and the preceding instructions clearly describe the status of the installed equipment.

10 Motor Protection

EM type Electronic Trip Unit

The EM type trip unit can provide the same protection functions as the E type trip unit:

- Short circuit ● Overload

In addition, it can provide the motor-specific protection function that can be set via key.

10.1 Protection

The protection value can be set in two ways – Coarse tune via knob and fine tune via key

Among them, the key is used for fine turning range from the maximum value defined by the knob setting to the lower value in 1A decrement. The motor protection has additional stall, low load, and long start protection, and long delay trip grade, and its other protections are the same as those of the power distribution type controller.

TEM7E Series Moulded Case Circuit Breaker

10.1.1 Stall (I_{jam})

This function is used to detect the motor shaft locking caused by load. This function will be disenabled during the startup of motor. During the normal operation, the trip will occur in the following situations:

- If above the threshold I_{jamo}, fine tuning can be made within 1-8 x Ir
- Delay time T_{jam} can be adjustable: 1-30 seconds

10.1.2 Low load (I_{und})

This function can be used to detect the no-load operation of the motor due to insufficient loads (such as, drain pump), and can also detect low-phase current. During the startup period of motor, this function is always available. During normal operation, the trip will occur in the following situations:

- If below the threshold I_{undo}, fine tuning can be made within 0.3-0.9 x Ir
- Delay time T_{und} can be adjustable: 1-200 seconds

10.1.3 Long Start (I_{long})

This protection function can be used to perfect thermal protection (rating). It provides better protection for the starting capacity of the motor.

It is used to detect the abnormal start of motor; that is, the startup current is always too high or too low relative to the protection threshold and delay time. Trip will occur in the following situations:

- Threshold I_{long} related, fine tuning range 1-8 x Ir
- Delay time T_{long} related, adjustment range is 1-200 seconds

10.1.4 Trip Class (Class)

There are five trip classes: 5, 10A, 10, 20, 30; this function can be disenabled.

10.1.5 Other Technical Features

The start-up time is based on the trip level

In order to start the motor normally, the EM trip unit shall check the relevant conditions according to the thermal protection (long delay) trip current Ir.

- Current> 10% x Ir (motor off limit)
- Exceed the 1.5 x Ir threshold; return to the value below this threshold before the end of the 10s delay.

If any of these conditions are not met, the thermal protection function is activated to trip the switch after a maximum time equaling to the time corresponding to the selected trip level. The threshold Ir must be set to the current indicated on the motor nameplate.

10.1.6 Long Startup

When this function is activated, additional heating protection (rating) is provided.

Long startup will cause tripping, characterized as follows:

- Current > 10% x Ir (motor cut limit), and:
- The current exceeds the long delay threshold (1-8 x Ir) and does not return to the value below this threshold value before the long delay (1-200s) expires.
- Or, not exceed the long delay threshold (1 to 8x Ir) before the long delay (1-200s) expires.

The threshold Ir must be set to the current indicated on the motor nameplate. Furthermore, this protection should be coordinated with the selected trip level.

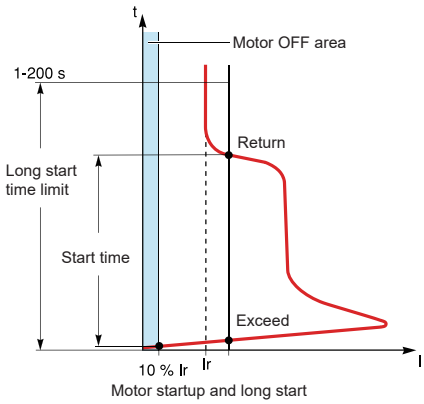

Motor startup and long start

TEM7E Series Moulded Case Circuit Breaker

10.2 EM type Protection Features

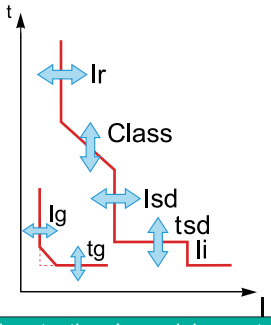

L	Overload protection: Long delay protection									
Trip current set value (A)	Rated current of trip unit (In) Set value Ir on knob									
Ir = Knob set value										
In=125A	50	56	63	70	75	80	90	100	112	125
In=160A	63	70	75	80	90	100	112	125	140	160
In=250A	100	112	125	140	150	160	180	200	225	250
In=400A	160	180	200	225	250	280	315	350	375	400
In=630A	250	280	315	350	375	400	450	500	560	630
Key setting	With the knob set value as a maximum value, fine tuning is made in 1A increment									
Trip class I										
Delay time (s) tr Based on selected trip class	1.5 x Ir									
	2 x Ir									
	7.2 x Ir									
Thermal memory	30 minutes front and after trip									

I_{jam}	Stall	
Set value (A) Accuracy ±10%	I_{jam} = Ir x ...	1-8Ir with OFF status; default setting = OFF, Fine-tuning can be made in 0.1 x Ir increment via key; it is disenabled during the startup of the motor.
Delay time (s)	T_{jam} =	1-30s Fine-tuning can be made in 1s increment via key; default set value = 30s

I_{und}	Low load (low current)	
Set value (A) Accuracy ±10%	I_{und} = Ir x ...	0.3-0.9Ir with OFF status; default setting = OFF, Fine-tuning of the motor can be made in Ir x 0.1 increment via key; it is enabled during the startup.
Delay time (s)	T_{und} =	1-200s Fine-tuning can be made in 1s increment via key; default set value = 10s

I_{long}	Long startup	
Set value (A) Accuracy ±10%	I_{long} = Ir x ...	1-8Ir with OFF status; default setting = OFF, Fine-tuning can be made in Ir x 0.1 increment via key; it is enabled during the startup of the motor.
Delay time (s)	T_{long} =	1-200s Fine-tuning can be made in 1s increment via key; default set value = 10s

TEM7E Series Moulded Case Circuit Breaker

11 Tripping characteristic curve

TEM7E electronic trip unit

TEM7E-125/160

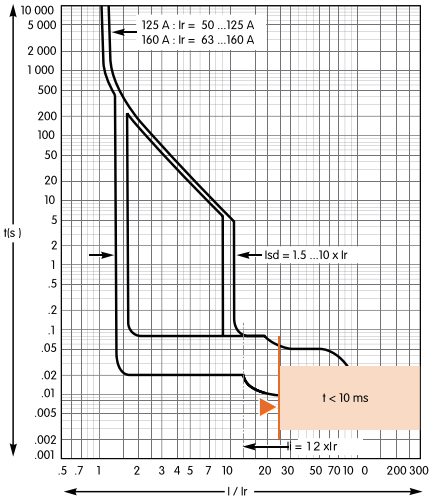

TEM7E-250

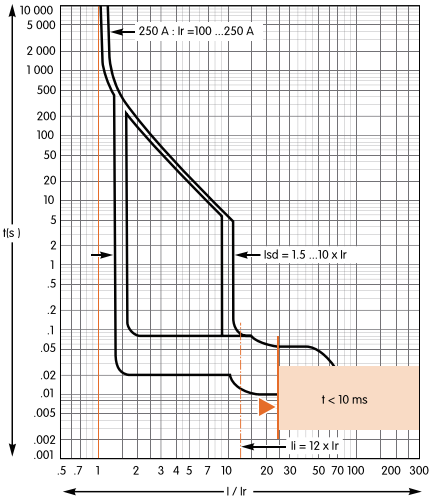

Energy trip

TEM7E-400

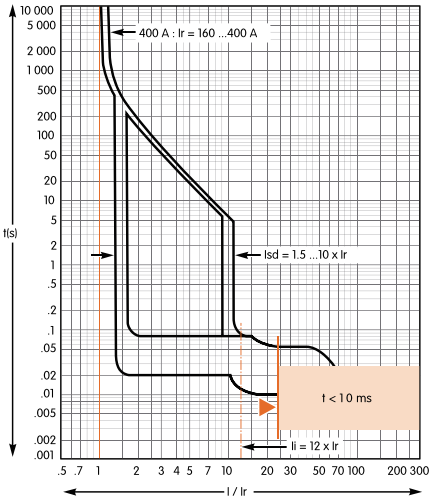

TEM7E-630

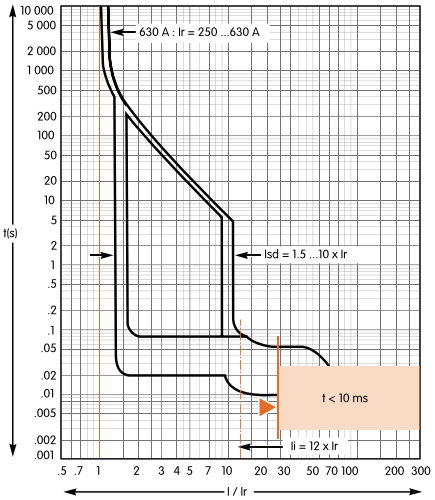

Energy trip

TEM7E Series Moulded Case Circuit Breaker

TEM7E energy trip curve

The TEM7E-125~630 circuit breaker has an energy trip system, which is a self-contained system that generates a strong gas pressure in the event of a short circuit fault to act on a piston mechanism that trips the circuit breaker and breaks the extremely large short circuit current. Under the huge pressure, the system can be disconnected quickly and reliably to realize fully selective protection.

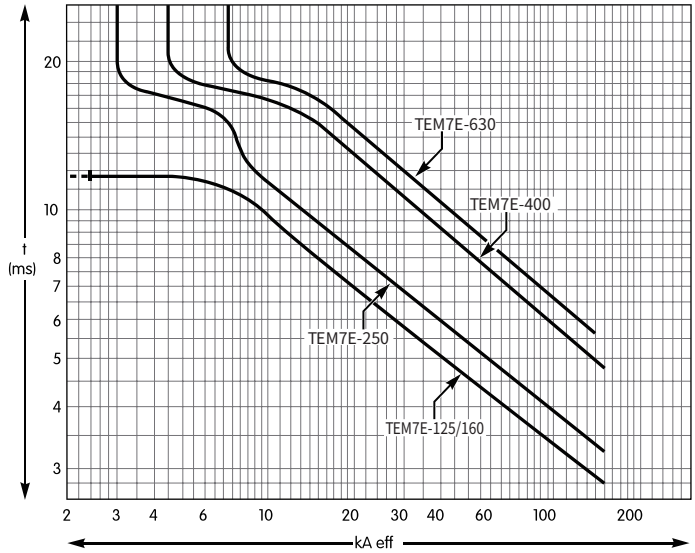

TEM7E current limiting capability

The current limiting capacity of the circuit breaker refers to the capacity of the circuit breaker to limit the short circuit current in the event of a short circuit, and the allowable current is lower than the expected short circuit current.

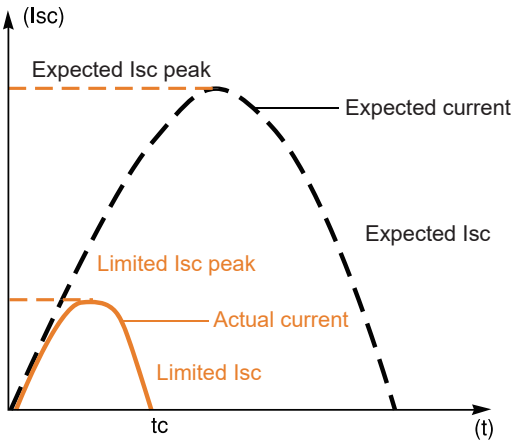

The superior current limiting capability of the TEM7E series thanks to the use of dual rotary breaking technology (the contacts are quickly and naturally repulsed, and the arc voltage is broken into two arc voltages connected in series with a steep wavefront).
The excellent current limiting capability of the TEM7E series can greatly reduce the electrodynamic force generated by the fault current, thereby greatly improving the breaking capacity of the circuit breaker.
Furthermore, TEM7E has a breaking capacity Ics equal to the limit breaking capacity Icu.
ICS values are specified in the GB/T 14048.2 standard, and are guaranteed by testing
● Continuously break the fault current 3 times, breaking current = 100% Icu.

TEM7E Series Moulded Case Circuit Breaker

● Check whether the equipment meets the requirements of normal operation, that is:
○ The protection function is activated within the range specified in the standard
○ The isolation function is absolutely safe and has not been affected in any way

Extend the life of electrical equipment
With the current limiting technology of the circuit breaker, the damage to the equipment caused by the short circuit current is greatly reduced.

Heat effect
Reduce the temperature rise and improve the service life of the cable.

Mechanical effects
With reduced electrodynamic force, the risk of deformation or damage to the contacts and busbars is greatly reduced.

Electromagnetic effects
Interference with accessory measuring devices is greatly reduced.

TEM7E current limiting curve

380/400/415V AC
Limited short circuit current (kA peak)

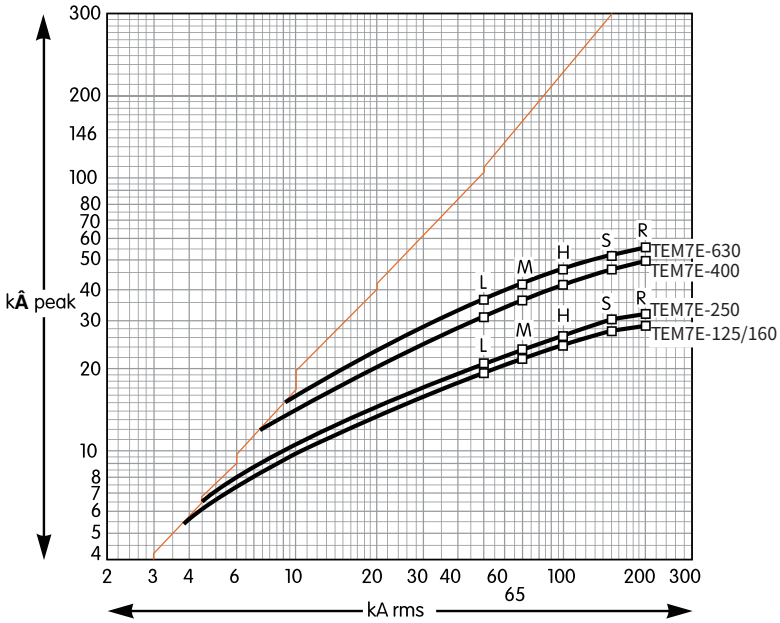

TEM7E Series Moulded Case Circuit Breaker

TEM7E thermal stress curve

380/400/415V AC
Limited energy

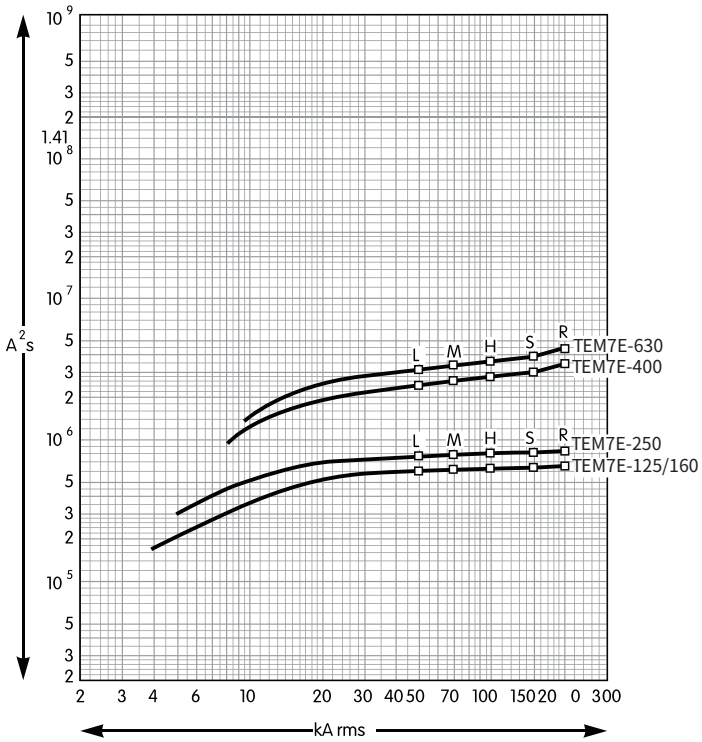

TEM7E Series Moulded Case Circuit Breaker

12 Outline and Installation Dimensions

12.1 Outline and installation dimensions for fixed type front-panel product

Dimensions 3P 4P

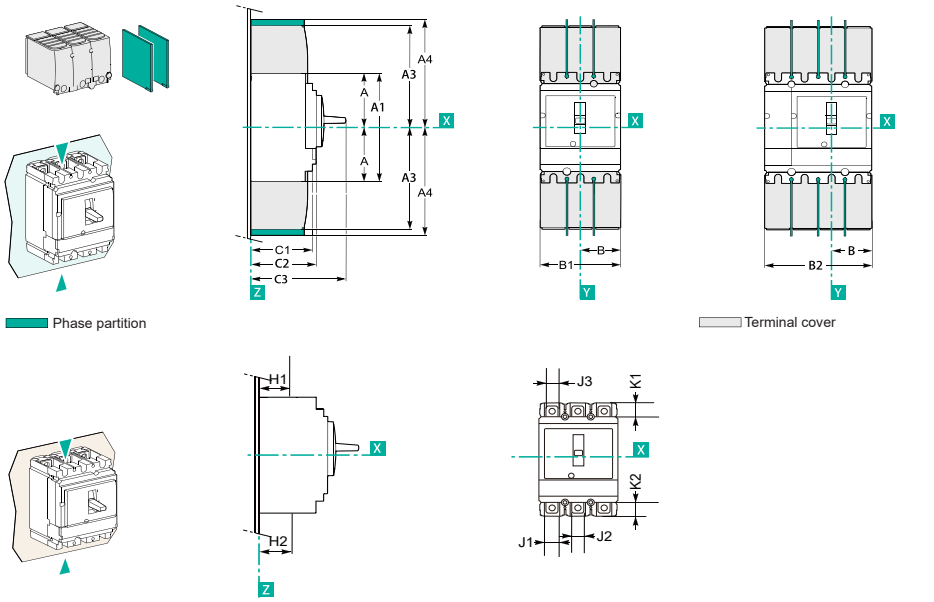

Installation TEM7(E)-125/160/250 TEM7(E)-400/630 TEM7(E)-125/160/250

Base plate mounted

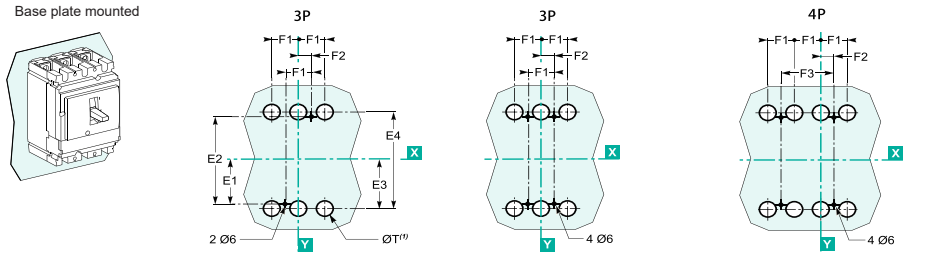

(1) φT is only used for rear connection (3P2T circuit breaker with intermediate pole installed not required).

Rail mounted

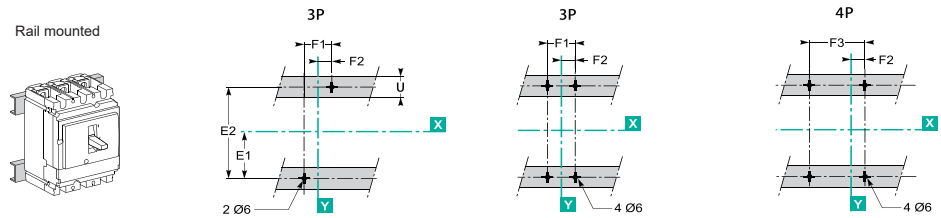

Model	A	A1	A3	A4	B	B1	B2	C1	C2	C3	E1	E2	E3	E4	F1	F2	F3
TEM7(E)-125/160/250	81	162	142.5	172.5	52.5	105	140	84.8	89.3	126.7	62.5	125	70.7	141.4	35	17.5	70
TEM7(E)-400/630	127.5	255	202.5	237.5	70	140	185	112	116.5	172.5	100	200	113.5	227	45	22.5	90

Model	øT	U	H1	H2	J1	J2	J3	K1	U
TEM7(E)-125/160/250	24	≤32	22.5	20.1	25	18	18	20	22(*16.75)
TEM7(E)-400	24	≤32	25.3	23.9(*26.4)	33.8	24(*30)	30.5	30.5	28.4
TEM7(E)-630	24	≤32	27.3	26.4	33.8	24(*30)	30.5	30.5	28.4

Note: The dimensions marked with * in the bracket are the corresponding dimensions fo the electric type

TEM7E Series Moulded Case Circuit Breaker

12.2 TEM7(E) outline and installation dimensions for plug-in type

Dimensions 3P 4P

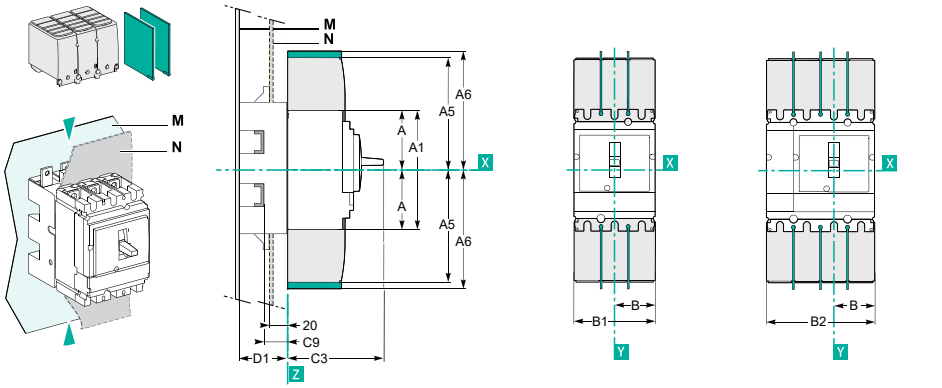

Phase partition

Terminal cover

Installation

Through-board mounted

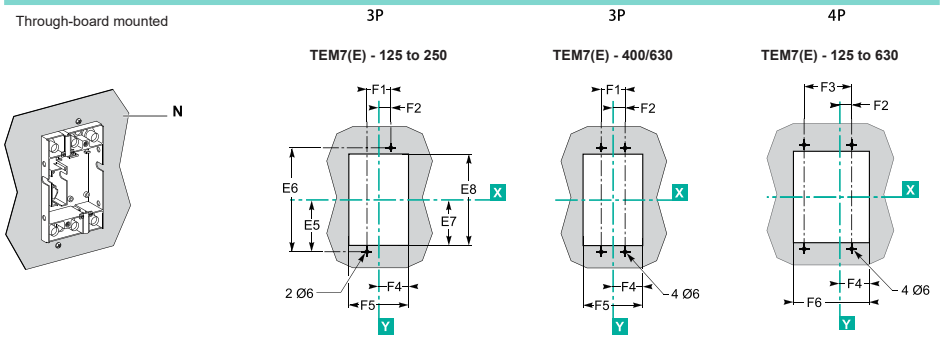

TEM7E Series Moulded Case Circuit Breaker

Base plate mounted

3P 4P

Front connection (an insulating partition is required between the mounting base plate and the circuit breaker base)

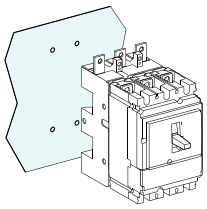

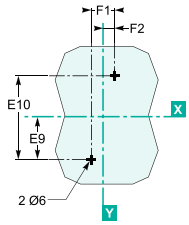

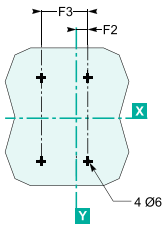

Rear connection

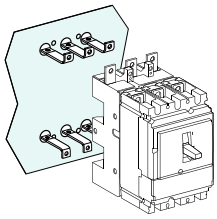

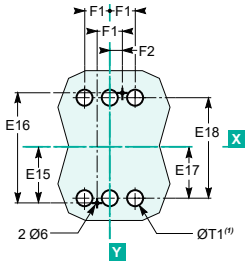

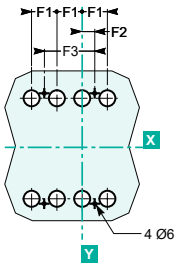

φT1 is only used for rear connection (3P2T circuit breaker; with intermediate pole installed not required).

Rail mounted

3P 4P

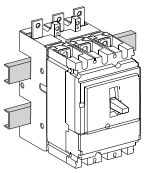

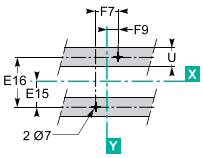

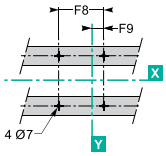

Model	A	A1	A5	A6	B	B1	B2	C3	D1	E5	E6	E7	E8	E9	E10
TEM7(E)-125/160/250	81	162	142.5	172.5	52.5	105	140	126.7	68	94.5	189	86	172	73.5	147
TEM7(E)-400/630	127.5	255	202.5	237.5	70	140	185	172.5	88	155.5	311	145.5	291	129.5	259
Model	E15	E16	E17	E18	F1	F2	F3	F4	F5	F6	F7	F8	F9	øT1	U
TEM7(E)-125/160/250	37	74	61.8	123.6	35	17.5	70	53	107	141	50	85	25	22	≤32
TEM7(E)-400/630	66.5	133	100.5	201	55	22.5	90	68	136	181	85	130	42.5	33	≤35

TEM7E Series Moulded Case Circuit Breaker

12.3 TEM7(E) outline and installation dimensions for draw-out type

Dimensions	3P	4P

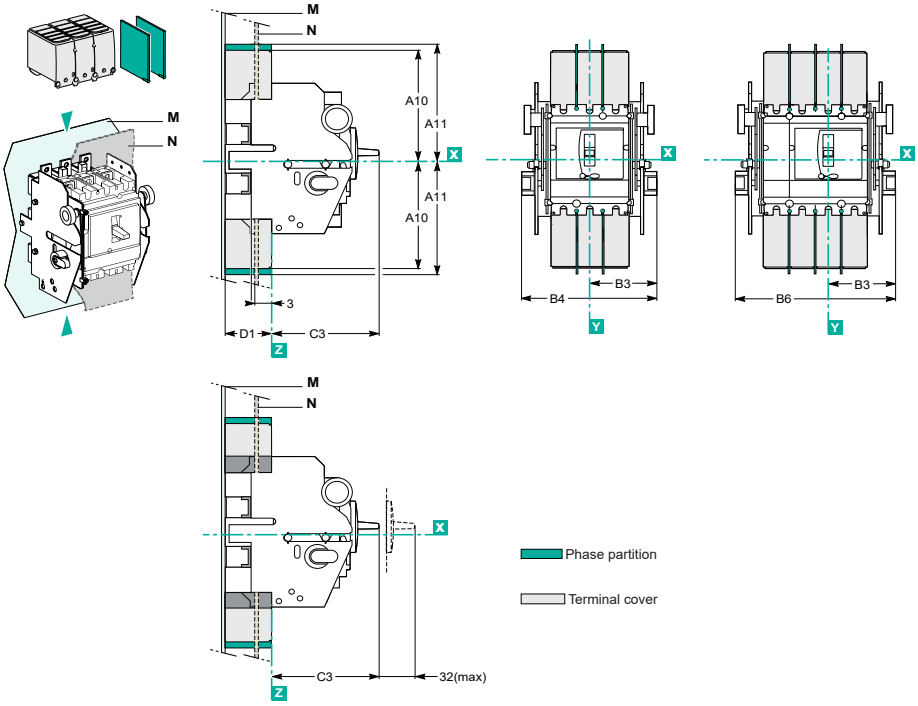

Pull-out type through-board mounted	3P	4P

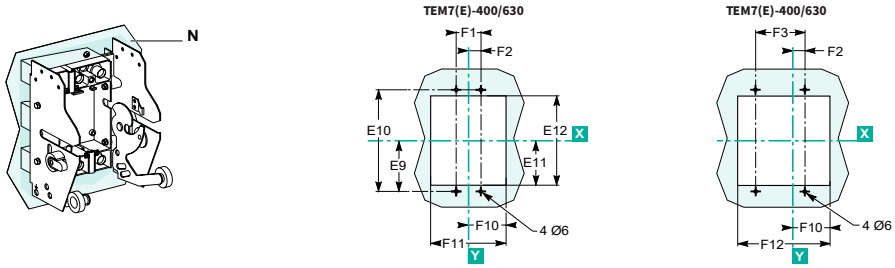

TEM7E Series Moulded Case Circuit Breaker

Base plate mounted

3P 4P

Front connection (an insulating partition is required between the mounting base plate and the circuit breaker base)

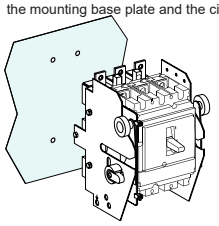

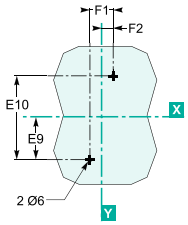

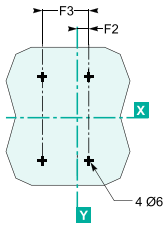

Rear connection

3P 4P

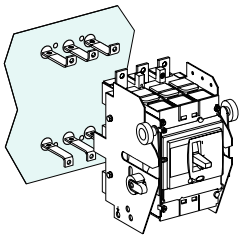

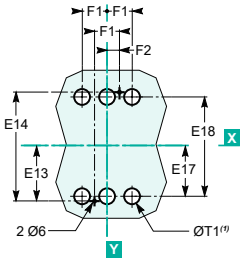

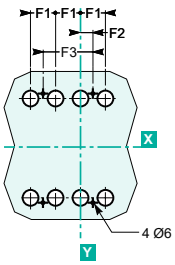

(1) ΦT1 is only used for rear connection

Rail mounted

3P 4P

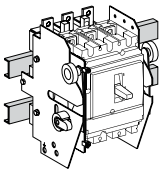

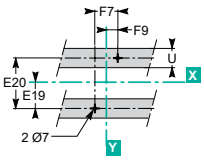

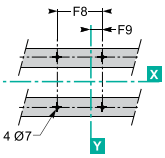

Model	A	A1	A5	A6	B	B1	B2	C3	D1	E5	E6	E7	E8	E9	E10
TEM7(E)-125/160/250	81	162	142.5	172.5	52.5	105	140	126.7	68	94.5	189	86	172	73.5	147
TEM7(E)-400/630	127.5	255	202.5	237.5	70	140	185	172.5	88	155.5	311	145.5	291	129.5	259
Model	E15	E16	E17	E18	F1	F2	F3	F4	F5	F6	F7	F8	F9	øT1	U
TEM7(E)-125/160/250	37	74	61.8	123.6	35	17.5	70	53	107	141	50	85	25	22	≤32
TEM7(E)-400/630	66.5	133	100.5	201	55	22.5	90	68	136	181	85	130	42.5	33	≤35

Note: Pull-out type is not available for 250 (inclusive) and below frame

TEM7E Series Moulded Case Circuit Breaker

12.4 TEM7(E) outline and dimensions with motor mechanism

Dimensions 3P 4P

Fixed type

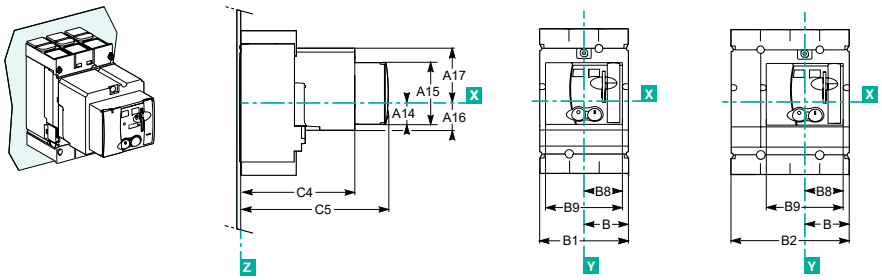

Plug-in type

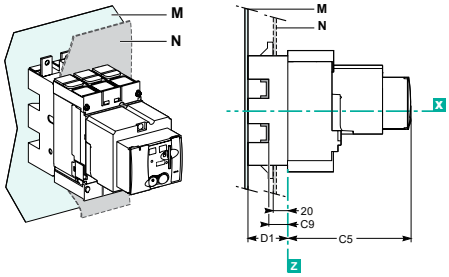

Pull-out type

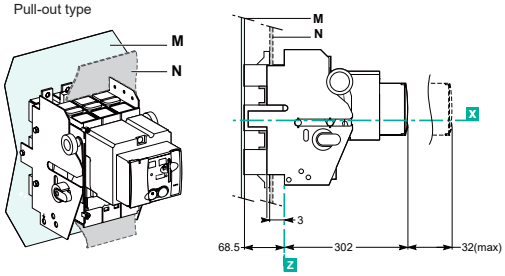

Model	A14	A15	A16	A17	B	B1	B2	B8	B9	C4	C5	C9	D1
TEM7(E)-125/160/250	18.3	70.5	32.8	55.2	52.75	105	140	45	90	192.6	203.8	38	67
TEM7(E)-400/630	-	-	48.8	91.3	70	140	185	65	130	225	260	47	88

TEM7E Series Moulded Case Circuit Breaker

12.5 TEM7(E) outline and dimensions with direct rotary handle

Dimensions 3P 4P

Fixed type

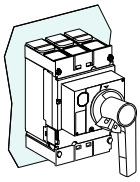

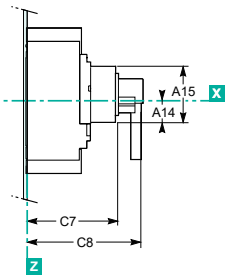

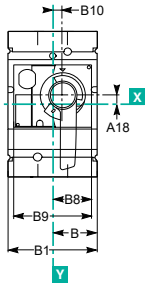

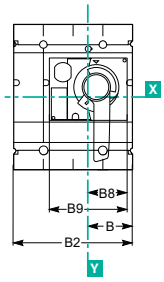

Plug-in type

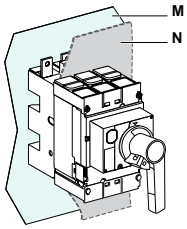

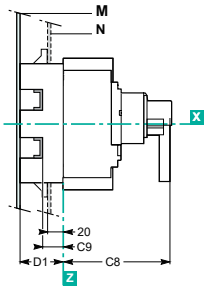

Pull-out type

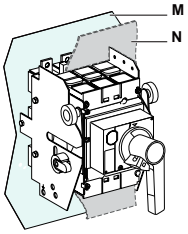

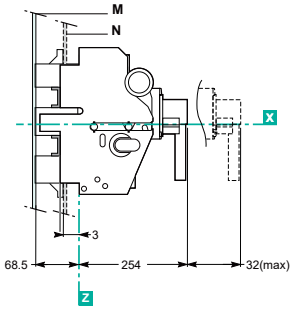

Model	A14	A15	A18	B	B1	B2	B8	B9	B10	C7	C8	C9	D1
TEM7(E)-125/160/250	32	82.8	12	52.5	105	140	45	90	15.5	128.3	176.7	38	67
TEM7(E)-400/630	42.4	131	19.2	70	140	185	60	120	18	162	208.7	47	88

TEM7E Series Moulded Case Circuit Breaker

12.6 TEM7(E) outline and dimensions with extended rotary handle

Dimensions

Fixed type or plug-in type circuit breaker

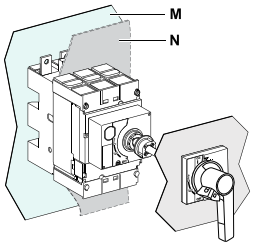

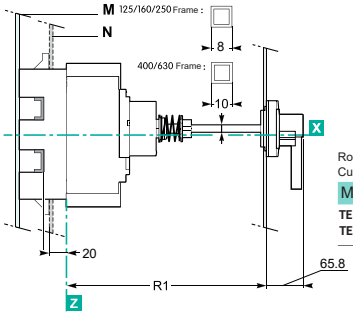

Rod length (mm): Standard 150
Customized

Model	R1
TEM7(E)-125/160/250	280
TEM7(E)-400/630	312

Draw-out type circuit breaker

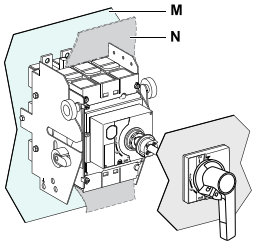

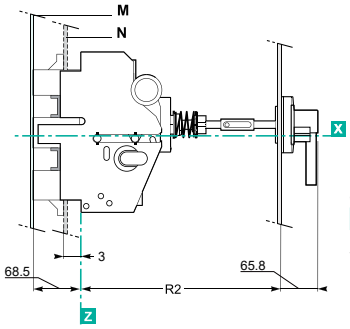

Rod length (mm): Standard 150
Customized

Model	R2
TEM7(E)-400/630	353.5

Dimensions and door hole

Model	A11	B5
TEM7(E)-125/160/250	11.8	15.3
TEM7(E)-400/630	19.6	18.2

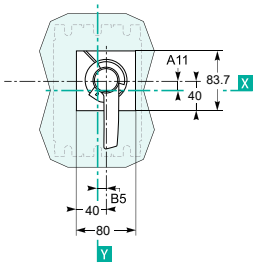

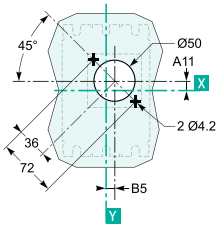

TEM7E Series Moulded Case Circuit Breaker

12.7 TEM7(E) opening of the hole on screen of the fixed and plug-in type

Door opening	TEM7(E)-125/160/250	TEM7(E)-400/630

Toggle handle

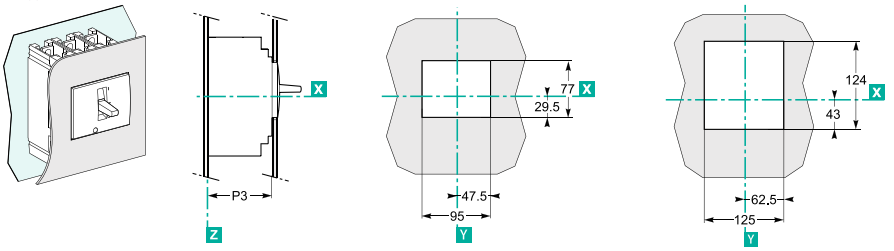

Toggle handle, accessible trip unit

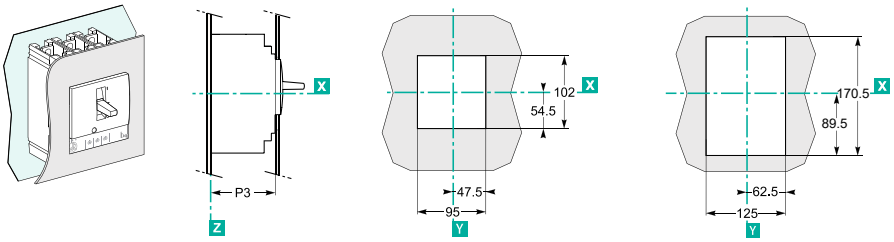

Model	P3
TEM7(E)-125/160/250	88
TEM7(E)-400/630	117

TEM7E Series Moulded Case Circuit Breaker

13 Accessories

Internal accessories

1. Aux. contact AX
2. Alarm contact AL
3. Shunt release SHT
4. Undervoltage release UVT

External accessories

5. Direct rotary handle (AH)
6. Extended rotary handle (RH)
7. Motor mechanism (CD2)
8. Plug-in base (PIA)
9. Draw-out base (DOB)

TEM7E Series Moulded Case Circuit Breaker

Internal accessories

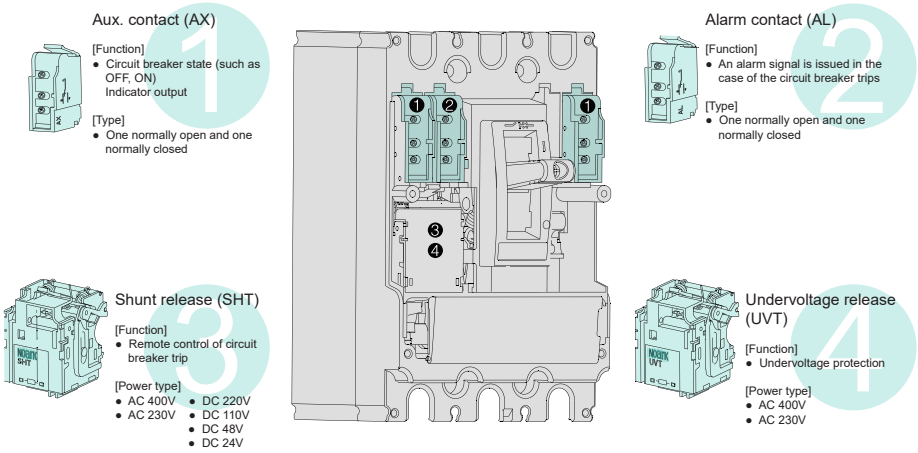

External accessories

Direct rotary handle (AH)

Protection grade: IP40

[When the direct rotary handle is added, the following functions can be guaranteed]

- Reliable insulation
- Suitable for isolation function
- The free tripping of the circuit breaker can be realized
- Three position indications: ON/OFF/TRIP
- Not affect the operation of the release and “Trip” trip test button by users

[Lock]

- The user can choose to add a padlock at the ON or OFF position (self-provided, diameter 5-8mm)
- 1~3 padlocks are provided at each position
- Or the handle lock accessory is used, which can be locked in the ON or OF position

TEM7E Series Moulded Case Circuit Breaker

Extended rotary handle (RH)

The extended rotary handle is added, so that the circuit breaker installed in the switchgear can be operated through this handle on the door of the switchgear, and the following functions can be guaranteed:

- Reliable insulation
- Suitable for isolation function
- The free tripping of the circuit breaker can be realized
- Three position indications: ON/OFF/TRIP
- Not affect the operation of the release and “Trip” trip test button by users and it is ensured that the circuit breaker is not turned on when the cabinet door opens

[Lock]

- The user can choose to add a padlock at the ON or OFF position (self-provided, diameter 5-8mm)
- 1~3 padlocks are provided at each position
- Or the handle lock accessory is used, which can be locked in the ON or OF position

Motor mechanism (CD2)

Protection grade: IP40

[Function]

- The push button is used to turn on and turn off the circuit breaker
- Motor energy storage or manual energy storage with manual operating handle can be freely selected
- With energy storage indication, OFF/ON indication, and indication of the number of operations

Manual operation

Turn the "Manual/Auto" switch to the Manual position, and turn the operating handle to turn on and off the circuit breaker.

Auto operation

Turn the "Manual/Auto" switch to the Auto position, remotely press the "ON or OFF" button to turn on and turn off the circuit breaker. The auto turn-on or turn-off can be controlled by the pulse type or self-holding signals.

Only when the control voltage is ≥ 85% Un and ≤ 110% Un, it is can ensured that the circuit breaker is reliably turned on and off.

Plug-in type base (PIA)

- To realize the fast replacement of the circuit breaker, there is no need to change the inlet and outline wires and mounting base
- The plug-in type base can be pre-installed to ensure that the circuit breaker can be easily added by users
- When the circuit breaker is through-board mounted or base-mounted, the power supply circuit can be isolated
- The use of attached safety device can ensure that the circuit breaker can trip automatically when the circuit breaker is in the ON state

TEM7E Series Moulded Case Circuit Breaker

Draw-out type base (DOB)

- To realize the fast replacement of the circuit breaker, there is no need to change the inlet and outline wires and mounting base
- The plug-in type base can be pre-installed to ensure that the circuit breaker can be easily added by users
- When the circuit breaker is through-board mounted or base-mounted, the power supply circuit can be isolated
- The use of attached safety device can ensure that the circuit breaker can trip automatically when the circuit breaker is in the ON state

Circuit breakers with a combined draw-out type base are available in the following two states:

- Connection state: The power circuit is turned on
- Removable state: The circuit breaker can be removed from the base

Vigi Leakage Protection Module

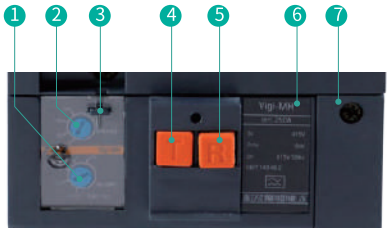

1. Sensitivity setting
2. Delay setting (for selective leakage protection)
3. Set value envelope
4. Test button (used to simulate leakage fault for regular inspection of the leakage protection function)
5. Reset button (reset must be carried out after leakage fault tripping)
6. Nameplate
7. Location of SDV aux. contacts

[Functions]

- The Vigi module is installed at the lower end of the circuit breaker to form the VigiTEM7/M7E.
- Leakage protection available for all three-pole or four-pole VigiTEM7/M7E-125~630 circuit breakers.
- The Vigi module equipped with the SDV aux. switch remotely controls the circuit breaker to trip in the event of a leakage fault.
- The Vigi module can be self-powered by the power distribution system without any external power supply required. It can work continuously even when there is a two-phase power supply.
- The Vigi module is a user safety device that shall be checked regularly (every 6 months).

TEM7E Series Moulded Case Circuit Breaker

Accessory characteristics

Shunt release

a. When the control voltage is ranged 70%-100%Un, the circuit breaker is reliably disconnected.

b. Power-on for a long time is prohibited (1≤5s). Response time: Pulse type: ≥20ms, ≤60 ms.

Undervoltage release

a. When the control voltage drops to 35%-70%Un, the undervoltage release should trip. The circuit breaker is reliably disconnected.

b. When the control voltage is greater than or equal to 85%Un, it shall be guaranteed that the circuit breaker can be turned on reliably.

c. When the control voltage is less than 35%Un, it is prevented that the circuit breaker is turned on.

Note: For circuit breakers equipped with undervoltage releases, the circuit breakers can be only turned off and turned on normally when the control voltage is greater than or equal to 85%Un.

Shunt release wiring diagram

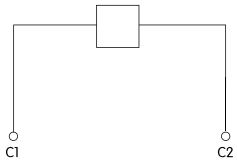

Undervoltage release wiring diagram

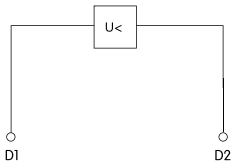

Aux. contact wiring diagram

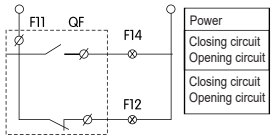

Aux. contacts

Function: Used to indicate the contact position of the circuit breaker.

When the circuit breaker is in the "OFF" position

When the circuit breaker is in the "ON" position

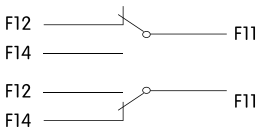

TEM7E Series Moulded Case Circuit Breaker

14 Install TEM7E circuit breaker

- Connected with main circuit
  Wiring must be carried out by professional with technical qualification
  Wiring operation can be carried out only after confirming that the power supply is completely disconnected.
- Select the connecting wire.

The cross-sectional area of the connecting wire and the corresponding rated current are listed in the table below:

Rated current (A)	16 20	25	32	40 50	63	80	100	125 140	160	180 200 225	250	315 350	400
Sectional area of wire (mm^2)	2.5	4	6	10	16	25	35	50	70	95	120	185	240

Rated current (A)	Cable		Copper bar	
	Qty.	Sectional area (mm^2)	Qty.	Size mm x mm
500	2	150	2	30 X 5
630	2	185	2	40 X 5

- For back-panel wiring connection, the insulating sleeve must be installed on the wiring terminal
- Connect the wire crimped with bolts to the conductive electrode of the circuit breaker, and tighten it.
- Install arc isolating sheet between the phases of the circuit breaker
- Inspection
  The circuit breaker should be checked according to the installation requirements before use, and its fixed connection part should be connected reliably the circuit breaker should be operated several times, and its operating mechanism should work flexibly and reliably.

TEM7E Series Moulded Case Circuit Breaker

15 Working and Installation Conditions

- Ambient temperature: -40°C ~+70°C, and the mean value does not exceed +50°C within 24h
- Note: When circuit breakers are used in ambient air temperatures above +70°C or below -40°C, please contact the manufacturer.
- Altitude: The altitude of the installation site does not exceed 2000m if the altitude exceeds 2000m, please refer to the altitude derating coefficient table
- Atmosphere conditions: The relative humidity does not exceed 50% at the max. ambient temperature of +55°C, and a higher humidity is allowed at lower temperatures the monthly mean maximum relative humidity of the wettest month is 90% when the monthly minimum mean temperature is +25°C in the wettest month, considering the condensation that occurs on the surface of the product due to temperature changes. The circuit breaker should be installed in a place where there is no explosion hazard, no abnormal electric dust, and no medium sufficient to cause metal corrosion and damage to the insulatiaon
- Pollution degree: Pollution level 3 the pollution degree of the accessories installed in the moulded case circuit breaker is Level 2
- Installation category: The installation category of main circuit of the moulded case circuit breaker is Class III, and of the auxiliary circuit and control circuit is Class II.

Installation method

The circuit breaker can be installed perpendicularly (that is, vertical installation) or horizontally (that is: lateral installation), and can also installed using the bottom incoming method.

16 Operation and Maintenance

- When selecting the circuit breaker, the technical parameters indicated on the circuit breaker should be consistent with the actual requirements.
- The various characteristics and accessories of the circuit breaker are set by the manufacturer, and they cannot be adjusted at will in use.
- Conduct the periodic inspection, remove dust on the surface of the shell, and keep the circuit breaker clean and well insulated.
- The different rated currents should be selected according to the requirements of the protection object, otherwise the correct protection effect cannot be realized.
- Maintenance and inspection must be carried out by professional technician.
- The models of the internal and external accessories selected by the user shall be provided by our company to ensure the quality. If they are selected and purchased or modified by the user without permission, our company will not bear all consequences incurred.
- Please turn off the circuit breaker before any maintenance operation.
- The circuit breaker shall be free from the rain attacks and falling off during the operation, storage and transportation.

TGM1NL Series Moulded Case Circuit Breaker with Earth Leakage Protection-A/AC Type

1 Overview

TGM1NL Series Moulded Case Circuit Breaker with Earth Leakage Protection-A/AC Type is one of the new circuit breakers researched and developed by our company using international advanced technology, featuring with high breaking capacity, box accessories, Small volume and compact structure, green environmental protection, and A-type leakage protection.

Circuit breaker is divided into L type (standard type) and M type (middle breaking type) according to their rated ultimate short-circuit breaking capacity (ICU), and is an ideal product for power distribution and motor protection. It is primarily used in AC 50/60Hz power distribution network with the rated voltage up to 415V (240V for 2P) and with the rated current ranged 16A to 800A mainly for providing indirect contact protection for personal electric shock with fatal danger and for preventing a fire risk caused by the earthing fault current due to the damaged equipment insulation; it is also used to distribute electric energy, and protect the lines and power supply equipment to prevent overload and short circuit damage, and used for infrequent conversion of lines and infrequent start of motor.

This series of circuit breakers can be installed vertically (that is longitudinally installed) or horizontally (that is laterally installed).

This circuit breaker can work normally under the conditions that any phase of three-phase power supply is open.

With isolation function, the corresponding symbol is:

Circuit breakers comply with the following standards:

IEC 60947-1 and IEC 60947-2.

2 Type Designation

TG M 1N L A – □□□□ / □□□□□□□□□□□□□□

- Special requirements:
- Application code: No code for conventional type GY- Plateau SR – Damp and heat HB - Environmental protection YW-Salt spray DW-Low temperature
- Installation method code: No code: Fixed type front-panel B – Fixed type back-panel C – Plug-in type
- Accessory voltage:
- Max. breaking time: Default: Non-delay type Delay type: Specific specifications see "Table 5"
- Residual operating current: see "Table 3"
- Rated current:
- Leakage alarm module code: Default: without module; I: Leakage alarm and trip; II: The leakage alarm but non-trip
- Derived code: No code: Conventional products T: Product with transparent cover
- N-pole code: Three-pole four-wire/Single pole product code; Three-pole and two-pole products: No code
- Application code: Power distribution; 2: Motor protection
- Release type and accessory code:
- Number of poles: 1N-1P+N; 2 - poles; 3 - three poles;
- 3N-three-pole four-wire; 4 – four poles;
- Leakage shutdown function code: No code: without leakage shutdown function; G: with leakage shutdown function;
- Operation method code: No code: Operation directly via handle; P: Operation via motor Z: operation via rotary handle (for switchgear)
- Breaking capacity: L:low breaking(standard) M:medium breaking H:high breaking
- Frame rated current
- Residual current operation type: No code: AC type; A – A type
- With residual current protection
- Design code
- Moulded case circuit breaker
- Enterprise code

Only 125/250 frame 4P and 400 frame 3P / 3P+N / 4P are provided for transparent cover type

TGM1NL Series Moulded Case Circuit Breaker with Earth Leakage Protection-A/AC Type

Table 1

Code	Description
A	N pole is not equipped with an overcurrent trip element, and the N pole is always closed.
B	N pole is not equipped with an overcurrent trip element, and the N pole is open and closed together with other three poles (N pole is first closed and then open)
C	N pole is equipped with an overcurrent trip element, and the N pole is open and closed together with other three poles (N pole is first closed and then open)
D	N pole is equipped with an overcurrent trip element, and the N pole is always closed.

Note: No code: 3-pole product; 1N and 3N correspond to A type or D type; 2P and 4P correspond to B type or C type.

2.1 Four-pole product code views

A type: N pole is not equipped with an overcurrent trip element, and the N pole is always closed and is open and closed not together with other three poles.

Without overcurrent release

B type: N pole is not equipped with an overcurrent trip element, and the N pole is open and closed together with other three poles (N pole is first closed and then open)

Without overcurrent release

C type: N pole is equipped with an overcurrent trip element, and the N pole is open and closed together with other three poles (N pole is first closed and then open)

With overcurrent release

D type: N pole is equipped with an overcurrent trip element, and the N pole is always closed, and is open and closed not together with other three poles.

With overcurrent release

2.2 Release and Accessory Code

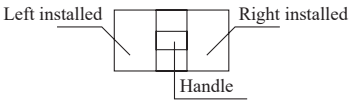

Alarm contact ● Aux. Contact ○
Shunt release ■ Undervoltage release ▲

TGM1NL Series Moulded Case Circuit Breaker with Earth Leakage Protection-A/AC Type

Table 2

Accessory name	Accessory code		Accessory installation and lead-out mode					
	Single magnetic release	Thermal magnetic release	TGM1NL-125/160		TGM1NL-250/320		TGM1NL-400/630/800	
			3P	4P	3P	4P	3P	4P
No accessory	200	300						
Alarm contact	208	308						
Shunt release	210	310						
Aux. contact	220	320						
Undervoltage release	230	330						
Shunt release Aux. contact	240	340						
Shunt release Undervoltage release	250	350						
Two sets of aux. contacts	260	360						
Aux. contact Undervoltage release	270	370						
Shunt release Alarm contact	218	318						
Aux. contact Alarm contact	228	328						
Undervoltage release Alarm contact	238	338						
Shunt release Aux. contact Alarm contact	248	348						
Two sets of aux. contacts Alarm contact	268	368						
Undervoltage release Aux. contact Alarm contact	278	378						

*Notes:

1. 200 (electromagnetic release), refer to the circuit breaker body only with an electromagnetic release; that is, there is only a short circuit protection, and no overload protection characteristic;
2. 300 (complex release), refer to the circuit breaker body with a thermodynamic + electromagnetic release; that is: with overload and short circuit protection characteristic;
3. 1P+N/2P product cannot be equipped with internal accessories.
4. The transparent cover type circuit breakers cannot be equipped with accessories
5. One set of below 400 auxiliary contacts include one normally open and one normally closed contact, and one set of 400 and above auxiliary contacts include two normally open and two normally closed contacts.

TGM1NL Series Moulded Case Circuit Breaker with Earth Leakage Protection-A/AC Type

3 Technical Parameters

3.1 Basic parameters

Table 3

Basic parameters									
Frame rated current (A)		125		160		250		320	
Number of poles		1P+N、2P、3P、3P+N、4P		1P+N、2P、3P、3P+N、4P		1P+N、2P、3P、3P+N、4P		1P+N、2P、3P、3P+N、4P	
Frequency (Hz)		50/60							
Rated operating voltage Ue (V)	1P+N、2P	220/230/240		220/230/240		220/230/240		220/230/240	
	3P、3P+N、4P	380/400/415		380/400/415		380/400/415		380/400/415	
Rated insulation voltage Ui (V)	1P+N、2P	690		690		690		690	
	3P、3P+N、4P	800		800		800		800	
Rated impulse withstand voltage Uimp (kV)		8							
Rated current In (A)		16、20、25、30、32、40、50、60、63、65、70、75、80、90、100、110、125		16、20、25、30、32、40、50、60、63、70、75、80、100、125、140、150、160		100、125、140、150、160、170、180、200、225、250		100、125、140、150、160、170、180、200、225、250、270、280、300、315、320	
Breaking capacity level		L	M	L	M	L	M	L	M
Rated ultimate short circuit breaking capacity Icu (kA)		35	50	35	50	35	50	35	50
Rated run short circuit breaking capacity Ics (kA)		26	36	26	36	26	36	26	36
Isolation function		yes (2P、3P、4P)		yes (2P、3P、4P)		yes (2P、3P、4P)		yes (2P、3P、4P)	
Usage category		Type A							
Flashover distance (mm)		≤50		≤50		≤50		≤50	
Mechanical life (times)	With With maintenance	40000		40000		40000		40000	
	Without maintenance	20000		20000		20000		20000	
Electrical life (times)	AC415V In	10000		10000		10000		10000	
Rated residual operating current value IΔn (mA)	Non-delay type	30/50/75/100/150/200/300/400/500/600/800/1000		30/50/75/100/150/200/300/400/500/600/800/1000		30/50/75/100/150/200/300/400/500/600/800/1000		30/50/75/100/150/200/300/400/500/600/800/1000	
	Delay type	50/75/100/150/200/300/400/500/600/800/1000		50/75/100/150/200/300/400/500/600/800/1000		50/75/100/150/200/300/400/500/600/800/1000		50/75/100/150/200/300/400/500/600/800/1000	
Accessory information									
Operation directly via handle		■		■		■		■	
Extended rotary handle		□		□		□		□	
Motor mechanism		□		□		□		□	
Shunt release		□		□		□		□	
Undervoltage release		□		□		□		□	
Aux. contact		□		□		□		□	
Alarm contact		□		□		□		□	
Fixed type front-panel		■		■		■		■	
Fixed type back-panel		□		□		□		□	
Plug-in type front-panel (optional not for 4P product)		□		□		□		□	
Plug-in type back-panel		□		□		□		□	
Transition busbar		□		□		□		□	
Phase partition		■		■		■		■	

□ Optional ■ Standard

TGM1NL Series Moulded Case Circuit Breaker with Earth Leakage Protection-A/AC Type

Table 3, continued

Basic parameters							
Frame rated current (A)		400		630		800	
Number of poles		3P、3P+N、4P		3P、3P+N、4P		3P、3P+N、4P	
Frequency (Hz)		50/60					
Rated operating current Ue (V)	3P、3P+N、4P	380/400/415		380/400/415		380/400/415	
Rated insulation voltage Ui (V)	3P、3P+N、4P	800		800		800	
Rated impulse withstand voltage Uimp (kV)		8					
Raed current In (A)		200、225、250、280、300、315、320、350、380、400		400、450、500、550、630		400、450、500、550、630、700、800	
Breaking capacity level		L	M	L	M	L	M
Rated ultimate short circuit breaking capacity Icu (kA)		50	75	50	75	50	75
Rated run short circuit breaking capacity Icu (kA)		36	50	36	50	36	50
Isolation function		yes (3P、4P)		yes (3P、4P)		yes (3P、4P)	
Usage category		Type A					
Flashover distance (mm)		≤100		≤100		≤100	
Mechanical life (times)	With With maintenance	20000		10000		10000	
	Without maintenance	10000		8000		8000	
Electrical life (times)	AC415V In	8000		7500		7500	
Rated residual operating current value IΔn (mA)	Non-delay type	30/50/75/100/150/200/300/400/500/600/800/1000		50/75/100/150/200/300/400/500/600/800/1000		50/75/100/150/200/300/400/500/600/800/1000	
	Delay type	50/75/100/150/200/300/400/500/600/800/1000		50/75/100/150/200/300/400/500/600/800/1000		50/75/100/150/200/300/400/500/600/800/1000	
Accessory information							
Operation directly via handle		■		■		■	
Extended rotary handle		□		□		□	
Motor mechanism		□		□		□	
Shunt release		□		□		□	
Undervoltage release		□		□		□	
Aux. contact		□		□		□	
Alarm contact		□		□		□	
Fixed type front-panel		■		■		■	
Fixed type back-panel		□		□		□	
Plug-in type front-panel (optional not for 4P product)		□		□		□	
Plug-in type back-panel		□		□		□	
Transition busbar		□		□		□	
Phase partition		■		■		■	

□ Optional ■ Standard

TGM1NL Series Moulded Case Circuit Breaker with Earth Leakage Protection-A/AC Type

3.2 Product trip characteristic sees Table 4

Table 4

Rated current of release (A)	Thermal release (ambient temp. + 30°C)		Electromagnetic release operating current (A)	Remarks
	1.05In (cold state) non-operation time (h)	1.3In (hot state) operation time (h)		
16≤In≤63	≥1	＜ 1	6In±20%、8In±20%、10In±20%	Power distribution type
63 ＜ In≤800	≥2	＜ 2		
16≤In≤800	1.0In (cold state) non-operation time (h)	1.2In (hot state) operation time (h)	12In±20%	Motor protection type
	≥2	＜ 2		

*Notes:
Hot state usually refers to the state that the conventional non-trip current is sustained until the appointed time expires.
40A and below instantaneous operating characteristic is set according to 40A
Reference temperature for the motor protection type is +40°C.

3.3 Residual current protection operation time of general type (non-delay) product sees Table 5

Table 5

Residual current		I △ n	2I △ n	5I △ n[a]	10I △ n[b]
Non-delay type	Max. breaking time (s)	0.2	0.15	0.04	0.04

Notes: Circuit breaker with I △ n ≤30mA shall be of the non-delay type;
(a) For Moulded case circuit breaker with earth leakage protection with I △ n ≤30mA, 5I △ n can be replaced by 0.25A;
(b) If replaced by 0.25A in Item (a), 10I △ n is 0.5A.

3.4 Residual current protection operation time of the delay type product sees Table 6

Table 6

Ultimate non-drive time (s)	Max. breaking time at I △ n (s)	At 2I △ n		Max. breaking time at 5I △ n (s)	Max. breaking time at 10I △ n (s)
		Ultimate non-drive time (s)	Max. breaking time (s)		
0.06	0.2	0.06	0.2	0.15	0.15
0.1	0.3	0.1	0.3	0.25	0.25
0.2	0.4	0.2	0.4	0.35	0.35
0.3	0.5	0.3	0.5	0.45	0.45
0.4	0.6	0.4	0.6	0.55	0.55
0.5	0.7	0.5	0.7	0.65	0.65
0.6	0.8	0.6	0.8	0.75	0.75
0.7	0.9	0.7	0.9	0.85	0.85
0.8	1	0.8	1	0.95	0.95
1	2	1	1.8	1.5	1.5

TGM1NL Series Moulded Case Circuit Breaker with Earth Leakage Protection-A/AC Type

3.5 TGM1NL series time / current characteristic curve

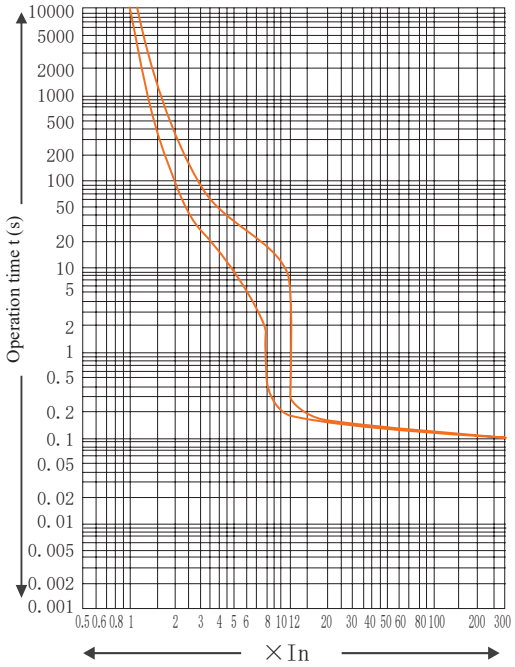

3.6 Circuit breaker power loss reference Table

Table 7

Product model	Current (A)	Single-pole resistance (mΩ)	3/4 pole total power loss (W)		
			Front-panel wiring	Back-panel wiring	Plug-in type back-panel wiring
TGM1NL-125	125	0.72	28	31	32
TGM1NL-160	160	0.4	60	87	89
TGM1NL-250	250	0.2	63	90	90
TGM1NL-320	320	0.19	65	95	98
TGM1NL-400	400	0.15	68	72	100
TGM1NL-630	630	0.14	180	190	200
TGM1NL-800	800	0.11	200	230	290

3.7 Sectional area of connecting copper wire of product

Table 8

Rated current (A)	> 12 ≤20	> 20 ≤25	> 25 ≤32	> 32 ≤50	> 50 ≤65	> 65 ≤85	> 85 ≤115	> 115 ≤150	> 150 ≤175	> 175 ≤225	> 225 ≤250	> 250 ≤275	> 275 ≤350	> 350 ≤400
Sectional area of wire (mm^2)	2.5	4	6	10	16	25	35	50	70	95	120	150	185	240

Rated current (A)	Copper wire or insulated copper wire		Copper busbar	
	Qty.	Sectional area (mm^2)	Qty.	Dimensions
(mm x mm)	2	150	2	30x5
> 500 ≤630	2	185	2	40x5
> 630 ≤800	2	240	2	50x5

TGM1NL Series Moulded Case Circuit Breaker with Earth Leakage Protection-A/AC Type

3.8 Product wire tightening torque

Table 9

Model	TGM1NL-125/160	TGM1NL-250/320	TGM1NL-400	TGM1NL-630/800
Thread nominal diameter (mm)	M8	M8	M10	M12
Tightening torque (N.m)	10	12	22	28

3.9 Derating coefficient for changes of ambient temperature sees Table 10

Table 10

Product model	-35℃	-30℃	-25℃	-20℃	-15℃	-10℃	-5℃	0℃	30℃	35℃	40℃	45℃	50℃	55℃	60℃
TGM1NL-125	1.4In	1.35In	1.3In	1.2In	1.18In	1.15In	1.15In	1.1In	1In	0.95In	0.94In	0.93In	0.92In	0.91In	0.89In
TGM1NL-160	1.4In	1.35In	1.3In	1.25In	1.22In	1.2In	1.15In	1.1In	1In	0.95In	0.94In	0.93In	0.92In	0.91In	0.89In
TGM1NL-250	1.4In	1.35In	1.3In	1.25In	1.2In	1.18In	1.15In	1.1In	1In	0.95In	0.9In	0.89In	0.85In	0.81In	0.78In
TGM1NL-320	1.4In	1.35In	1.3In	1.25In	1.2In	1.18In	1.15In	1.1In	1In	0.95In	0.9In	0.89In	0.85In	0.81In	0.78In
TGM1NL-400	1.6In	1.55In	1.44In	1.42In	1.4In	1.35In	1.3In	1.25In	1In	0.95In	0.9In	0.89In	0.85In	0.81In	0.78In
TGM1NL-630	1.34In	1.32In	1.3In	1.3In	1.25In	1.23In	1.18In	1.13In	1In	0.95In	0.93In	0.85In	0.82In	0.8In	0.78In
TGM1NL-800	1.34In	1.32In	1.3In	1.3In	1.25In	1.23In	1.18In	1.13In	1In	0.95In	0.93In	0.85In	0.82In	0.8In	0.78In

3.10 The influence of altitude changes on the circuit breaker characteristics sees Table 11

When the altitude exceeds 2000m, the electrical characteristics of the circuit breaker can be corrected according to the following Table .

Table 11

Altitude (mm)	2000	3000	4000	5000
Operating current correction coefficient	1In	0.94In	0.88In	0.85In
Insulation voltage (V)	1000	800	700	600
Power frequency withstand voltage (V)	3000	2500	2000	1800

4 Operating Conditions

4.1 Temperature

4.1.1 The ambient air temperature does not exceed +40°C, the lower limit is -5°C, and the mean temperature within 24h does not exceed +35°C.

4.1.2 Used in special environment: The lower limit of the temperature is not below -25°C, and the upper limit does not exceed +55°C.

4.1.3 When the ambient temperature is greater than +40°C or below -5°C, the derating is required according to the temperature compensation coefficient or contact us.

4.2 Altitude

4.2.1 The altitude at the installation site where the product works normally does not exceed 2000m.

4.2.2 If the altitude exceeds 2000m, the derating is required according to the altitude coefficient or contact us.

4.3 Humidity

4.3.1 The relative humidity of atmosphere does not exceed 50% at the maximum ambient temperature +40°C, and higher relative humidity can be allowed at lower temperatures

4.3.2 The maximum mean relative humidity does not exceed 90% in the wettest month, and the monthly mean minimum temperature in that month does not exceed +25°C.

4.3.3 The influence of the condensation occurred on the product surface due to temperature changes on the product performance shall be considered.

4.4 Pollution Degree: 3.

4.5 Installation category: III.

4.6 Installation condition: The vertical inclination of the installed circuit breaker does not exceed 5°.

4.7 External magnetic field: The magnetic field near the circuit breaker installation site shall not exceed 5 times earth's magnetic field in any direction.

TGM1NL Series Moulded Case Circuit Breaker with Earth Leakage Protection-A/AC Type

5 Product Accessories

The complete internal accessories and external accessories are provided for moulded case circuit breaker to satisfy the needs of different client.

5.1 Internal accessory code

Table 12

OF	1N	-	160	L	D	A2
Accessory code	Adaptive circuit breaker code		Frame current code	Insatllaiton position	Wire lead-out mode	Voltage grade
OF: Aux. contact SD: Alarm contact MN: Undervoltage release MX: Shunt release	1N:TGM1NL		160(125)、250、320、400、630、800	L: Left R: Right	Default: Direct lead out D: Terminal junction box	Default: No A1: AC220/230/240V A2: AC380/400/415V D1: DC24V D2: DC110V D3: DC220V

5.1.1 Aux. contact OF

● It is an accessory connected to the auxiliary circuit of circuit breaker to remotely indicate the ON or OFF / Trip state of the circuit breaker.

OF 1N - □ □ □ □

- Aux. contact code (1: One Normally open and one normally closed contact 2: Two open and one normally closed contacts)
- Wiring lead-out mode Default: Direct wire lead-out* D: Terminal junction box
- Installation location code L: left R: right
- Frame current
- Adaptive circuit breaker code 1N:TGM1NL
- Accessory code OF: Aux. contact

*Notes: 160 frame accessory shall be selected for TGM1NL-125 frame;
The default value of the direct wire lead-out length is 50cm; if other lengths are required, please specify it when ordering.
Example: The code of right auxiliary (10N10FF) with a terminal box of TGM1NL series 250 frame is as follows: OF1NL-250RD2.

● Wiring diagram

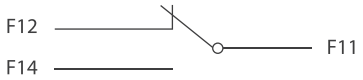

State of circuit breaker in the OFF position

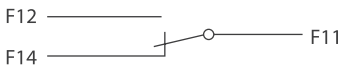

State of circuit breaker in the “ON” position

● Electrical characteristics

Table 13

Frame rated current	Inm≤320A		Inm≥400A	
Conventioinal current Ith	3A		6A	
Usage category	AC-15	DC-13	AC-15	DC-13
Rated operating current	0.3A	0.15A	1A	0.15A

TGM1NL Series Moulded Case Circuit Breaker with Earth Leakage Protection-A/AC Type

5.1.2 Undervoltage release MN

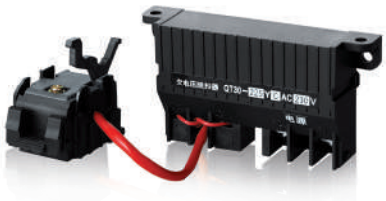

● It is used to realize the undervoltage protection function of circuit breaker to disconnect the circuit breaker when the power voltage is too low for protection of electric equipment

a When 35%-70% rated operating voltage, the undervoltage release can trip the circuit breaker reliably;

b When 85%-110% rated operating voltage, the undervoltage release can ensure that the circuit breaker is closed;

c When the rated operating voltage is below 35%, the undervoltage release can prevent the circuit breaker from being closed.

* Note: The undervoltage release must be powered on, and then the circuit breaker can re-trip and is closed, otherwise this may cause damage to the circuit breaker.

MN 1N – □ □ □ □

- Voltage code (see the Internal Accessory Code Table 12, only A1, A2 available)
- Wire lead-out mode
  - Default: Direct wire lead-out*
  - D: Terminal junction box
- Installation location code L: left R: right
- Frame current
- Adaptive circuit breaker code 1N:TGM1NL
- Accessory code MN: Undervoltage release

*Notes: 160 frame accessory shall be selected for TGM1NL-125 frame;
The default value of the direct wire lead-out length is 50cm; if other lengths are required, please specify it when ordering.
Example: The code of left undervoltage AC220V of TGM1NL series 250 frame (direct wire lead-out) is as follows: MN1NL-250LA1.

● Wiring diagram

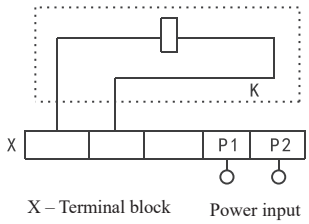

*Note: The wiring diagram of internal accessory of circuit breaker is marked in the dashed box.

● Electrical characteristics

Table 14

Product model	Starting current value (mA)		Power consumption (W)	
	AC415V	AC230V	AC415V	AC230V
TGM1NL-125/160	9.95	15.55	4.55	3.82
TGM1NL-250/320	10.88	15.83	4.85	3.92
TGM1NL-400	9.5	11.2	3.8	2.83
TGM1NL-630/800	5.4	7.75	2.7	1.85

TGM1NL Series Moulded Case Circuit Breaker with Earth Leakage Protection-A/AC Type

5.1.3 Alarm contact SD

● It is an accessory connected to the auxiliary circuit of circuit breaker indicate that the circuit breaker in the non-trip (ON or OFF) or trip (Trip) state

When the alarm contact issues a trip indication, there are four possibilities:

• With overload or short circuit fault • Test button trip

• With residual current fault • Shunt / undervoltage release works

SD 1N – □ □ □

- Wire lead-out mode
- Default: Direct wire lead-out *
- D: Terminal junction box
- Installation position code L: Left R: Right
- Frame current
- Adaptive circuit breaker code 1N: TGM1NL
- Accessory code SD: Alarm contact

*Notes: 160 frame accessory shall be selected for TGM1NL-125 frame;
The default value of the direct wire lead-out length is 50cm; if other lengths are required, please specify it when ordering.
Example: The code of the left alarm (direct wire lead-out) of TGM1NL series 250 frame is as follows: SD1NL-250L.

● Wiring diagram

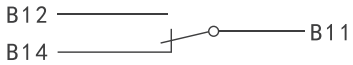

State of circuit breaker in the trip (alarm) position

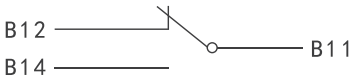

State of circuit breaker in the “OFF” or “ON” position

● Electrical characteristics

Table 15

Frame rated current	Inm≤320A		Inm≥400A	
Resistive current Ith	3A		6A	
Usage category	AC-15	DC-13	AC-15	DC-13
Rated operating current	0.3A	0.15A	1A	0.15A

TGM1NL Series Moulded Case Circuit Breaker with Earth Leakage Protection-A/AC Type

5.1.4 Shunt release MX

MX 1N – □ □ □ □

- Voltage code (see Internal accessory code Table 12)
- Wire lead-out mode
  - Default: Direct wire lead-out *
  - D: Terminal junction box
- Installation position code L: Left R: Right
- Frame current
- Adaptive circuit breaker code 1N: TGM1NL
- Accessory code MX: Shunt release

● Used to remotely open the circuit breaker

When the voltage is 70%-110% rated control power voltage Us, the shunt release can trip the circuit breaker reliably

*Notes: 160 frame accessory shall be selected for TGM1NL-125 frame;
The default value of the direct wire lead-out length is 50cm; if other lengths are required, please specify it when ordering.
Example: The code of the left shunt DC220V (direct wire lead-out) of TGM1NL series 250 frame is as follows: MX1NL-250LD3.

● Wiring diagram

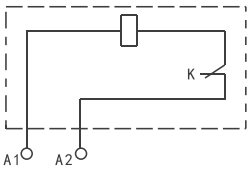

Power input

* Note:
K – The micro switch connected to the coil in series in the shunt release is a normally-closed contact; when the circuit breaker is OFF, this contact will open automatically, and is closed when in ON state.

When the control voltage is DC24V, the maximum length of copper wire meets the following requirements:

Table 16

Rated control power voltage Uc (DC24V) \ Sectional area of wire	1.5mm²	2.5mm²
AC220/230/240V	150m	250m
AC380/400/415V	100m	160m

If failed to meet the requirements of the above table, it is recommended to use the figure below in the design of the shunt controller circuit:

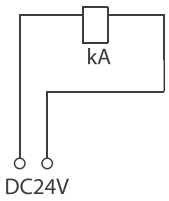

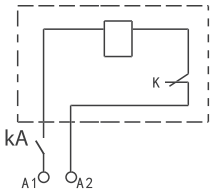

Power input

* Note: KA is DC24V intermediate relay, and the current capacity of contact is 1A.

● Electrical characteristics

Table 17

Product model	Starting current value (mA)				Power consumption (W)			
	AC400V	AC230V	DC220V	DC24V	AC400V	AC230V	DC220V	DC24V
TGM1NL-125/160	0.35	0.45	0.37	4.52	95.8	73	90.7	91.2
TGM1NL-250/320	0.42	0.48	0.39	4.51	112	68.8	90.7	85.3
TGM1NL-400	0.48	0.51	0.41	4.51	132	78.3	94.4	110
TGM1NL-630/800	0.54	0.85	1.21	5.51	163	153	158	120

TGM1NL Series Moulded Case Circuit Breaker with Earth Leakage Protection-A/AC Type

5.2 External accessory code

Table 18

CD2	1N	-	160	A2	
Accessory code	Adaptive circuit breaker code		Frame current code	Voltage grade	Number of poles code
AH: Round manual mechanism	1N:TGM1NL		160(125)、250、320、400、630、800	A1：AC220/230/240V A2：AC380/400/415V D1：DC24V D2：DC110V DC3：DC220V	Two poles: 2P Three poles: 3P Four poles: 4P
RH: Square manual mechanism					
CD2: AC and DC universal motor mechanism					
GP: Front-panel wiring transition plate					
GB: Phase partition					
BH: Back-panel wiring					
LS: Mechanical interlock					

5.2 External accessories

5.2.1 Manual mechanism RN/AH

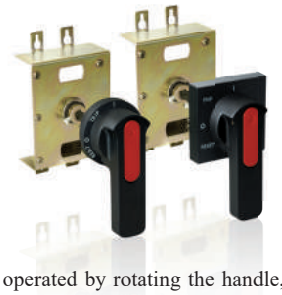

● The circuit breaker is operated by rotating the handle, and the rotary handle that comply with the ergonomic design is used to make more flexible operation of circuit breaker

There are two types of manual mechanism for TGM1NL series circuit breaker:

Direct rotary handle (round manual mechanism, square manual mechanism)

Extended rotary handle (round extended manual mechanism, square extended manual mechanism)

RH 1N – □

- □ — Frame current
- 1N — Adaptive circuit breaker code 1N: TGM1NL
- RH — Accessory code
  - AH: Round manual mechanism
  - RH: Square manual mechanism

*Note: 160 frame accessory shall be selected for TGM1NL-125 frame.

Example: The code of the round manual mechanism of TGM1NL series 250 frame is as follows: AN1NL-250.

● Outline dimensions of manual mechanism

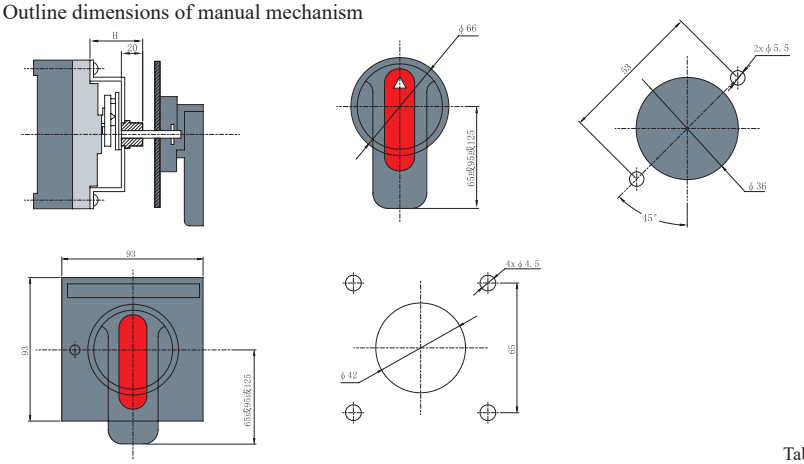

Table 19

Model & Spec.	TGM1NL-125/160	TGM1NL-250/320	TGM1NL-400	TGM1NL-630/800
Installation dimension (H)	61	57	87	87

TGM1NL Series Moulded Case Circuit Breaker with Earth Leakage Protection-A/AC Type

5.2.2 Motor mechanism CD2

- It is used for remote electric power-on, power-off and retip, and automation control application of circuit breaker

CD2 1N – □ □

- Voltage code (see External Accessories Code Table 18)
- Frame current
- Adaptive circuit breaker code 1N:TGM1NL
- Accessory code CD2: AC/DC universal motor mechanism

*Notes: 160 frame accessory shall be selected for TGM1NL-125 frame;
The default value of the direct wire lead-out length is 50cm; if other lengths are required, please specify it when ordering.
Example: The code of the motor mechanism AC380V of TGM1NL series 250 frame is as follows: CD21NL-250A2.

- Electrical Characteristics and Wiring Diagram

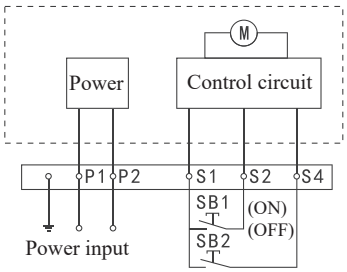

*Note:
K – The micro switch connected to the coil in series in the shunt release is a normally-closed contact; when the circuit breaker is OFF, this contact will open automatically, and is closed when in ON state.

P1 and P2 are external power inputs

SB1 and SB2 are operation buttons (provided by user)

- Outline and Installation Dimensions

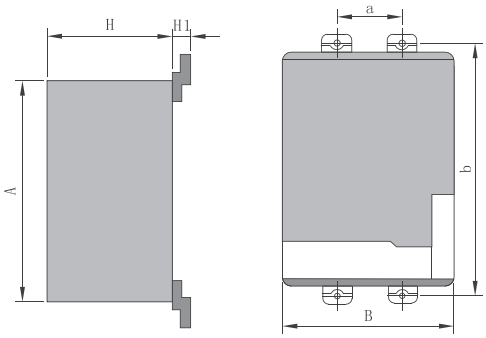

Table 20

Model	A	B	H	H1	a	b
TGM1NL-125/160	116	90	77	22	30	129
TGM1NL-250/320	116	90	77	17	35	126
TGM1NL-400	176	130	115	24	44	194
TGM1NL-630/800	176	130	115	17	70	243

TGM1NL Series Moulded Case Circuit Breaker with Earth Leakage Protection-A/AC Type

5.2.3 Front-panel wiring transition plate GP

- It is used to ensure the more flexible wiring mode of circuit breaker. With this accessory added, the phase spacing is increased, and the safety between the lines is improved.

GP 1N – □ □

- Number of poles code
  - 2P: Two poles 3P: Three poles
  - 4P: Four poles
- Frame current
- Adaptive circuit breaker code 1NL: TGM1NL
- Accessory code GP: Front-panel wiring transition plate

*Note: 160 frame accessory shall be selected for TGM1NL-125 frame.
Example: The code of the 3P transition plate of TGM1NL series 250 frame is as follows: GP1NL-2503P.

5.2.4 Phase partition GB

- It can be used to enhance the insulation performance of the interphase conductor, and can be installed in the slot on the front side even when the switch is installed

GB 1N – □ □

- Number of poles code
  - 2P: Two poles 3P: Three poles
  - 4P: Four poles
- Frame current
- Adaptive circuit breaker code 1N:TGM1NL
- Accessory code GB: Phase partition

*Note: 160 frame accessory shall be selected for TGM1NL-125 frame.
The phase partition is provided as standard configuration; for one circuit breaker, (two pieces for two-pole, four pieces for three-pole, and six pieces for four-pole).
Example: The code of the 3P phase partition of TGM1NL series 250 frame is as follows: GP1NL-2503P.

5.2.5 Back-panel wiring BH

- It is used to ensure more flexible wiring mode of circuit breaker; with this accessory added, the back-panel wiring connection can be realized

BH 1N – □ □

- Number of poles code
  - 2P: Two poles
  - 3P: Three poles
  - 4P: Four poles
- Frame current
- Adaptive circuit breaker code 1N:TGM1NL
- Accessory code BH: Back-panel wiring

* Note: 160 frame accessory shall be selected for TGM1NL-125 frame.
Example: The code of the 3P back-panel of TGM1NL series 250 frame is as follows: BH1NL-2503P.

TGM1NL Series Moulded Case Circuit Breaker with Earth Leakage Protection-A/AC Type

5.2.6 Mechanical interlock LS

LS 1N – □ □

- Number of poles code
  - 2P: Two poles
  - 3P: Three poles
  - 4P: Four poles
- Frame current
- Adaptive circuit breaker code 1N:TGM1NL
- Accessory code LS: Mechanical interlock

● It is used to realize the interlock of two circuit breakers and to prevent them from closing simultaneously

* Note: 160 frame accessory shall be selected for TGM1NL-125 frame. Example: The code of the 3P mechanical interlock of TGM1NL series 250 frame is as follows: LS1Nl-2503P.

5.3 Leakage alarm module

The leakage alarm module is used to indicate an alarm through the light-emitting diode. When the light-emitting diode emits red light, this indicates that the system leakage exceeds the set value, at this time the normally open contact is converted into a normally closed state, and the normally closed contact is converted into a normally open state

● It is primarily used in some special applications to ensure the power supply can work continuously in the event of an emergency such as electric leakage; after receiving the leakage alarm signal, users can find out the reason of leakage fault appropriately according to the needs for troubleshooting.

● Input voltage: AC220/230V, AC380/400V, DC24V

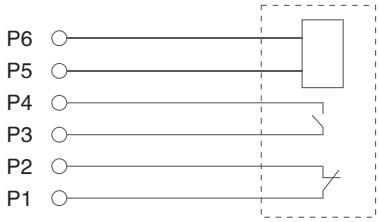

Description:
P5-P6: input power;
P1 and P2 are the common terminals, and P2 is a normally closed contact, P4 is a normally open contact; the contact capacity is 0.5A/AC250V.

Note: The wiring diagram of the internal accessory of leakage alarm module is marked in the dashed box.

TGM1NL Series Moulded Case Circuit Breaker with Earth Leakage Protection-A/AC Type

6 Structure and Working Principle

6.1 Structure

This series circuit breaker is an electronic type current operated type leakage protector, and its main parts include main switch (including overcurrent release), zero sequence current transformer, electronic amplifier parts, and test device. All parts are installed in a moulded case.

6.2 Working Principle

In the event of an electric leakage or an electric shock in the protected circuit, a signal is output from the zero sequence current transformer. When this signal output reaches a certain value, the silicon controlled rectifier will be triggered and conducted to activate the leakage release, thereby driving the traction rod to disconnect the operating mechanism in a very short time to cut off power supply, so that the leakage protection is realized. (Working principle sees Fig. 1).

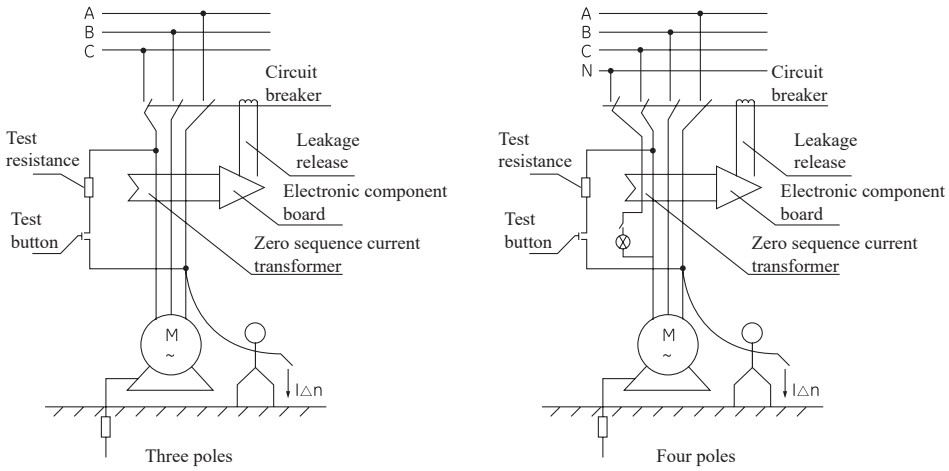

Fig. 1 Working principle

TGM1NL Series Moulded Case Circuit Breaker with Earth Leakage Protection-A/AC Type

7 Outline and Installation Dimensions

The outline dimensions of circuit breaker and the size of hole on the panel are shown in figure below and table 21, and the wiring dimensions and installation dimensions are shown in figure below and table 22.

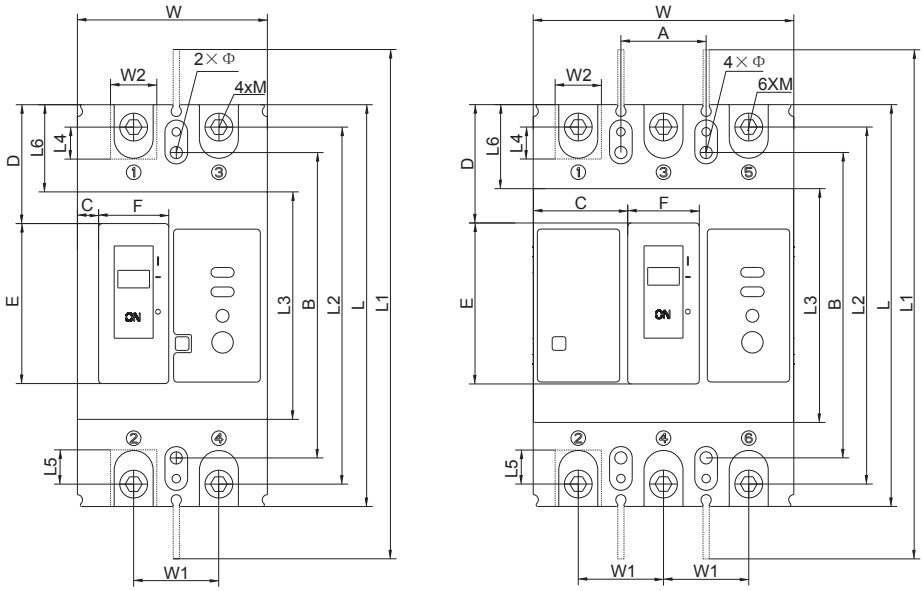

TGM1NL Series Moulded Case Circuit Breaker with Earth Leakage Protection-A/AC Type

7.1 Circuit breaker outline dimensions and panel hole size table 21

Table 21

Product spec.	Model	Number of poles	Outline dimensions (mm)					Size of hole on panel (mm)						
			W	L	L1	H	H1	C	D	E	F	L3	L6	H4
TGM1NL-125/160	L	2P	62	151	265	103	64	3	41	69	26	97	27.5	12
		3P	93	151	265	103	64	33	41	69	26	97	27.5	12
		4P	123	151	265	103	64	33	41	69	26	97	27.5	12
TGM1NL-125/160	M	2P	62	151	265	118	82	3	41	69	26	97	27.5	12
		3P	93	151	265	118	82	33	41	69	26	97	27.5	12
		4P	123	151	265	118	82	33	41	69	26	97	27.5	12
TGM1NL-250/320	L	2P	78	165	302	103	69	9	49	66	29	97	35	10
		3P	107	165	302	103	69	39	49	66	29	97	35	10
		4P	142	165	302	103	69	39	49	66	29	97	35	10
TGM1NL-250/320	M	2P	78	165	302	119	85	9	49	66	29	97	35	10
		3P	107	165	302	119	85	39	49	66	29	97	35	10
		4P	142	165	302	119	85	39	49	66	29	97	35	10
TGM1NL-400	L、M	3P	150	257	469	154	98	46	71	110	59	155	51	15
		4P	198	257	469	154	98	46	71	110	59	155	51	15
TGM1NL-630/800	L、M	3P	210	280	497	160	103	75	83	105	60	176	52	15
		4P	280	280	497	160	103	75	83	105	60	176	52	15

7.2 Circuit breaker wiring dimensions and installation dimensions table 22

Table 22

Product spec.	Model	Number of poles	Outline dimensions (mm)					Size of hole on panel (mm)						
			H2	H3	W1	W2	L2	L4	L5	M	A	B	Φ	H5
TGM1NL-125/160	L	2P	25	25	30	18	133	8.5	8.5	M8	/	129	5	28
		3P	25	25	30	18	133	8.5	8.5	M8	30	129	5	28
		4P	25	25	30	18	133	8.5	8.5	M8	60	129	5	28
TGM1NL-125/160	M	2P	29	29	30	18	133	8.5	8.5	M8	/	129	5	28
		3P	29	29	30	18	133	8.5	8.5	M8	30	129	5	28
		4P	29	29	30	18	133	8.5	8.5	M8	60	129	5	28
TGM1NL-250/320	L	2P	25.5	24.5	35	26	147	13.8	13.8	M8	/	126	5	44
		3P	25.5	24.5	35	26	147	13.8	13.8	M8	35	126	5	44
		4P	25.5	24.5	35	26	147	13.8	13.8	M8	70	126	5	44
TGM1NL-250/320	M	2P	21.5	21.5	35	26	147	13.8	13.8	M8	/	126	5	60
		3P	21.5	21.5	35	26	147	13.8	13.8	M8	35	126	5	60
		4P	21.5	21.5	35	26	147	13.8	13.8	M8	70	126	5	60
TGM1NL-400	L	3P	38.5	38	48	33	224	14.5	14.5	M10	44	194	8	67
		4P	38.5	38	48	33	224	14.5	14.5	M10	94	194	8	67
TGM1NL-400	M	3P	39.5	38	48	33	224	14.5	14.5	M10	44	194	8	67
		4P	39.5	38	48	33	224	14.5	14.5	M10	94	194	8	67
TGM1NL-630/800	L、M	3P	41	41	70	45	243	15.5	14.7	M12	70	243	7	70
		4P	41	41	70	45	243	15.5	14.7	M12	140	243	7	70

TGM1NL Series Moulded Case Circuit Breaker with Earth Leakage Protection-A/AC Type

7.3 The outline and installation dimensions of the plug-in product see Table 23

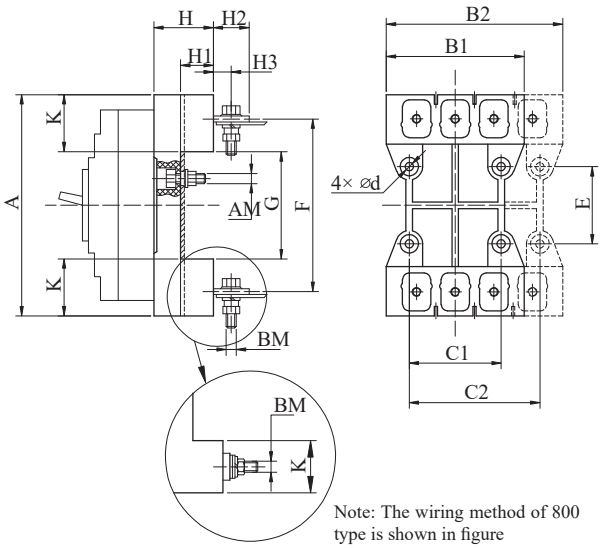

Note: The wiring method of 800 type is shown in figure

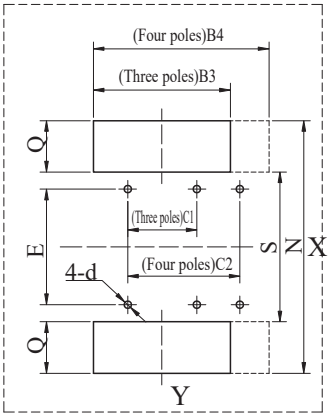

Table 23

Model	Outline and installation dimensions (mm)											
	A	B1	B2	C1	C2	E	F	G	K	H	H1	H2
TGM1NL-125/160	168	91	125	60	90	57	132	92	38	50	33	28
TGM1NL-250/320	186	107	145	70	105	54	145	94	46	50	33	37
TGM1NL-400	280	149	200	60	108	129	224	170	55	60	38	46
TGM1NL-630/800	305	210	280	90	162	146	243	181	62	87	60	22

Model	Outline and installation dimensions (mm)								
	H3	N	S	Q	B3	B4	AM	BM	4-d
TGM1NL-125/160	19	178	82	48	101	135	M6	M8	φ6.5
TGM1NL-250/320	20	196	84	56	117	155	M6	M8	φ6.5
TGM1NL-400	24	290	160	65	159	210	M8	M12	φ8.5
TGM1NL-630/800	/	315	171	72	220	290	M10	M12(T)	φ11

TGM1NL Series Moulded Case Circuit Breaker with Earth Leakage Protection-A/AC Type

8 Ordering Notice

Please specify the following items when ordering:

a) The model, name, and number of poles of the circuit breaker.

b) The rated current of the circuit breaker.

c) Rated residual operating current and breaking time.

d) Accessory name, specification, combination code of circuit breaker: When the undervoltage release and shunt release are used, please specify the voltage value of the operating voltage (or control power voltage).

e) Purpose: For power distribution (power distribution application by default), for motor protection (indicated by 2).

f) Quantity.

For example: TGM1NL-125, three-pole four-wire, A type, L type circuit breaker for power distribution protection, complex release, rated current 100A, rated residual operating current 100mA/300mA/500mA, non-delay type, 200 units.

Please specify: TGM1NL-125L/3N300A 100A 100mA/300mA/500mA 200 units.

For special requirements for circuit breakers, please contact the manufacturer.

TGM3L Series Moulded Case Circuit Breaker with Earth Leakage Protection-A/AC Type

1. Switch body
2. Flame extinguishing chamber (selected and purchased by customer)
3. Plug-in type (selected and purchased by customer)
4. Arc isolating sheet (standard)
5. Zero flashover hood (selected and purchased by customer)
6. Undervoltage release (selected and purchased by customer)
7. Shunt release (selected and purchased by customer)
8. Alarm contacts (selected and purchased by customer)
9. Aux. contacts (selected and purchased by customer)
10. Leakage alarm module (selected and purchased by customer)
11. Front-panel transition plate (selected and purchased by customer)
12. Motor mechanism (selected and purchased by customer)
13. Rotary handle operating mechanism (selected and purchased by customer)

5

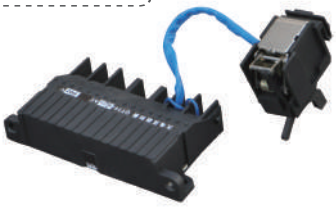

6

7

13

12

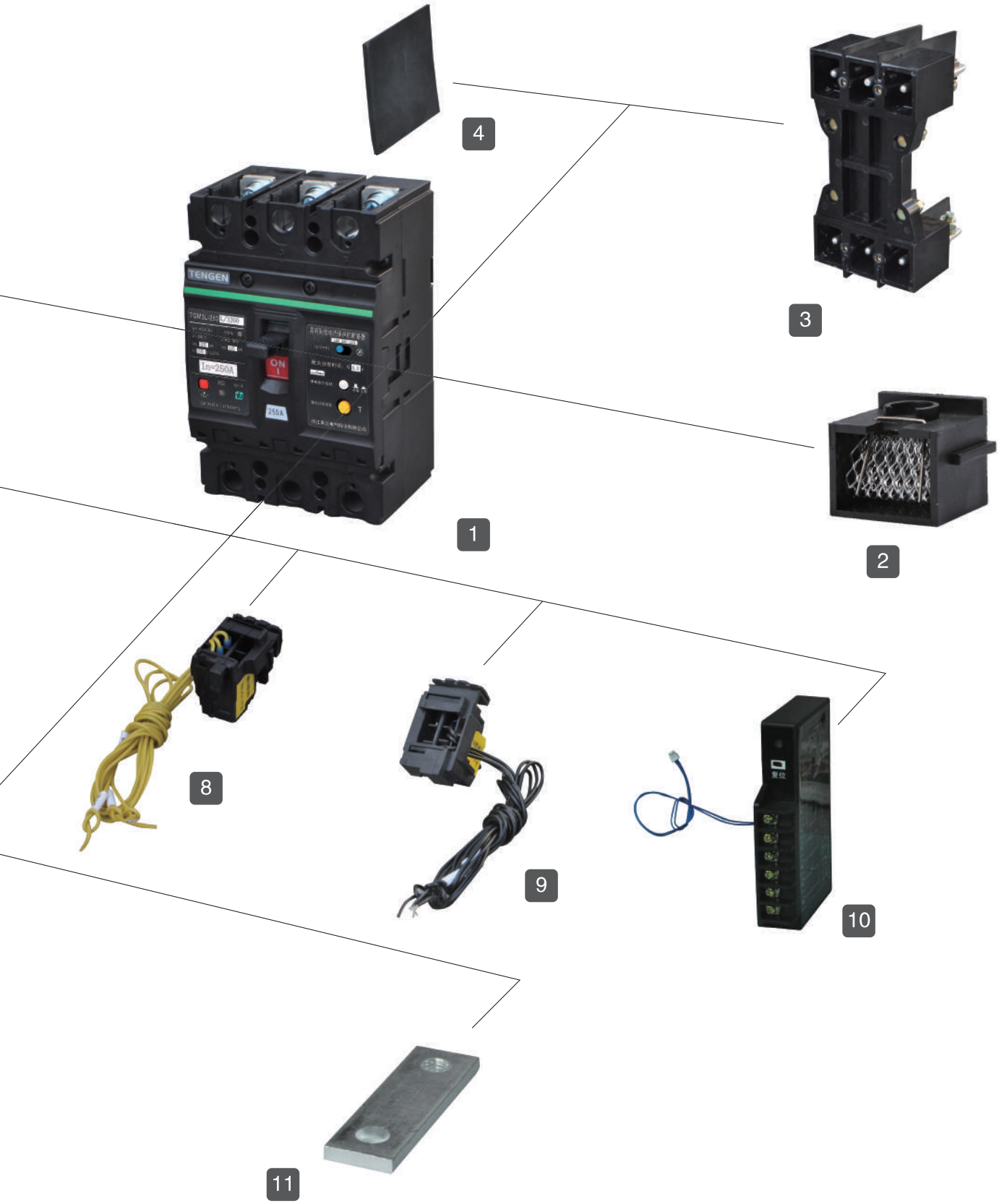
4
3
TENGEN
ON
250A
1
2
8
9
10
11

TGM3L Series Moulded Case Circuit Breaker with Earth Leakage Protection-A/AC Type

1 Overview

TGM3L Series Moulded Case Circuit Breaker with Earth Leakage Protection-A/AC Type (hereinafter referred to as circuit breaker) is one of the new circuit breakers researched and developed by our company using international advanced technology. It has the characteristics of zero flashover, high breaking capacity, box type accessory, Small volume and compact structure, and green environmental protection.

Circuit breaker is divided into L type (standard type), M type (middle breaking type), and H type (high breaking type) according to their rated ultimate short-circuit breaking capacity (ICU), and is an ideal product for power distribution and motor protection. With the rated insulation voltage 800V, it is used in the AC 50Hz circuit with the rated operating voltage 400V and below and with the rated current from 16A to 800A to provide indirect personal contact protection and prevent a fire risk caused by the earthing fault current due to the damaged equipment insulation; the product can be used to distribute electrical energy and protect lines and power equipment to prevent overload and short circuit damage, and also be used for infrequent conversion of lines and infrequent startup of motor.

This series of circuit breakers can be installed vertically (that is longitudinally installed) or horizontally (that is laterally installed).

This circuit breaker can work normally under the conditions that any phase of three-phase power supply is open.

With isolation function, the corresponding symbol is: .

Circuit breakers comply with the following standards:

IEC 60947-1 "Low-voltage switchgear and controlgear - Part 1: General rules".

IEC 60947-2 "Low-voltage switchgear and controlgear - Part 2: Circuit breakers".

Certificates: CE CB

2 Type Designation

TG M 3 L –□ □□□/□□□□□□□□□□□□□□□□

- Special requirements
- Application code: No code: conventional type
- Purpose code (no code - with flashover distance, W- zero flashover)
- Installation method code: No code: Fixed type front-panel; B-Fixed type back-panel; C-Plug-in type
- Accessory voltage
- Breaking time
- Residual operating current
- Rated current
- Alarm module: Leakage alarm and trip: I; Leakage alarm and non-trip: II
- Additional information: F-Prepaid
- Four-pole product code (see Table 1); no code: Three-pole product
- Use code: No code: Power distribution; 2: Motor protection
- Release type and accessory code (see Table 2)
- Number of poles: 3-three poles; 3N-three-pole four-wire; 4-Four poles
- Operation method code: No code: Operation directly via handle; P: Operation via motor Z: Operation via rotary handle (for switchgear)
- Breaking capacity: L:low breaking(standard) M:medium breaking H:high breaking
- Frame rated current
- Residual current operation type: No code: AC type; A – A type
- With residual current protection
- Design code
- Moulded case circuit breaker
- Enterprise code

Table 1

Code	Description	Example
A type	N pole is not equipped with an overcurrent trip element, and the N pole is always closed and is open and closed not together with other three poles	3N300A
B type	N pole is not equipped with an overcurrent trip element, and the N pole is open and closed together with other three poles (N pole is first closed and then open)	4300B
C type	N pole is equipped with an overcurrent trip element, and the N pole is open and closed together with other three poles (N pole is first closed and then open)	4300C
D type	N pole is equipped with an overcurrent trip element, and the N pole is always closed and is open and closed not together with other three poles	3N300D

Note: No code is available for 3-pole product; 3N corresponds to A type and D type, and 4P corresponds to B type and C type.

TGM3L Series Moulded Case Circuit Breaker with Earth Leakage Protection-A/AC Type

Four-pole product code views

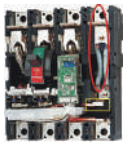

A type: N pole is not equipped with an overcurrent trip element, and the N pole is always closed and is open and closed not together with other three poles.

Without overcurrent release

B type: N pole is not equipped with an overcurrent trip element, and the N pole is open and closed together with other three poles (N pole is first closed and then open)

Without overcurrent release

C type: N pole is equipped with an overcurrent trip element, and the N pole is open and closed together with other three poles (N pole is first closed and then open)

With overcurrent release

D type: N pole is equipped with an overcurrent trip element, and the N pole is always closed, and is open and closed not together with other three poles.

With overcurrent release

Release and Accessory Code

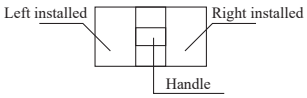

Alarm contact ● Aux. contact ○

Shunt release ■ Undervoltage release ▲

Table 2

Accessory name	Accessory code		Accessory installation and lead-out mode					
	Electrom-agnetic release	Complex release	TGM3L-125		TGM3L-250		TGM3L-400 TGM3L-630 TGM3L-800	
			3P	4P	3P	4P	3P	4P
No accessory	200	300						
Alarm contact	208	308						
Shunt release	210	310						
Aux. contact	220	320						
Undervoltage release	230	330						
Shunt release Aux. contact	240	340						
Shunt release Undervoltage release	250	350						
Two sets of aux. contacts	260	360						
Aux. contact Undervoltage release	270	370						
Shunt release Alarm contact	218	318						
Aux. contact Alarm contact	228	328						
Undervoltage release Alarm contact	238	338						
Shunt release Aux. contact Alarm contact	248	348						
Two sets of aux. contacts Alarm contact	268	368						
Undervoltage release Aux. contact Alarm contact	278	378						

*Notes:

1. 200 (electromagnetic release), refer to the circuit breaker body only with an electromagnetic release; that is, there is only a short circuit protection and no overload protection characteristic;
2. 300 (complex release), refer to the circuit breaker body with a thermodynamic + electromagnetic release; that is: with overload and short circuit protection characteristic;

TGM3L Series Moulded Case Circuit Breaker with Earth Leakage Protection-A/AC Type

5 Circuit Breaker Protection Characteristic Curve

TGM3L-125(L/M/H) time / current characteristic curve

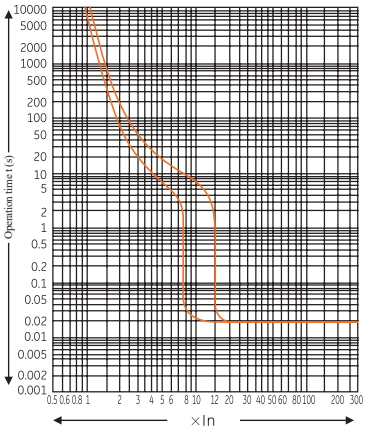

TGM3L-250(L/M/H) time / current characteristic curve

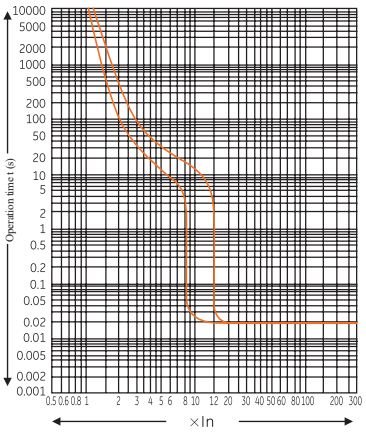

TGM3L-400(L/M/H) time / current characteristic curve

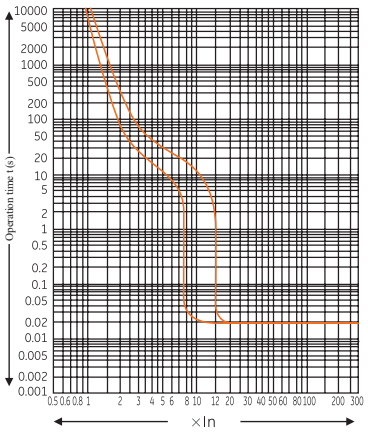

TGM3L Series Moulded Case Circuit Breaker with Earth Leakage Protection-A/AC Type

TGM3L-630(L/M/H) time / current characteristic curve

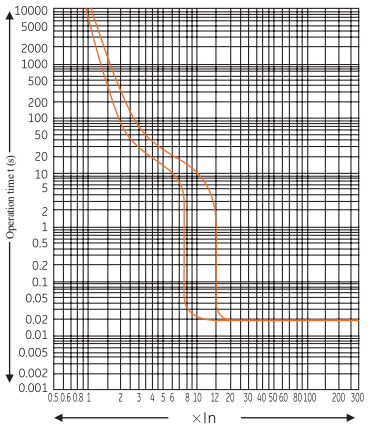

TGM3L-800(L/M/H) time / current characteristic curve

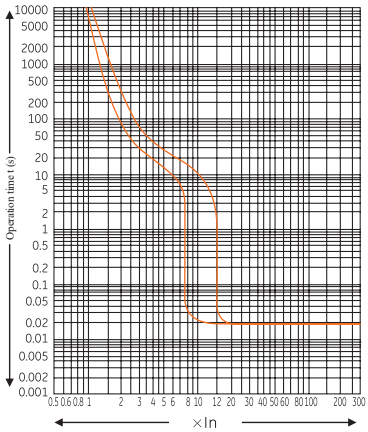

6 Correction Coefficient of Circuit Breaker in Special Environment

6.1 Derating coefficient due to ambient temperature changes sees Table 8

Table 8

Ambient temp. / Coefficient / Model	+40℃	+45℃	+50℃	+55℃	+60℃
	Derating coefficient	Derating coefficient	Derating coefficient	Derating coefficient	Derating coefficient
TGM3L-125	1In	0.95In	0.89In	0.84In	0.76In
TGM3L-250	1In	0.95In	0.90In	0.87In	0.82In
TGM3L-400	1In	0.94In	0.87In	0.81In	0.73In
TGM3L-630	1In	0.93In	0.88In	0.83In	0.76In
TGM3L-800	1In	0.92In	0.86In	0.81In	0.75In

6.2 The influence of the altitude changes on the characteristics of circuit breaker sees Table 9
When the altitude exceeds 2000m, the electrical performance of circuit breaker can be corrected according to the table below.

Table 9

Altitude	2000m	3000m	4000m	5000m
Power frequency withstand voltage	3000V	2500V	2000V	1800V
Operating current correction coefficient	1	0.94	0.88	0.83

TGM3L Series Moulded Case Circuit Breaker with Earth Leakage Protection-A/AC Type

7 Structure and Working Principle

7.1 Structure

This series circuit breaker is an electronic type current operated type leakage protector, and its main parts include main switch (including overcurrent release), zero sequence current transformer, electronic amplifier parts, leakage release, and test device. All parts are installed in a moulded case.

7.2 Working Principle

In the event of an electric leakage or an electric shock in the protected circuit, a signal is output from the zero sequence current transformer. When this signal output reaches a certain value, the silicon controlled rectifier will be triggered and conducted to activate the leakage release, thereby driving the traction rod to disconnect the operating mechanism in a very short time to cut off power supply, so that the leakage protection is realized. (Working principle sees Fig. 1).

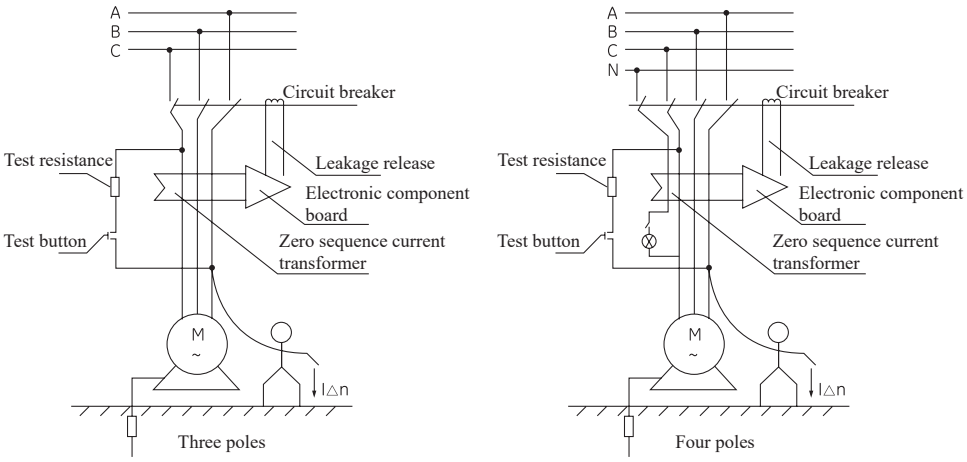

Fig. 1 Working principle

8 Product Accessories

8.1 Product Internal Accessories

According to the user's needs, the circuit breaker accessory can be directly led out (the length of the wire lead is 50cm, and any special requirements shall be specified when ordering), or a terminal block is added (if the wiring terminal block is required, please specify this when ordering).

TGM3L Series Moulded Case Circuit Breaker with Earth Leakage Protection-A/AC Type

● Shunt release (with left installed and left installed)

Rated control supply voltage (Us)	AC: AC220/230V, AC380/400V DC: DC24V, DC110V, DC220V
Operating voltage	(0.7~1.1)Us
Wiring diagram: 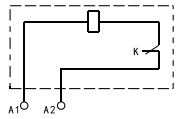 Power input	Note: K - The micro switch connected to the coil in series in the shunt release is a normally-closed contact; when the circuit breaker is OFF, this contact will open automatically, and is closed when in ON state.

When the rated control power supply voltage is DC24V, the shunt release can be used directly, but the maximum length of 1.5mm2 copper wire (each of the two wires) should be 150m, and of the 2.5mm^2 copper wire is 250m; the power supply power at the release terminal must the minimum 50W requirements, or the DC24V intermediate relay is used to control AC230V or AC400V shunt release; the contact capacity of the intermediate relay is not less than 1A.

● Undervoltage release (left installed and right installed)

Rated operating voltage (Ue)	AC: AC220/230V, AC380/400V
Operation characteristics	Trip reliably at 35%~70% rated operating voltage; closed when 85%~110%; prevent being closed when below 35%.
Wiring diagram: 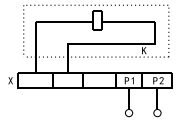 Power input	Description: X-Wiring terminal block Note: The wiring diagram of the internal accessories of circuit is marked in the dashed box.

Warning: The undervoltage release must be energized and then the circuit breaker can re-trip and is closed, otherwise this may cause damage to the circuit breaker.

● Aux. contact (left installed and right installed)

Frame rated current	Inm≤250A		Inm≥400A	
Resistive current Ith	3A		6A	
Usage category	AC-15	DC-13	AC-15	DC-13
Operating voltage	AC380V/400V	DC220V/230V	AC380V/400V	DC220V/230V
Rated operating current	0. 3A	0. 15A	1A	0. 15A

Wiring diagram:

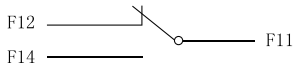

State of circuit breaker in "OFF" position

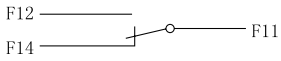

State of circuit breaker in "ON" position

TGM3L Series Moulded Case Circuit Breaker with Earth Leakage Protection-A/AC Type

● Alarm contact (left installed and right installed)

Resistive current Ith	3A
Rated operating current Ie	Same as aux. contact

Wiring diagram:

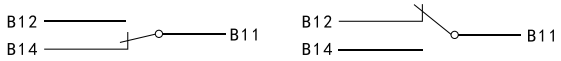

State of circuit breaker in "Trip" (Alarm) position

State of circuit breaker in "OFF" or "ON" position

8.2 Product External Accessories

● Motor mechanism:
This accessory is installed on the panel of circuit breaker to electrically control the ON, OFF, and re-trip operations of circuit breaker remotely, suitable for automation control application. The outline dimensions of motor mechanism see Table 10.

Input voltage	AC220V/230V, AC380V/400V
Wiring diagram	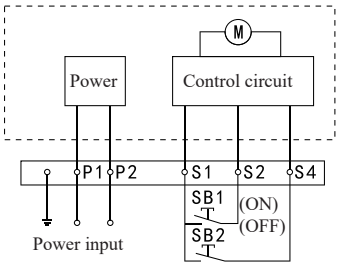 Description: P1 and P2 are external power inputs SB1 and SB2 are operation buttons (provided by user) Note: The wiring diagram of the internal accessory of motor mechanism is marked in the dashed box.

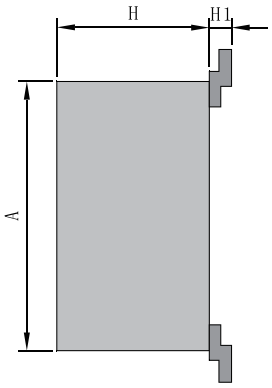

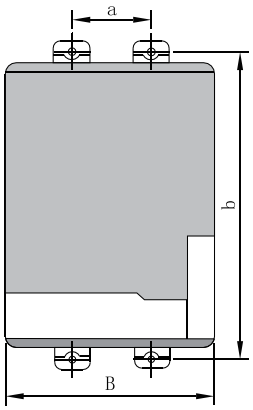

Table 10

Model	A	B	H	H1	a	b
TGM3L-125	116	90	77	22	30	129
TGM3L-250	116	90	77	17	35	126
TGM3L-400	176	130	115	24	44	194
TGM3L-630/800	176	130	115	27	70	243

TGM3L Series Moulded Case Circuit Breaker with Earth Leakage Protection-A/AC Type

● Manual mechanism

The outline and installation dimensions of rotary handle see Table 11

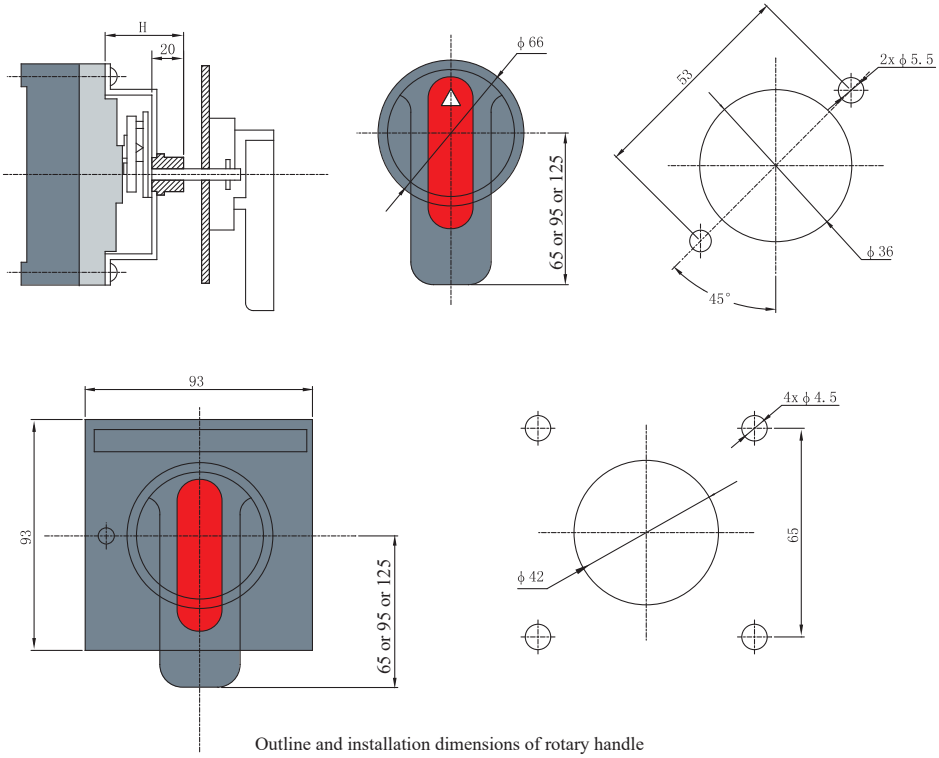

Outline and installation dimensions of rotary handle

Table 11

Model & Spec.	TGM3L-125	TGM3L-250	TGM3L-400	TGM3L-630/800
Installation dimensions (H)	61	59	87	97

● Leakage alarm module:

Input voltage	AC220/230V、AC380/400V、DC24V
	Wiring diagram: 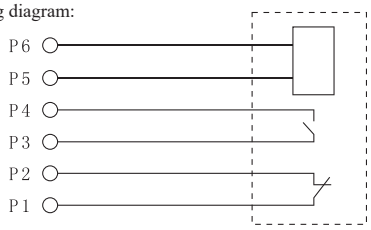 Description: P5-P6: Input power; P1-P2, P3-P4: Contact capacity AC230V, 5A. Note: The wiring diagram of the internal accessory of leakge alarm module is marked in the dashed box.

TGM3L Series Moulded Case Circuit Breaker with Earth Leakage Protection-A/AC Type

9 Outline and Installation Dimensions

9.1 The outline and installation dimensions of the product see Table 12 and Fig. 1

Table 12

Model	Number of poles	Outline dimensions (mm)												
		L	L1		L2	L4	L5	W	W1	W2	H	H1	H2	H3
			Non-zero flashover	Zero flashover										
TGM3L-125L	3	151.5	253	268	132	8	164	93	30	18	99	65	25	3
	4							123						
TGM3L-125M	3							93			116	82	28	
	4							123						
TGM3L-125H	3							93						
	4							123						
TGM3L-250L	3	165	300	315	146	12	180	107	35	23.5	100	69	25	4
	4							142						
TGM3L-250M	3							107			116	85	23	
	4							142						
TGM3L-250H	3							107						
	4							142						
TGM3L-400L	3	257	465	493	224	13	285	150	48	33	150	99	39	5
	4							198						
TGM3L-400M	3							150						
	4							198						
TGM3-400H	3							150						
	4							198						
TGM3L-630L	3	281	496	518	243	15	303	212	70	45	155	103	40	6
	4							282						
TGM3L-630M	3							212						
	4							282						
TGM3L-630H	3							212						
	4							282						
TGM3L-800L	3	281	496	518	243	15	303	212	70	45	155	103	40	6
	4							282						
TGM3L-800M	3							212						
	4							282						
TGM3L-800H	3							212						
	4							282						

TGM3L Series Moulded Case Circuit Breaker with Earth Leakage Protection-A/AC Type

Table 12, continued

Model	Number of poles	Outline dimensions (mm)											Installation dimensions (mm)		
		H4	H5	H6	H7	A	B	C	D	E	F	G	L3	W3	φd
TGM3L-125L	3	25	3	/	78	96	66	33	32	28	16	30	129	30	Φ4.5
	4													60	
TGM3L-125M	3	28			97									30	
	4													60	
TGM3L-125H	3													30	
	4													60	
TGM3L-250L	3	25	4	4	79	97	67	31	37	33	14	35	125	35	Φ5
	4													70	
TGM3L-250M	3	23			95									35	
	4													70	
TGM3L-250H	3													35	
	4													70	
TGM3L-400L	3	38	2.5	5	114	155	109	46	46	58	20	44	194	44	Φ8
	4											94		94	
TGM3L-400M	3											44		44	
	4											94		94	
TGM3-400H	3											44		44	
	4											94		94	
TGM3L-630L	3	41	5	6	121	175	115	66	72	66	33	70	243	70	Φ7
	4													140	
TGM3L-630M	3													70	
	4													140	
TGM3L-630H	3													70	
	4													140	
TGM3L-800L	3	41	5	6	121	175	115	66	72	66	33	70	243	70	Φ7
	4													140	
TGM3L-800M	3													70	
	4													140	
TGM3L-800H	3													70	
	4													140	

TGM3L Series Moulded Case Circuit Breaker with Earth Leakage Protection-A/AC Type

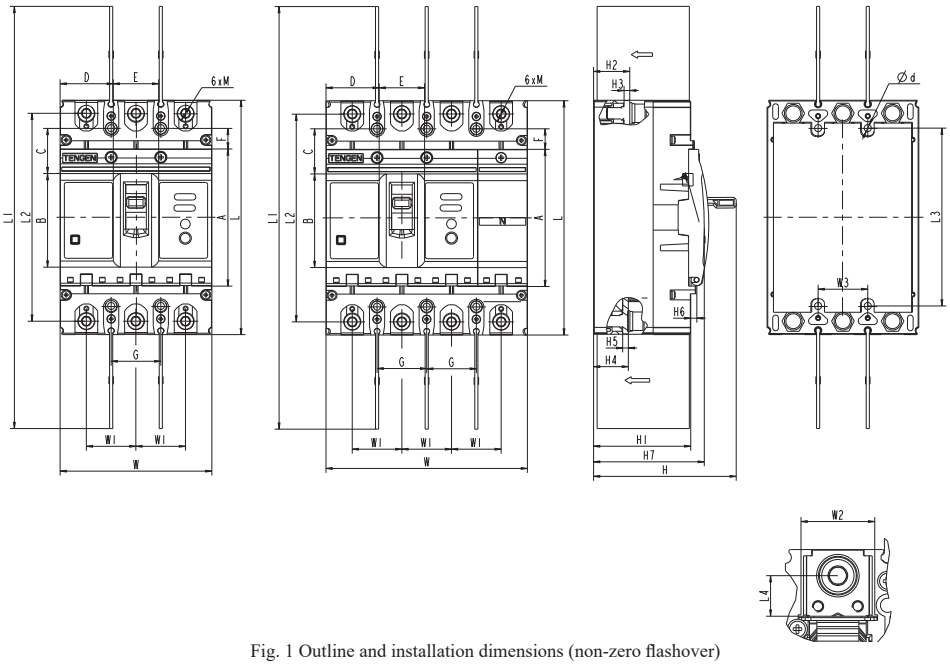

Fig. 1 Outline and installation dimensions (non-zero flashover)

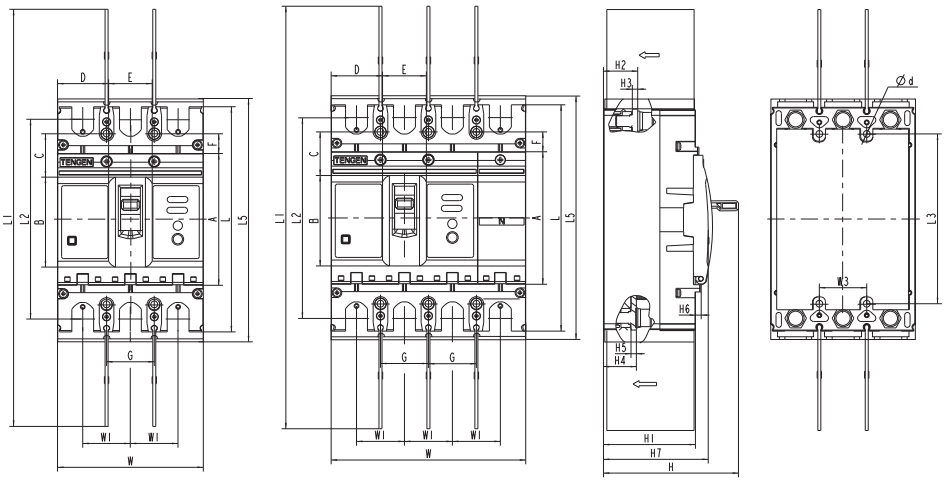

Fig. 2 Outline and installation dimensions (zero flashover)

TGM3L Series Moulded Case Circuit Breaker with Earth Leakage Protection-A/AC Type

9.2 The outline and installation dimensions of the front-panel plug-in type see Fig. 3 and Table 13:

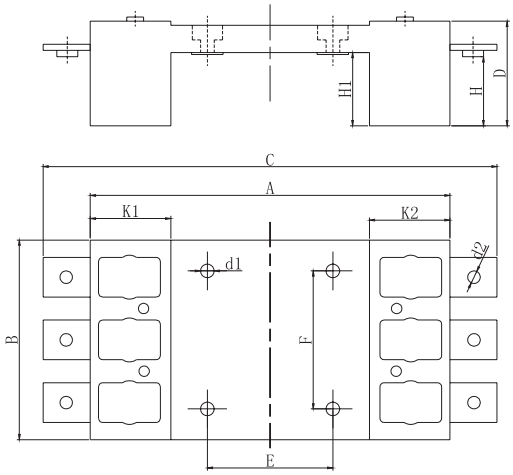

Fig. 3 Front-panel plug-in type outline and installation dimensions

Table 13

Model & Spec.	Installation dimensions											
	A	B	C	D	E	F	H	H1	K1	K2	d1	d2
TGM3L-125	172	96	217	50	60	66	13	35	38	38	7	Φ8
TGM3L-250	183	110	261	51.5	64	70	42.5	35	44	44	7	Φ8
TGM3L-400	276	150	352	80	135	115	31	Flat	Flat	Flat	8.5	Φ11
TGM3L-630/800	305	210	409	87	144	90	16	61	62	62	11	Φ13

9.3 The outline and installation dimensions of the back-panel plug-in type see Fig. 4 and Table 14:

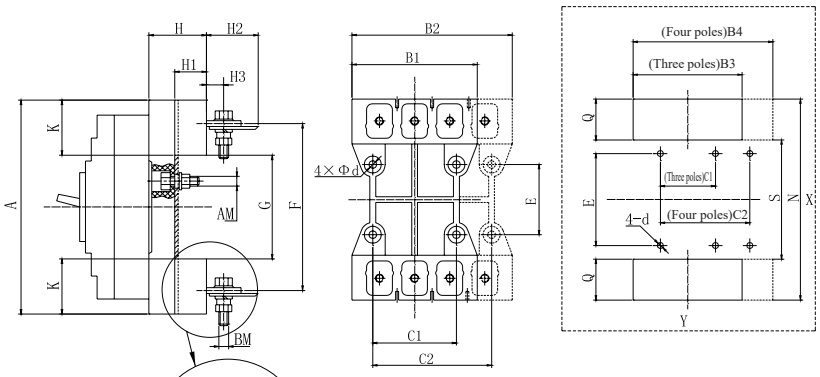

Note: The wiring method of 630/800 type is shown in figure

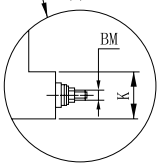

Size of hole on the mounting plate (unit: mm)

Fig. 4 Outline and installation dimensions for back-panel plug-in type

Table 14

Model & Spec.	Outline and installation dimensions (mm)																			
	A	B1	B2	C1	C2	E	F	G	K	H	H1	H2	N	S	Q	B3	B4	AM	BM	4-d
TGM3L-125	168	91	125	60	90	60	132	92	38	50	33	28	178	82	48	101	135	M6	M8	Φ6.5
TGM3L-250	186	107	145	70	105	54	145	94	46	50	33	37	196	84	56	117	155	M6	M8	Φ6.5
TGM3L-400	280	149	200	60	108	129	224	170	55	60	38	46	290	160	65	159	210	M8	M12	Φ8.5
TGM3L-630/800	305	210	280	90	162	146	242	181	62	87	60	22	315	171	72	220	290	M10	M14	Φ11

TGM3L Series Moulded Case Circuit Breaker with Earth Leakage Protection-A/AC Type

10 Ordering Notice

Please specify the following information when ordering:

a) The model, name, and number of poles of the circuit breaker.

b) The rated current of the circuit breaker.

c) Rated residual operating current and breaking time.

d) The accessory name, specification, and combination code of the circuit breaker; When the undervoltage release and shunt release are used, the operating voltage (or control power supply voltage) shall be specified.

e) Purpose: For power distribution (default: power distribution), motor protection (indicated by 2).

f) Quantity.

For example: To order TGM3L-125, three-pole four-wire, circuit breaker with A type, L type breaking capacity for power distribution protection, complex release, rated current 100A, rated residual operating current 100mA/300mA/500mA, non-delay 0.2s, 200 units, please specify TGM3L-125L/3N300A 100A 100mA/300mA/500mA 0.2s 200 units.

For special requirements for circuit breakers, please contact the manufacturer.

11 Quick Selection Example

TGM3L-125L/3N300A 125A 50/200/300mA 0.2s:

To order a TGM3L series 125A frame, 35kA (standard type), rated current 125A three-pole four-wire (that is 3P+N) zero line without protection, circuit breaker for thermal magnetic power distribution protection, residual operating current 50/200/300mA three-gear adjustable, non-delay action type ≤ 0.2s circuit breaker.

TGM3L-125M/33002 125A 300mA Non-adjustable 0.2s:

To order a TGM3L series 125A frame, 50kA (middle breaking type), rated current 125A three-pole, circuit breaker for thermal magnetic motor protection, the residual operating current 300mA non-adjustable, non-delay type operation time ≤ 0.2s circuit breaker.

TGM3L–125L/3N300A 125A 100/200/300mA 0.3/0.7/0.9s:

Order a TGM3L series 125A frame, 35kA (standard type), rated current 125A three-pole four-wire (that is 3P+N), zero line without protection, circuit breaker for thermal magnetic power distribution protection, residual operating current 100/200/300mA three-gear adjustable, delay type maximum operating time 0.3/0.7/0.9s three-gear adjustable circuit breaker.

Note: If special customized products are required, please contact our company.

TGM3L Series Moulded Case Circuit Breaker with Earth Leakage Protection-A/AC Type

12 TGM3L Quick Selection Table

TGM3L	–	A	125	L	Z	/	4	3	10	2	A	F	I	125A	100/300/500mA	0.4s	AC230V	B	W	Plateau	Other
Product model		Residual current operation type	Frame rated current	Breaking capacity	Operation method		Number of poles	Release type	Internal accessory	Purpose	N pole code	Additiona informa-tion	Alarm module	Rated current	Residual operating current	Purpose	N pole code	Additiona informa-tion	Alarm module	Rated current	Residual operating current
TGM3L Moulded Case Circuit Breaker with Earth Leakage Protection		Default: AC type Code A: A type	125 : 125A	L: Standard type	Default: Operation directly		3-Three poles	2: Short circuit protection	00: No accessory 10: Shunt release 20: Aux. conact 30: Undervoltage release 40: Shunt + Aux.	Default: Power distribu-tion protection	A: Three protective poles, the zero line is disconnected not together with other poles	F: Prepaid	I: Leakage alarm and trip	16A 800A	30mA/50mA/75mA/100mA/200mA/300mA/400mA/500mA/600mA/800mA/1000mA	Non-delay: 0.2S 0.1S	AC380/400V AC220/230V DC220V DC110V DC24V	Default: Fixed type front-panel	No code-with flashover distance	Default: Conven-tional application	Handle lock
			250 : 250A	M: Middle type	Z: Operation via rotary handle		3N: 3P+N	3: Overload + Short circuit	50: Shunt + Undervoltage 60: Two sets of aux. contacts 70: Undervoltage + Aux. 08: Alarm contact	Prod2: Motor protec-tionuct	B: Three protective poles, the zero line is disconnected together with other poles		III: Leakage alarm and non-trip		30mA only for 125A and 250A frames; No 30mA product for the delay type switch	Delay type: 0.3/0.4/0.5/0.6/0.7/0.8/0.9/1S	Multiple accessory voltages are described seperately if any (for example: shunt AC230V, undervolt-age AC400V)	B: Fixed type back-panel	W-zero flashover	Plateau Damp and heat Environmen-tal protection Salt spray Low temperature	
			400 : 400A	H: High breaking type	P: Operation via motor		4: 4 poles		18: Shunt + Alarm 28: Aux. + Alarm 38: Undervoltage + Alarm 48: Shunt + Alarm + Aux.		C: Four protective poles, the zero line is disconnected together with other poles		No code: No this accessory		Three gears adjustable can be selected or any fixed gear is selected	Any adjustable three gears are selected or one fixed gear		C: Plug-in type back-panel			
			630 : 630A						68: Two sets of aux. + alarm 78: Undervoltage + Aux. + Alarm		D: Four protective poles, the zero line is disconnected not together with other poles							F: Plug-in type front-panel			
			800 : 800A																		

TGM1EL Series Moulded Case Circuit Breaker with Earth Leakage Protection

1 Overview

TGM1EL Series Moulded Case Circuit Breaker with Earth Leakage Protection is used in the AC 50Hz circuit with the rated voltage 400V and rated current up to 800A for infrequent conversion of the line and infrequent startup of the motor.

The circuit breaker has many protection functions such as long delay, short circuit short delay, short circuit instantaneous, overvoltage, undervoltage, open phase, residual current protection, and thermal simulation. The controller adopts high-precision electronic release to display the voltage, current, residual current, and fault information in real time, and all parameters can be adjustable, viewable, and settable.

The product has one 1-way RS485 standard interface as standard configuration, and complies with the "Low Voltage Moulded Case Circuit Breaker Communication Protocol – with Electric Leakage Protection" (DL/T645).

The product has one 1-way external control opening passive interface as standard configuration, and the circuit breaker will be powered off immediately when this port is short circuited.

Circuit breakers comply with standards:

IEC 60947-1 and IEC60947-2

2 Type Designation

TG M 1 E L – □ □ □ / □ □ □ □ □

- Installation method: Fixed type front-panel by default; C: Plug-in type back-panel; F: Plug-in type front-panel
- Usage: Power distribution protection by default; 2: Motor protection
- Accessory (See Table 1)
- Trip mode (3: Electronic type)
- Number of poles: 3N: three-pole four-wire, N pole has no overcurrent release, and N pole is normally on; 4: 4P
- Operation method code: Direct operation via handle by default; P: For electric operation; Z: For operation via rotary handle;
- Breaking capacity: M:medium breaking; H:high breaking
- Frame rated current (A)
- With residual current protection
- Electronic type
- Design code
- Moulded case circuit breaker
- Enterprise code

Table 1

Accessory type	Code
None	00
Alarm contact	08
Aux. contact	20
Aux. contact + alarm contact set	28
Two sets of aux. contacts	60

Note: The product has the shunt function. If the additional function is required, please refer to Item 5.5.6.

Table 2

Code	Description
A	The N pole is not equipped with an overcurrent release element, and the N pole is always open.
B	The N pole is not equipped with an overcurrent release element, and the N pole is opened and closed together with other three poles (N pole is closed and then open)
C	The N pole is equipped with an overcurrent release element, and the N pole is opened and closed together with other three poles (N pole is closed and then open)
D	The N pole is equipped with an overcurrent release element, and the N pole is always open.

Note: 3-pole product by default: 3N corresponds to A type or D type: 4P corresponds to B type or C type: D type is not available for 250 frame.

TGM1EL Series Moulded Case Circuit Breaker with Earth Leakage Protection

3 Operating Conditions

3.1 The ambient air temperature is ranged -5℃~+40℃.

3.2 The altitude at the installation site does not exceed 2000m.

3.3 The relative humidity of air does not exceed 50% at the temperature +40℃ at the installation site. A higher relative humidity is allowed at low temperatures, such as up to 90% at +20℃. Special measures are taken for condensation occurred occasionally due to temperature changes.

3.4 The pollution degree: 3;

3.5 The installation category of main circuit is Class III, and of the auxiliary circuit or control circuit not connected to the main circuit is Class II;

3.6 The circuit breaker shall be installed in a place where there is no explosive danger or conductive dust sufficient to cause metal corrosion or damage to the insulation;

3.7 The circuit breaker shall be installed in a place where there is no rain and snow immersion;

3.8 The external magnetic field of the installation site does not exceed 5 times the earth's magnetic field in any direction.

4 Technical Parameters

Table 3

Frame current (A)	250		400		630		800	
Rated current Ir (A)	100 ～ 250 adjustable		160 ～ 400 adjustable		250 ～ 630 adjustable		320 ～ 800 adjustable	
	Range 1A							
Rated operating voltage Ue (V)	AC400							
Frequency (Hz)	50							
Rated insulation voltage Ui (V)	1000							
Rated impulse withstand voltage Uimp (kV)	8							
Breaking capacity level	M	H	M	H	M	H	M	H
Icu (kA)	50	85	50	85	50	85	50	85
Ics (kA)	50	50	50	50	50	50	50	65
Number of poles	3P+N、4P							
Isolation function	No							
Usage category	B		B		B		B	
Rated short-time withstand current Icw (kA)/1s	10		5		8		8	
Flashover distance (m)	≤50		≤100		≤100		≤100	
Short circuit short delay protection characteristics (Isd)	Short delay protection set value: 2Ir ~ 12Ir adjustable, with range 1; for characteristics, see Table 7							
Short circuit instantaneous protection characteristics (Ii)	Instantaneous protection set value: 4Ir ~ 14Ir adjustable, with range 1; for characteristics s, see Table 8							
Overvoltage protection characteristics	Voltage operation value: phase voltage 253V~286V (line voltage 437V~494V) adjustable, range 1V, closable Operation delay time: 1s-30s adjustable, range 1s							
Undervoltage protection characteristics	Voltageoperation value: phase voltage is 154V~187V (line voltage 266V~323V) adjustable, range 1V, closable Operation delay time: 1s-30s adjustable, range 1s							
Open phase protection characteristics	When the wire of any phase is disconnected at the inlet terminal of circuit breaker except for N pole, the circuit breaker will trip immediately, and theoperation time is ≤ 0.5s							
Residual current protection characteristics I △ n(mA)	30/50/100/200/300/500/ 800/1000mA Adjustable		50/100/200/300/500/ 800/1000mA Adjustable		50/100/200/300/500/ 800/1000mA Adjustable			
Limit non-drive time △ t(s)	0.06/0.1/0.2/0.3/0.4/0.5s Optional Conventional gear: 0.06/0.1/0.2s adjustable							
Rated residual non-operating current I △ no	50%I △ n							
Rated residual short circuit breaking capacity I △ m	25%Icu							
Communication function (optional)	1-way RS485 interface Communication protocol: "Low Voltage Moulded Case Circuit Breaker Communication Protocol – with Electric Leakage Protection" (DL/T 645). Communication baud rate: 2400, 4800, 9600, 19200, 38400, five gears adjustable							
Remote opening port	Standard remote opening control port (passive port, short circuited to open)							

TGM1EL Series Moulded Case Circuit Breaker with Earth Leakage Protection

5 Protection Characteristics

5.1 Long delay operation characteristics

5.1.1 Power distribution long delay operation characteristics

Table 4

Operation characteristics	Operaiton time								
1.05 Ir	Not operated within 2 hours								
1.3 Ir	Not operated within 1 hour								
2 Ir	Frame size	250				400/630			
	Setting tiem tr (s)	12	60	80	100	12	60	100	150

Note: Ir is the rated current setting value of circuit breaker.

5.1.2 Motor protection type long delay operation characteristics

Table 5

Operation characteristics	Operaiton time								
1.05 Ir	Not operated within 2 hours								
1.2 Ir	Not operated within 1 hour								
1.5 Ir	Frame size	250				400/630			
	Operation time (s)	21.3	107	142	178	21.3	107	178	267
2 Ir	Operation time (s)	12	60	80	100	12	60	100	150
7.2 Ir	Operation time (s)	0.93	4.63	6.17	7.72	0.93	4.63	7.72	11.6
Trip level		/	10A	10	20	/	10	20	30

5.2 Short circuit short delay operation characteristics

Table 6

Current setting value	Operation characteristics	Trip time (tsd)					
Isd:2~12Ir Adjustable (closable)	Isd≤I ＜ Ii	Definite time limit	Time (s)	0.06	0.1	0.2	0.3
			Tolerance (s)	±0.02	±0.03	±0.04	±0.06
			Returnable time	/	/	0.14	0.21
Note: The tolerance of the operating current is ±15%.							

5.3 Short circuit instantaneous operation characteristics

Table 7

Current setting value	Operation characteristics	Trip time (tsd)
Ii:4~14Ir Adjustable (closable)	I≤0.85Ii	Not operated
	I≥1.15Ii	＜ 0.2s

TGM1EL Series Moulded Case Circuit Breaker with Earth Leakage Protection

5.4 Distribution protection type current operation characteristic curve

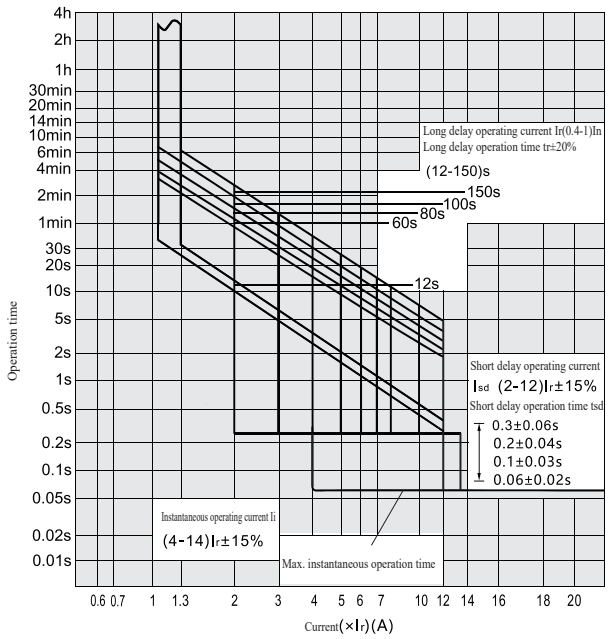

5.5 Residual current protection characteristics

5.5.1 Gear setting range

Table 8

Parameter	Set value	Factory set value
Residual operating current IΔn (mA)	(30), 50, 100, 200, 300, 400, 500, 800, 1000	500

5.5.2 Operation characteristics

Table 9

Parameter	Characteristics			
$I_{\Delta n}$ (mA)	30、50、100、200、300、500、800、1000。			
Rated residual non-operating current	0.5Ia			
Residual operating current	Start value >0.8I, return value <0.75I			
△t (s)	Max. breaking time (s)			
	$I_{\Delta n}$	$2I_{\Delta n}$	$5I_{\Delta n}$	$10I_{\Delta n}$
0	0.3	0.15	0.04	0.04
0.06	0.5	0.2	0.15	0.15
0.1	0.8	0.3	0.3	0.3
0.2	1	0.4	0.4	0.4
0.3	1.2	0.5	0.5	0.5
0.4	1.4	0.8	0.8	0.8
0.5	1.6	1	1	1
0.6	1.7	1.2	1.1	1.1
0.7	1.8	1.4	1.2	1.2
0.8	1.9	1.6	1.3	1.3
0.9	2	1.8	1.4	1.4
1	2	1.8	1.5	1.5

TGM1EL Series Moulded Case Circuit Breaker with Earth Leakage Protection

5.5.3 Overvoltage protection function
When the line phase voltage is higher than the overvoltage protection set value, the circuit breaker protection will trip. When the line voltage recovers to normal voltage, the circuit breaker can be closed and put into operation. The setting value range of overvoltage protection is 253V~286V, and the factory set value is 280V; the protection function can be set or disabled by user.

5.5.4 Undervoltage protection function
When the line phase voltage is below the undervoltage protection set value, the circuit breaker protection will trip. When the line voltage recovers to normal voltage, the circuit breaker can be closed and put into operation. The setting value range of undervoltage protection is 154V~187V, and the factory set value is 160V; the protection function can be set or disabled by user.

5.5.5 Open phase protection function
When there is an open phase at the power end of the line, the circuit breaker protection will trip. When the line voltage recovers to normal voltage, the circuit breaker will be closed and put into operation.

5.5.6 Linkage protection function
The linkage protection with other fire fighting equipment can be realized through the linkage interface as follows:
By remotely opening the control port on the upper cover, the remote control COM will be short connected to the remote control OFF to open (specified after the model: with shunt line).

6 Default Set Value of Factory Parameters of Conventional Product

Table 10

No.	Parameter set value	
1	Overload long delay setting	Current (Ir): 1In; Protection function state: Trip
		Delaty time (tr): 60s
2	Short circuit short delay setting	Current (Isd): 6Ir; Protection function state: Trip
		Delaty time (tsd): 0.3s
3	Short circuit instantaneous setting	Current (Ii): 10 Ir; Protection function state: Trip
4	Overvoltage protection setting	Operation value: 280V
		Protection function state: Trip; delay time: 3s
5	Undervoltage protection setting	Operation value: 160V
		Protection function state: Alarm; delay time: 3s
6	Open phase protection setting	Protection function state: Alarm
7	Residual current setting	IΔn: 500mA Protection function state: Trip
8		Δt: 0.06s
9	Communication baud rate (optional)	9600
10	Communication address (optional)	1

7 Product Technical Data

7.1 Derating Coefficient at Different Temperature

Table 11

Current (A)	Ambient temp.					
	40°C	50°C	55°C	60°C	65°C	70°C
250	1In	0.9 In	0.89 In	0.85 In	0.81 In	0.78 In
400	1In	0.9 In	0.89 In	0.85 In	0.81 In	0.78 In
630	1In	0.9 In	0.89 In	0.85 In	0.81 In	0.78 In
800	1In	0.9 In	0.89 In	0.85 In	0.81 In	0.78 In

7.2 When the altitude of the product exceeds 2000m, the electrical performance shall be corrected according to the table below

Table 12

Altitude (m)	2000	2500	3000	4000	5000
Power frequency withstand voltage (V)	3000	3000	2500	2000	1800
Insulation voltage (V)	1000	800	700	600	500
Operating current correction coefficient	1In	1In	0.94In	0.88In	0.85In

TGM1EL Series Moulded Case Circuit Breaker with Earth Leakage Protection

7.3 Recommended value of wire specification

Table 13

Rated current In (A)	125	160	250	320	400	500	630	800
Sectional area of wire (mm^2)	50	70	120	185	240	2*150	2*185	2*240

7.4 Recommended value of tightening torque of inlet and outlet cable / copper busbar

Table 14

Rated current（A）	Front-panel/back-panel wiring torque (N.m)
250	8.8 ～ 12
400	18 ～ 22
630	28 ～ 32
800	28 ～ 32

8 Introduction on Product Accessory

8.1 Aux. contact (installed on left side)

Table 15

Alarm contact	Resistive current Ith	250：3A		400/630/800: 6A	
	Usage category	AC-15	DC-13	AC-15	DC-13
	Operating voltage	AC380V/415V	DC110V/250V	AC380V/415V	DC110V/250V
	Rated operating current	0.3A	0.15A	1A	0.15A
	Wiring diagram 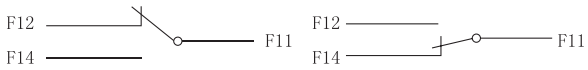 State of circuit breaker in the "OFF" or "Free Trip" position State of circuit breaker in the "ON" position				

8. 2 Alarm Contact

Table 16

Aux. switch	Resistive current Ith	250:3A	400/630/800: 6A
	Rated operating current Ie	Same as aux. contact	Same as aux. contact
	Wiring diagram State of circuit breaker in the Free Trip (Alarm) position State of circuit breaker in the "OFF" or "ON" position		

TGM1EL Series Moulded Case Circuit Breaker with Earth Leakage Protection

8.3 Rotary Manual Operating Mechanism

The outline and installation dimensions of the rotary handle are shown below:

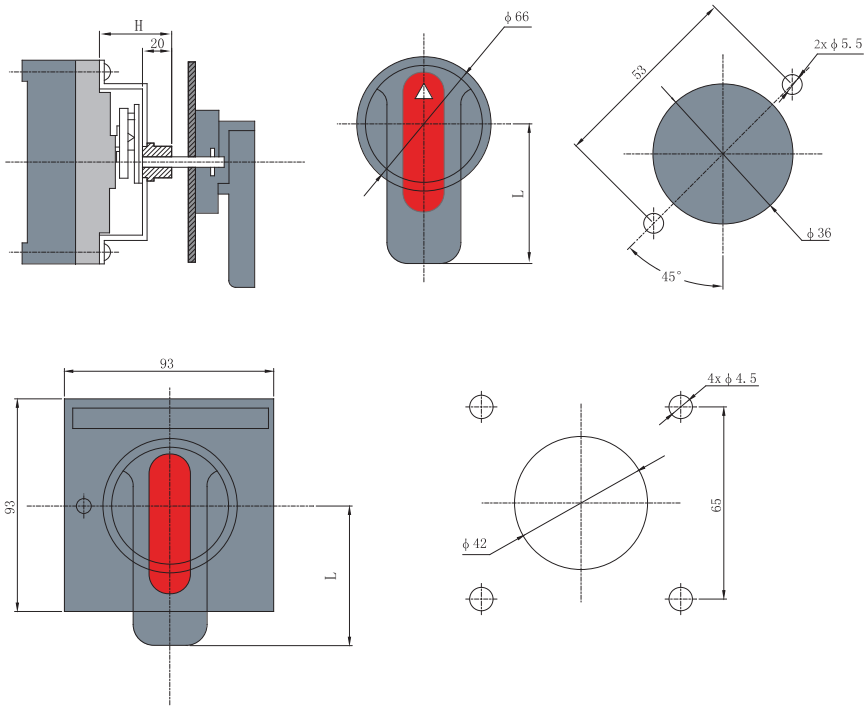

Table 17

Model & Spec.	TGM1EL-250	TGM1EL-400	TGM1EL-630	TGM1EL-800
Installation dimensions (H)	57	87	89	89
Handle length (L)	95	125	125	125

8.4 Motor Mechanism

8.4.1 Motor mechanism wiring diagram

Table 18

Input voltage	AC220V/230V，AC380V/400V
Wiring diagram	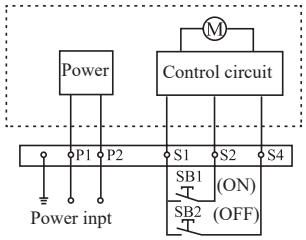 Instruction: P1 and P2 are external power inputs, and SB1 and SB2 are operating buttons (provided by user) Note: Those in the dotted box are the wiring diagram of internal accessories of motor mechanism.

TGM1EL Series Moulded Case Circuit Breaker with Earth Leakage Protection

8.4.2 Outline and installation dimensions of motor mechanism

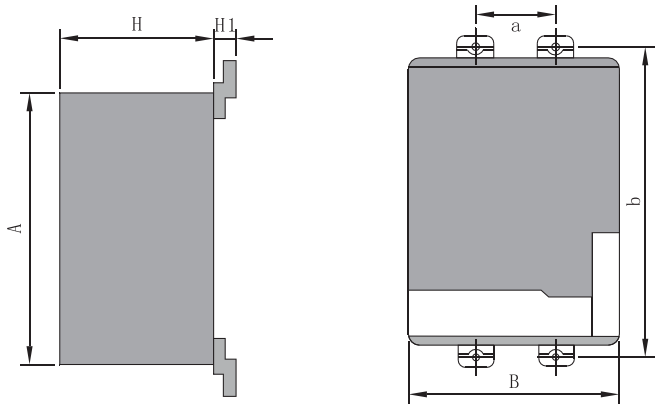

Table 19

Model	A	B	H	H1	a	b
TGM1EL-250	116	90	77	16.5	35	126
TGM1EL-400	174	130	117	35.5	44	193
TGM1EL-630	174	130	115	31.5	114	233
TGM1EL-800	174	130	115	31.5	114	233

9 Outline and Installation Dimensions

9.1 Outline and installation dimensions of circuit breaker

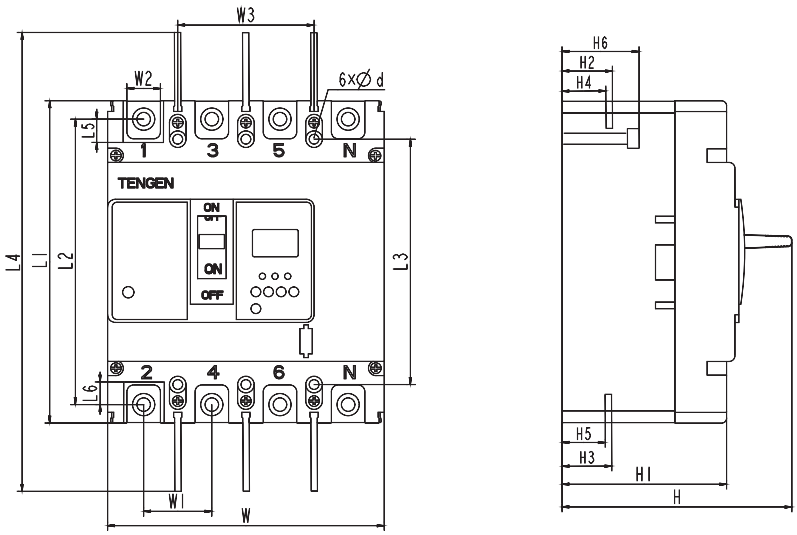

Note: Arc isolating sheet is marked with dot lines.

Table 20

Product model	Outline dimensions												Installation dimensions					
	L1	L4	W	W1	W2	H	H1	H2	H3	H4	H5	L2	L3	L5	L6	W3	H6	Φd
TGM1EL-250	165	300	142	35	26	118	85	21.5	21.5	17.5	17.5	146	126	14	14	70	60	4.5
TGM1EL-400	257	469	198	48	33	153	98	39	38.5	34	35.5	224	194	14.5	14.5	94	67	8
TGM1EL-630	280	484	239	58	44	159	103	38	37	32	32	250	233	16	16	116	72	7
TGM1EL-800	280	484	239	58	44	159	103	38	37	32	32	250	233	16	16	116	72	7

Note 1: H6 is the depth of the hole of mounting screw of product

TGM1EL Series Moulded Case Circuit Breaker with Earth Leakage Protection

9.2 Product Handle Position and Panel Size

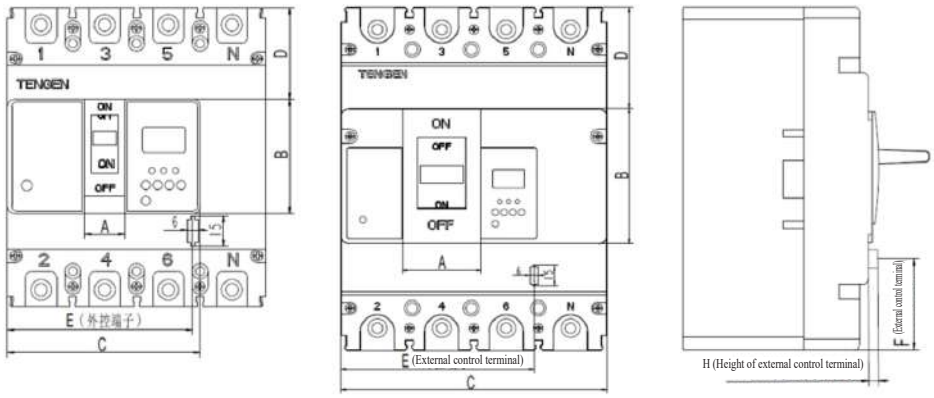

250 400/630/800 250/400/630/800

Table 21

Model	A	B	C	D	E	F	H
TGM1EL-250	22	63	107	50.6	102	42	8
TGM1EL-400	59	101.5	198	76	144	56	8
TGM1EL-630	65	102	239	76.5	162.5	82	8
TGM1EL-800	65	102	239	76.5	162.5	82	8

9.3 Outline and Installation Dimensions of Plug-In Type Back-Panel

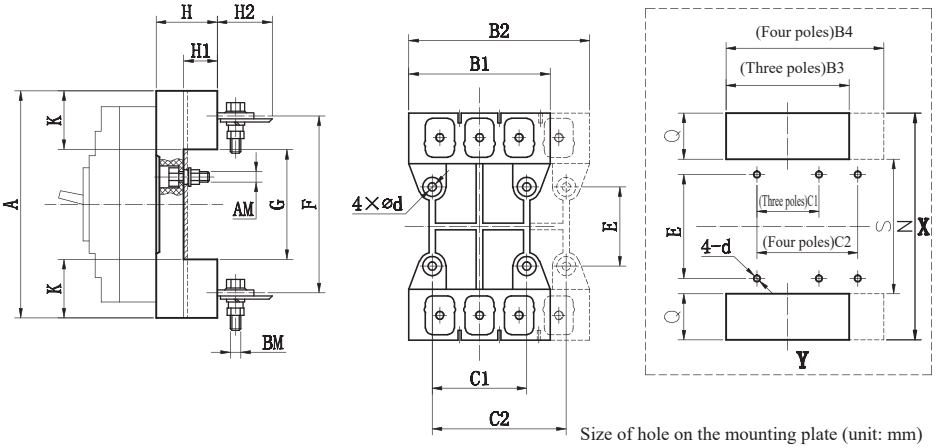

Size of hole on the mounting plate (unit: mm)

Table 22

Model	A	B1	B2	C1	C2	E	F	G	K	H	H1	H2	H3	N	S	Q	B3	B4	AM	BM	Ød
250	186	107	145	70	105	54	145	94	46	50	33	37	20	196	84	56	117	155	M6	M8	6.5
400	280	149	200	60	108	129	224	170	55	60	38	46	24	290	160	65	159	210	M8	M12	8.5

Note: The plug-in type installation method is not available for the 630 and 800 frame

TGM1EL Series Moulded Case Circuit Breaker with Earth Leakage Protection

10 Description of Circuit Breaker Controller Panel and External Control Port

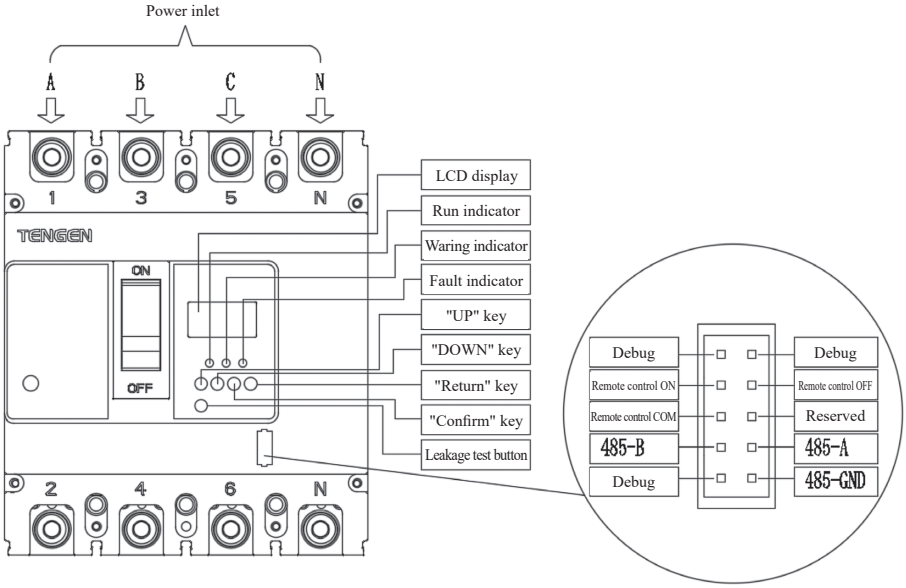

10.1 Description of Indicators on Panel

♦ “RUN” indicator (green): flicker during the normal operation of product;

♦ “Warning” indicator (yellow):

1. When the current is > the overload current setting value Ir * the overload prewarning setting coefficient (with 0.9 fixed), the warning indicator will flicker, and when ≤0.95 * overload current setting value Ir * overload prewarning alarm setting coefficient (with 0.9 fixed), the warning indicator is not on.

2. If the residual current warning is enabled, when the residual current value > the residual current gear value (mA) * residual current warning setting coefficient (default 60%) and the duration time exceeds the residual current warning delay time (default 60s), the warning light will flicker; when the residual current value < [residual current gear value (mA) * residual current warning setting coefficient (default 60%) -5mA], the warning light does not light up.

♦ "Fault" indicator (red): this light will flicker when the alarm function is enabled and there is a voltage or current fault; this light will always on when the product trips due to the voltage or current fault if the trip function is enabled; this light will be off during the normal operation.

Note: The settable residual current warning on the interface is in the "ON" or "OFF" state, and it is in the "OFF" state by default.

10.2 Description of External Control Port

♦ Remote control opening port: It is a passive port. When the "Remote control COM" and "Remote control OFF" are enabled, the circuit breaker will open; when the "Remote control COM" and "Remote control ON" are enabled, the circuit breaker will be closed automatically (the controller and external control lead shall be customized to match with the motor mechanism);

♦ Debugging: This port is used for factory calibration, and cannot be connected to other devices by users.

TGM1EL Series Moulded Case Circuit Breaker with Earth Leakage Protection

11 Ordering Notice

Please specify the following information when ordering:

a) The model, name, and number of poles of the circuit breaker.

b) The rated current of the circuit breaker.

c) The accessory name, specification and combination code of the circuit breaker (the operating voltage value should be specified for shunt release and undervoltage release).

d) Purpose: For power distribution (power distribution application is available by default when delivery) and for motor protection (indicated by 2).

e) Quantity.

For example: TGM1EL-250, 3P+N, 50kA breaking capacity, rated current 250A, with auxiliary contacts, 20 units.

Please specify: TGM1EL-250M/3N320 250A 20 units.

The circuit breaker has three line types: shunt line, communication line, and shunt communication line; the circuit breaker is equipped with a function interface, and the corresponding line indicates the corresponding functional requirement. If there are special requirements for circuit breakers, please contact the manufacturer.

TGM1EL Series Moulded Case Circuit Breaker with Earth Leakage Protection

12 Model Description

TGM2LC Series Moulded Case Circuit Breaker with Earth Leakage Protection

1 Overview

TGM2LC series moulded case circuit breaker is a product developed for meeting the urban and rural power grids and other power grids requiring residual current reclosing functions.

This series of circuit breaker is suitable for three-phase four-wire low-voltage grids with neutral point solid ground, with AC 50Hz, rated voltage of 400V and rated isolation voltage of 800V. The frame grade of the circuit breaker is divided into 125A, 250A, 400A, 630A and 800A. Its setting current is from 65A to 800A; the rated residual action current is from 50mA to 1,000mA. It has the functions of overload protection, short-circuit protection, residual current protection, overvoltage protection, undervoltage protection, open-phase protection, reclosing and other functions. The product is extended to series special for photovoltaic and series special for fee-controlled electric energy meters

By the breaking capacity (Icu), the circuit breaker is divided into L type (standard) and M type (relatively high breaking).

The circuit breaker shall meet the standard: IEC60947-2 and IEC60947-4-1

2 Operating Conditions

(1) Ambient air temperature: -5ºC-+40ºC;
(2) The attitude of the installation site does not exceed 2,000 meters;
(3) The air relative humidity at the installation site shall not exceed 50% at a maximum temperature of +40ºC,and a higher relative humidity is allowed at the lower temperature. For example, the relative humidity can reach 90% at +20ºC. Protection measures should be taken to deal with occasional condensation due to temperature changes;
(4) Pollution degree: 3;
(5) The installation category: III;
(6) The circuit breakers should be installed in a place without explosive hazard, conductive dust and corrosion against metal and damage to insulation;
(7) The circuit breaker shall be installed in the place without invasion of rain and snow;
(8) The external magnetic field of the installation site shall not exceed 5 times of the geomagnetic field in any direction.

3 Type Designation

TG M 2 L C — □ □ /3N/ □

- Y (Liquid crystal type);
- S:(Digital type)
- Number of poles: Three-pole four-wire (3P+N)
- Breaking capacity:
  - L:low breaking(standard)
  - M:medium breaking
  - H:high breaking
- Frame current
- Automatic reclosing function
- Residual current protection function
- Design code
- Moulded case circuit breaker
- Enterprise code

TGM2LC Series Moulded Case Circuit Breaker with Earth Leakage Protection

4 Technical Parameters

Table 1

Frame current Inm(A)	125	250	400	630	630 large volume	800
Setting current Ir1 (A)	65/80/100/125, adjustable	100/125/140/ 160/180/200/ 225/250, adjustable	160/200/225/ 250/315/350/ 400, adjustable	400/440/480/ 500/530/560/ 600/630, adjustable	400/440/480/ 500/530/560/ 600/630, adjustable	400/500/630/ 700/800, adjustable
Number of poles	Three-phase four-wire (3P+N)					
Rated working voltage Ue	AC400V/50Hz					
Rated insulation voltage Ui	1000V					800V
Rated impulse withstand voltage Uimp	8kV					
Rated short-time withstand current Icw	1.5kA/1s	3kA/1s	5kA/1s	8kA/1s	10kA/1s	10kA/1s
Rated remaining action current gear I △ n(mA)	30,50,75,100,150,200,300,400,500,600,700,800,1000+OFF (adjustable,can be turn off), default 500					
Residual current protection type	AC type					
Action threshold of actual residual current	0.8I △ n±5%					
Time-delay limit non-actuating time (s)	0.06/0.1/0.2, one gear or adjustable					
Maximum breaking time at 1I △ n (s)	Non time-delay type: 0.3, time-delay type: 0.5/0.8/1, one gear or adjustable					
Reclosing delay time (s)	20 - 60					
Electric leakage reclosing	Once, on by default (Default OFF for photovoltaic dedicated models)					
Usage category	Category A		Category B			
Rated limit short-circuit breaking capacity Icu(kA)	L type: 35 M type: 50	L type: 50 M type: 65	L type: 65 M type: 85	L type: 65 M type: 85	L type: 65 M type: 85	L type: 65 M type: 85
Breaking capacity of rated operating short circuit Ics(kA)	L type: 25 M type: 35	L type: 35 M type: 50	L type: 50 M type: 65	L type: 50 M type: 65	L type: 50 M type: 65	L type: 50 M type: 65
Rated residual short-circuit connecting and breaking capacity I △ m	I △ m=25%Icu					
Flashover distance (top to bottom, mm)	≤50	≤50	≤100	≤100	≤100	≤100
Overvoltage protection	The function is on by default when delivery , setting value of 250-320V (adjustable), 280V for conventional type (311V by default for the special photovoltaic type); the action time delay of the conventional type is 1-5s (adjustable), 3s by default (the action time delay of the special photovoltaic type is 0-10s (adjustable), 10s by default).					
Undervoltage protection	The function is closed in default when delivery: The setting value is 145-200V (adjustable), 160V by default; the action time delay of the conventional type is 1-5s (adjustable), 3s by default (the action time delay of the special photovoltaic type is 0-10s (adjustable), 10s by default).					
Default phase protection	Off by default when delivery; the setting value is 10-100V (50V by default when delivery); the action time delay is ≤ 0.5s.					
Trip protection of special photovoltaic circuit breaker	On by default; the setting value is 0-50V (adjustable), 46V by default; The action time delay is 0-10s (adjustable), 10s by default.					
Power on closing	Off by default for conventional type (on by default for the special photovoltaic type). The product will be reclosed automatically when the power on testing voltage of the product is higher than the setting value (85% Un by default).					
Voltage reclosing	Off by default for conventional type (on by default for the special photovoltaic type); When the voltage reclosing function is on, the product will be reclosed automatically when the overvoltage fault voltage is restored to below the setting overvoltage value or the undervoltage and default phase fault voltage are restored to above the undervoltage and default phase setting values.					
Electric leakage reclosing	The electric leakage reclosing is on by default for the conventional type (off by default for the special photovoltaic type)					
Communication protocol	RS485 communication interface and infrared communication interface (optional) DL/T-645 communication protocol; Baud rate: 600-19,200 (adjustable) (DL/T 645-1 protocol default 2400, DL/T 645-4 protocol default 2400).					
Externally-mounted lightning protection module	Optional					
Auxiliary contact	Optional					

TGM2LC Series Moulded Case Circuit Breaker with Earth Leakage Protection

5 Features

5.1 Overload long-time delay protection features

Table 2

Serial No.	Test current (I)	Agreed tripping time (T)	Remarks
1	I ≤ 1.05Ir1	Do not trip within 2h	Long-time delay protection function can be turned off; When I=2In, the action time t1=(27,36,54,72,90,108, 144,162s) can be adjusted. Ir2 is the setting value of short delay-time current. The unit of T is s.
2	1.2Ir1≤I ＜ Ir2	$T=(2.0Ir1)^2t1/I2$	
3	I=2Ir1	T=t1	

5.2 Short circuit short-time delay protection features

Table 3

Setting value of the current	Action feature / time	
	V1.x version controller	V2.x, V4.x, Vs.x version controller
Ir2=(2,2.5,3,4, 5,6,7,8,10) Ir1+OFF, adjustable, 6Ir1 by default	1.5Ir2, Operation time t2=(0.1±0.03s, 0.2±0.04s, 0.3±0.06s, 0.4±0.06s), Factory default value is 0.4s; When Ir2≤I<1.5Ir2, the action time T2 complies with $I^2T_2=(1.5Ir_2)^2t2$ inverse time limit; when 1.5Ir2≤I<Ir3, the operation time T2 is t2.	1.5Ir2, Operation time t2=(0.1±0.03s, 0.2±0.04s, 0.3±0.06s, 0.4±0.06s), Factory default value is 0.4s; When Ir2≤I<1.5Ir2 and I < 12 In, the action time T2 complies with $I^2T_2=(1.5Ir_2)^2t2$ inverse time limit; when 1.5Ir2≤I<Ir3 or 12In≤I < Ir3, the operation time T2 is t2.

5.3 Instantaneous short circuit protection features

Table 4

Setting value of the current	Action feature / time
Ir3=(4,5,6,7,8,9,10,12,14)Ir1+OFF, adjustable, precision of ±15%, 10Ir1 by default	＜ 0.2s

5.4 Residual current breaking time characteristic
Non time-delay action characteristic

Table 5

Residual current	I △ n	2I △ n	5I △ n	10I △ n
Maximum break time	0. 3	0. 15	0. 04	0. 04

Time-delay action characteristic

Table 6

Minimum no-drive time (s)	Residual current	I △ n	2I △ n	5I △ n	10I △ n
0.06	Maximum action time (s)	0.5	0.2	0.15	0.15
	Minimum no-drive time (s)	/	0.06	/	/
0.1	Maximum action time (s)	0.8	0.3	0.3	0.3
	Minimum no-drive time (s)	/	0.1	/	/
0.2	Maximum action time (s)	1	0.4	0.4	0.4
	Minimum no-drive time (s)	/	0.2	/	/

TGM2LC Series Moulded Case Circuit Breaker with Earth Leakage Protection

5.5 Time - current characteristic curve

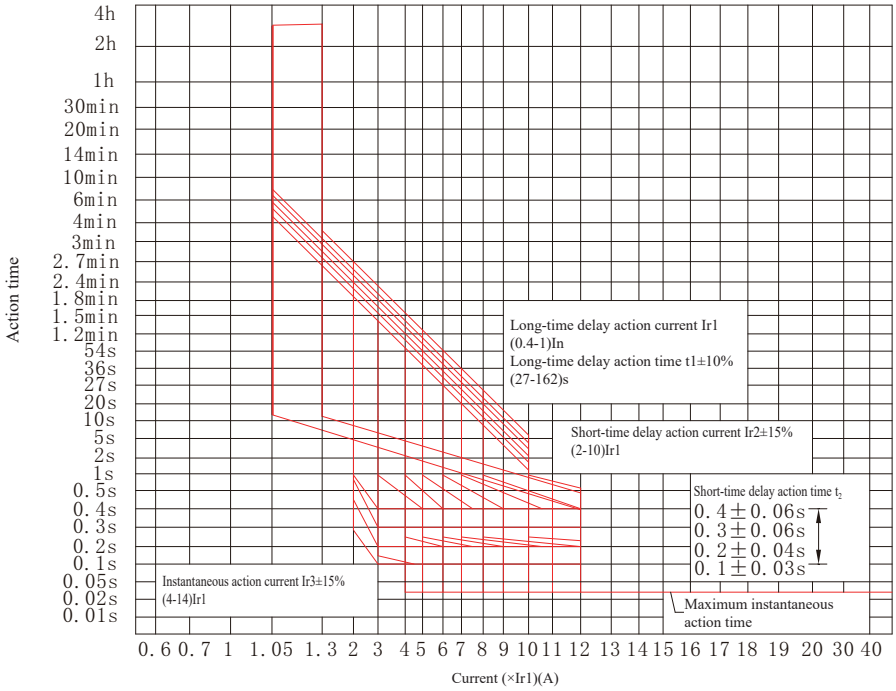

6 Interpretation of Special Functions

6.1 Residual current automatic tracking

(1) Automatic reduction of residual action current setting value

When the residual current automatic tracking function is turned on, if the residual current in the circuit is less than 50% of the setting value of the next gear and lasts for 2 minutes, the circuit breaker will automatically reduce the residual action current setting value by one gear.

(2) Automatic raising of residual action current setting value

When the residual current automatic tracking function is turned on, if the residual current in the circuit is more than 50% and less than 80% of the current of the gear and lasts for 1 minute, the circuit breaker will automatically raise the residual action current setting value by one gear.

6.2 Residual current automatic reclosing function

When the electric leakage reclosing function is turned on, the controller operation interface displays “automatic status”; When the electric leakage reclosing function is turned off, the controller operation interface displays “manual status”. When the product is at the automatic status, the circuit breaker will be reclosed automatically after 20s – 60s if it trips due to residual current. After automatic reclosing, if the circuit breaker re-trips on account of that the residual current fault is not eliminated, the circuit breaker will be closed and will not be reclosed automatically.

6.3 Voltage fault automatic reclosing function

In case of outgoing overvoltage, undervoltage and phase loss and other faults at the incoming end of the product and the corresponding protection function is turned on, the product will trip for protection; When the voltage reclosing function is turned on, the product will be reclosed automatically after the voltage recovers.

Attention: If the circuit breaker has 5 voltage failures consecutively within 5 minutes, the product will enter locking status and will no longer be reclosed automatically.

TGM2LC Series Moulded Case Circuit Breaker with Earth Leakage Protection

7 External Terminals

Figure 1

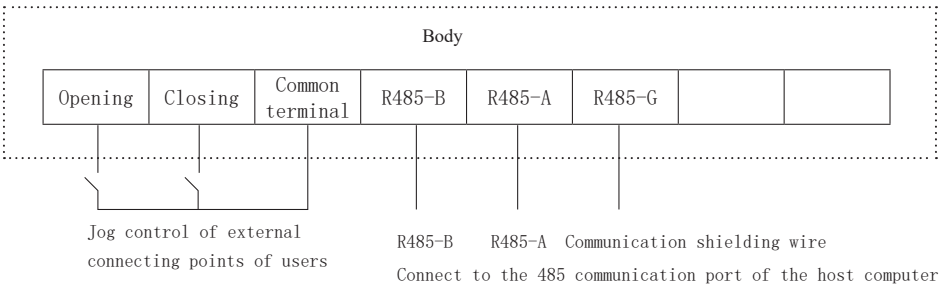

Attention:
1. Closing and opening terminals can only be accessed to passive signal. Access to active signal will damage the controller.
2. Signal output port can be equipped with alarm output or closing and opening status signal output. The contact capacity is 0.25A/AC250V;
3. Shield cables shall be adopted as the connecting line of external terminals to the greatest extent, to enhance the communication effect.

8 Derating Coefficient under Different Temperature

Table 7

Current (a)	Ambient temperature					
	40℃	50℃	55℃	60℃	65℃	70℃
125	1In	0.9In	0.89In	0.85In	0.81In	0.78In
250	1In	0.9In	0.89In	0.85In	0.81In	0.78In
400	1In	0.9In	0.89In	0.85In	0.81In	0.78In
630	1In	0.9In	0.89In	0.85In	0.81In	0.78In
800	1In	0.9In	0.89In	0.85In	0.81In	0.78In

9 Electrical Performance Correction Table When Above 2000 Meters

Table 8

Altitude (m)	2000	2500	3000	4000	5000
Power frequency withstand voltage (V)	3000	3000	2500	2000	1800
Insulation voltage (V)	1000	800	700	600	500
Operating current correction coefficient	1In	1In	0.94In	0.88In	0.85In

TGM2LC Series Moulded Case Circuit Breaker with Earth Leakage Protection

10 Outline and Installation Dimensions

10.1 outline and installation dimension(Figure 2 and Table 9).

Figure 2

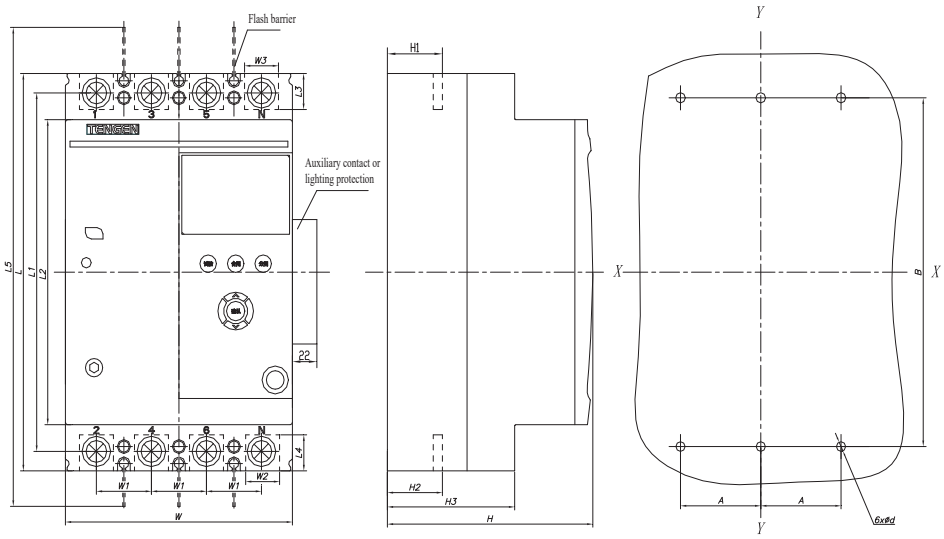

Table 9 Unit: mm

Dimension \ Model		TGM2LC-125	TGM2LC-250	TGM2LC-400	TGM2LC-630	TGM2LC-630 Large volume	TGM2LC-800
Outline dimension	L	220	242	327	327	350	370
	W	122.5	142	198	198	239	280
	H	120	144	180	180	180	182
Remaining dimensions	L1	202	221	295	295	315	332.2
	W1	30	35	48	48	58	70
	W2	18	23	32	32	44	45
	W3	18	23	32	32	44	45
	H1	28	24.5	40	45	45	40.2
	H2	28	24	40	42	35	40.2
	H3	67	89	113	113	104	102.5
	L2	170	193	251	251	258	283
	L3	16.5	20	25	25	27	34
	L4	16.5	20	25	25	27	34
	L5	334	377	555	555	580	598
Installation dimension (mm)	A	30	35	48	48	58	70
	B	198	204	287	287	280	332.2
	Mounting hole φd	6-φ4.5	6-φ4.5	6-φ6	6-φ6	6-φ6	6-φ7
Wiring screw		M8	M8	M10	M10	M12	M12
Mounting screw		M4×45	M4×55	M5×90	M5×90	M5×95	M5×95

TGM2LC Series Moulded Case Circuit Breaker with Earth Leakage Protection

10.2 Auxiliary contact

The auxiliary contacts of the circuit breaker are divided into two groups. The parameters of auxiliary contacts are shown in Figure 3. The schematic diagram of wiring is as follows.

Figure 3

When the circuit breaker is at the position of "opening"	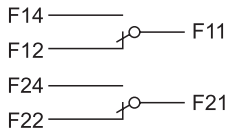

11 Cross-sectional area of external connecting lead

Cross-sectional areas that match with the connecting lead when the rated current doesn't exceed 400A.

Table 10

Rated current (A)	16 20	25	32	40 50	63	80	100	125 140	160	180 200 225	250	315 350	400
Cross-sectional area of copper lead (mm^2)	2.5	4.0	6.0	10	16	25	35	50	70	95	120	185	240

Cross-sectional areas that match with the connecting lead when the rated current exceeds 400A

Table 11

Rated current A	Copper cable		Copper bar	
	Cross-sectional area mm^2	Quantity	Dimension mm×mm	Quantity
500	150	2	30×5	2
630	185	2	40×5	2
800	240	2	50×5	2

12 Ordering Notice

Rated current	125	250	400	630	800
Number of packing case	4 pcs	2 pcs	1 piece	1 piece	1 piece

Please specify when ordering: Name, model, specifications, breaking capacity level, rated current, order quantity and other information of the circuit breaker.

For example: Order 100 sets of TGM2LC circuit-breakers incorporating residual current protection, 400 frame, L type, digital tube controller; Fill in TGM2LC-400L/3N/S1400A 100 sets.

If needing special products for photovoltaic, with lighting protection module, and with infrared communication device, specify when ordering.

TGQ1N Series Automatic Transfer Switch

TGQ1N-63

TGQ1N-160

125-800 frame A type controller

125-800 frame B type controller

125-800 frame C type controller

1 Overview

TGQ1N Series Automatic Transfer Switch is suitable for three-phase four-wire dual power supply network with AC current 50Hz, rated working voltage of AC400V, rated working current up to 800A, to automatically connect one or more load circuits from one power supply to another, ensuring the normal power supply of the load circuit. This product is suitable for industrial places, commercial places, residential buildings and other important places.

2 Type Designation

TG Q 1N - 63 □/□ □ □ □ □ □ □ □

- Rated current (10, 16, 20, 25, 32, 40, 50, 63) A
- Instantaneous tripping types: C- Power distribution protection type; D- Motor protection type
- Optional functions: W- Fire control linkage function; Z-Transfer rejecting movement alarm function; C- False wiring alarm; G-Fault alarm output (no optional function for standard type)
- Controller action mode: No code - automatic transfer and restoration; S- automatic transfer without restoration (only for intelligent type)
- Controller operating modes: No code - power grid - power grid; F- power grid - generator (only for intelligent type)
- Communication (Optional): No code - without communication device; T- with communication device (the communication device is only optional to the intelligent type)
- Controller model: A - standard type; B - intelligent type
- Number of poles: 3- 3 poles; 4 - 4 poles
- Breaking capacity: L:low breaking(standard); M:medium breaking; H:high breaking
- Frame current: 63
- Design code
- Automatic transfer switch
- Enterprise code

TG Q 1N - □ □/□ □ □ □ □ □ □ □

- Rated current (16-800) A
- Optional functions: W- Fire control linkage function; Z- Transfer rejecting movement alarm function; C- False wiring alarm; G -Fault alarm output (No optional function for economic type)
- Controller action mode: No code - automatic transfer and restoration; S- automatic transfer without restoration (not available for economic type)
- Controller operating modes: No code - power grid - power grid; F- power grid – generator (not available for economic type)
- Communication (Optional): No code - without communication device; T- with communication device (the communication device is only optional to the intelligent type)
- Controller model: A - economic type; B - standard type; C- intelligent type
- Structural form: Y- integrated; No code - split type (only for intelligent type)
- Number of poles: 3- 3 poles; 4 - 4 poles
- Breaking capacity: L:low breaking(standard); M:medium breaking; H:high breaking
- Frame current: 125, 160, 250, 320, 400, 630, 800
- Design code
- Automatic transfer switch
- Enterprise code

TGQ1N Series Automatic Transfer Switch

3 Technical Parameters

Model	TGQ1N-63		TGQ1N-125		TGQ1N-160		TGQ1N-250、320		TGQ1N-400、630		TGQ1N-800	
Standard	IEC60947-6-1											
Executive circuit breaker	TGB1N-63	TGB3H-63	TGM1N-125		TGM1N-160		TGM1N-250、320		TGM1N-400、630		TGM1N-800	
Current specifications (A)	10、16、20、25、32、40、50、63		16、20、25、32、40、50、63、80、100、125		100、125、140、160		160、180、200、225、250、280、300、315、350		250、315、350、400、500、630		630、700、800	
Rated working voltage (Ue)	AC400V 50Hz											
Rated insulation voltage (Ui)	AC 500V		AC 800V									
Rated impulse withstand voltage (Uimp)	4kV		8kV									
Number of poles	3P/4P											
Tripping type	Grades C and D tripper		/									
Code of short-circuit breaking capacity	M	H	L	M	L	M	L	M	L	M	L	M
Rated short-circuit making capacity Icm(kA)	9.2	17	52.5	73.5	73.5	105	73.5	105	105	154	105	154
Rated short-circuit breaking capacity Icn(kA)	6	10	25	35	35	50	35	50	50	70	50	70
Mechanical life(times)	10,000(*)						6,000 (*)				4,000 (*)	
Electrical life (times)	3,000(*)								2,000 (*)			
Usage category	AC-33iB		AC-33B									
Electrical level	CB class											
Protection features	Overload protection / short circuit protection											
Installation mode	Fixed vertical installation											
Wiring mode	Screw wiring											
Operation mode	Manual/automatic/remote operation (with communication device)											
Electromagnetic compatibility	Environment B											
Length of insulation to be removed before insertion of the conductor into the terminal (mm)	11		/									
The maximum number of conductor allowed to be clamped	1								2			
Switch position	Normal (I), power off (O), standby (II)											
Pollution degree	2		3									
Screw tightening torque (N·m)	2.5		8		10		12		22		28	
Screw failure moment (N·m)	3		12		15		18		26		33	
Protection grade	IP20		IP00									
Contact transfer time(s)±10%	0.45		1.2		0.9		1		2.8		2.8	
Off time±10%	0.45		1.2		0.9		1		2.8		2.8	
Delay time range (s)	Fixed (standard type), 0 - 30s adjustable (intelligent type)		Fixed (economic type), 0 - 30s adjustable (standard type), 0 - 90s continuously adjustable (intelligent type)									
Supply voltage deviation range (V)	160±10%		160±10% (economic type, standard type), 160 - 200 adjustable ±10% (intelligent type)									
Control features	Undervoltage, voltage loss, overvoltage, phase loss transformation											
Controller power consumption (W)	≤5		≤10									
Normal operation scope	85%Ue ～ 110%Ue											
Special requirements	Normal installation conditions											
Isolation function	Yes											

Note: (*) maintainable

TGQ1N Series Automatic Transfer Switch

4 Functions of controller

Applicable frame		63		125-800		
Type of controller		A (standard type)	B (intelligent type)	A (Economic type)	B (standard type)	C (intelligent type)
Installation form		Integrated		Integrated	Integrated	Integrated, split type
Rated working voltage		230V/50Hz				
Work location	Closing of normal power supply	■	■	■	■	■
	Closing of standby power supply	■	■	■	■	■
	Opening of dual-way power supply	■	■	■	■	■
Operation mode	Automatic operation	■	■	■	■	■
	Handle operation	■	■	■	■	■
	Controller button operation	—	■	—	■	■
	Remote communication control	—	□	—	—	□
Key operation	Switch to normal	—	—	—	■	■
	Switch to standby	—	—	—	■	■
	Switch double split	—	—	—	■	■
	Test button	—	■	—	■	■
Monitor	Monitoring phase	3-phase for common use, single phase for standby	3-phase	3-phase for common use, single phase for standby	3-phase	3-phase
	Normal undervoltage monitoring	■	■	■	■	■
	Normal overvoltage monitoring	—	■	—	■	■
	Normal voltage loss monitoring	■	■	■	■	■
	Normal loose of phase monitoring	■	■	■	■	■
	Standby undervoltage monitoring	Phase A	■	Phase A	■	■
	Standby overvoltage monitoring	—	■	—	■	■
	Standby voltage loss monitoring	■	■	■	■	■
	Standby loose of phase monitoring	Phase A	■	Phase A	■	■
	Fire-fighting signal power off	—	■	—	■	■
Conversion mode	Automatic change and automatic recovery	■	■	■	■	■
	Mutual backup	—	■	—	■	■
	Automatic change without automatic recovery	—	■	—	■	■
Grid connection	Power grid - power grid	■	■	■	■	■
	Power grid - generator	—	□	—	□	□
Display	Screen	Indicator light	Indicator light	Indicator light	Indicator light	Liquid crystal
	Indication of normal power supply	■	■	■	■	■
	Indication of standby power supply	■	■	■	■	■
	Connection and disconnection of the common power supply	■	■	■	■	■
	Connection and disconnection of the standby power supply	■	■	■	■	■
	Voltage values of the common power supply	-	-	-	-	■
	Voltage values of the standby power supply	-	-	-	-	■
	Manual / automatic	■	■	■	■	■
	Display of time delay	-	■(Dial-up indicator)	-	■(Dial-up indicator)	■
	Display of fault alarm	-	■	-	■	■
	Fire control linkage status	-	-	-	-	■
	Generator starting state	-	-	-	-	■
Parameter setting	Adjustable transfer time delay (s)	-	■	-	■	■
	Adjustable return time delay (s)	-	■	-	■	■
	Operating mode switch settings	■	■	■	■	■
	Generator startup time delay	-	-	-	-	□
	Generator shutdown time delay	-	-	-	-	■
	Adjustable undervoltage	-	-	-	-	■
	Adjustable overvoltage	-	-	-	-	■
Other functions	Fire control feedback	-	□(one from four, default)	-	□(one from four, default)	□(one from four, default)
	Fault alarm output	-	□ (one from four)	-	□ (one from four)	□ (one from four)
	Position feedback output	■	■	■	■	■
	Communications function	-	□	-	-	□
	Transfer failure alarm	-	□ (one from four)	-	□ (one from four)	□ (one from four)
	Wrong wiring alarm	-	□ (one from four)	-	□ (one from four)	□ (one from four)

Note:

1. "-" this function is not available; "□" this function is optional; "■" standard function;
2. The one from four function of C type is adjustable. The one from four function of B type can only set when delivery.

TGQ1N Series Automatic Transfer Switch

5 Normal working conditions and installation conditions

5.1 Ambient air temperature: the ambient air temperature shall be not higher than +40ºC but shall not lower than -5ºC, with the average temperature within 24h not exceeding +35ºC;

5.2 Altitude: The altitude of the installation site should be not more than 2,000 meters;

5.3 Atmospheric conditions: the relative humidity of atmosphere shall not exceed 50% at the maximum ambient temperature of +40ºC, and a higher relative humidity is allowed at the lower temperature. For example, the relative humidity can reach 90% at +20ºC. Special measures shall be taken for occasional condensation due to temperature changes.

5.4 Pollution degree: The pollution degree of 63 frame is Level 2; the pollution degree of 125 and above frames is Level 3.

5.5 Installation category: IV.

5.6 Inclination of installation: The product is fixed and installed in the cabinet, with the maximum inclination of ±22.5°.

6 Features and functions

TGQ1N Series Automatic Transfer Switch (hereinafter referred to as automatic transfer switch) is a new generation of Grade CB products combining advanced digital electronic control technology. It has the characteristics of Small volume, good-looking appearance, energy-saving, convenient installation and reliable double interlocking protection and advanced and complete functions.

6.1 Small volume,

It adopts single motor driving structure, which achieves transfer through the positive rotation and reverse rotation of the motor, and reduces the product height and installation space.

6.2 Energy-saving

It is driven by motor, with small power consumption and small noise.

6.3 Double interlocking protection

It adopts mechanical interlock and electronic interlock to prevent the synchronous power on of two power supplies.

7 Controller display and operating instructions

7.1 Description of the display interface of 63 frame type A controller

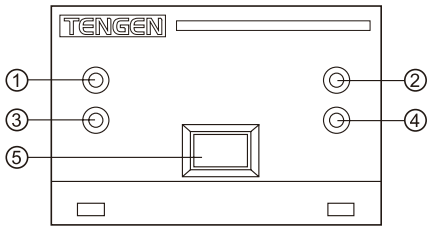

63 frame type A controller

① Normal power supply indicator light;
② Standby power supply indicator light;
③ Normal closing indicator light;
④ Standby closing indicator light;
⑤ Switchover button between Automatic Mode and Manual Mode.

TGQ1N Series Automatic Transfer Switch

7.2 Description of the display interface of 63 frame type B controller

7.2.1 Controller operation introduction

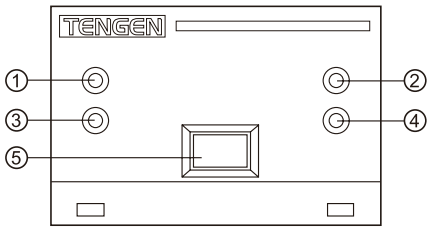

63 frame type B controller

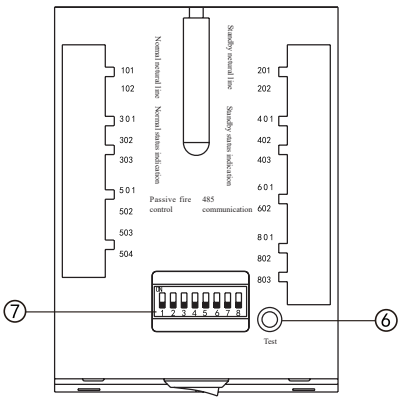

Top dial-up and test keys of products

① Normal power supply indicator light (flicker and alarm in case of fault);
② Standby power supply indicator light (flicker and alarm in case of fault);
③ Normal closing indicator light;
④ Standby closing indicator light;
⑤ Switchover button between Automatic Mode and Manual Mode (for products with fire control linkage function, press the automatic/manual key to relieve after implementing the fire control linkage function);
⑥ Test key: Press the test key, and two power supplies perform a transfer to meet the requirements of field debugging and testing.
⑦ Dial-up setting switch.

7.2.2 Dial-up setting description

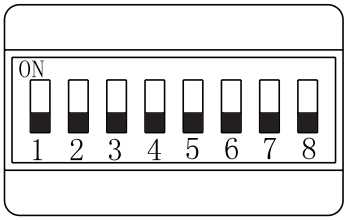

8-digit dial-up switch

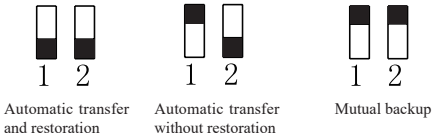

Operating mode setting

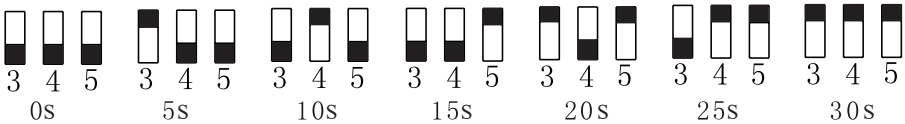

Return time delay setting

TGQ1N Series Automatic Transfer Switch

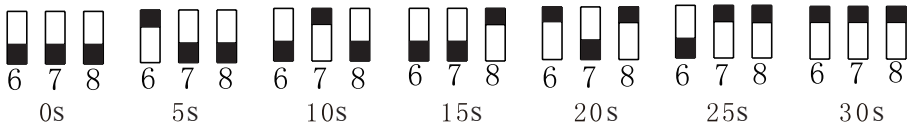

Return time delay setting

Note: Switch the dial-up down; Switch the dial-up up

Table of setting values

Setting item	Dial-up switch								Remarks
	1	2	3	4	5	6	7	8	
Transfer mode setting	0	0	-	-	-	-	-	-	Automatic transfer and restoration
	1	0	-	-	-	-	-	-	Automatic transfer without restoration
	1	1	-	-	-	-	-	-	Mutual backup
Transfer time delay setting	-	-	0	0	0	-	-	-	0s
	-	-	1	0	0	-	-	-	5s
	-	-	0	1	0	-	-	-	10s
	-	-	0	0	1	-	-	-	15s
	-	-	1	0	1	-	-	-	20s
	-	-	0	1	1	-	-	-	25s
	-	-	1	1	1	-	-	-	30s
Return time delay setting	-	-	-	-	-	0	0	0	0s
	-	-	-	-	-	1	0	0	5s
	-	-	-	-	-	0	1	0	10s
	-	-	-	-	-	0	0	1	15s
	-	-	-	-	-	1	0	1	20s
	-	-	-	-	-	0	1	1	25s
	-	-	-	-	-	1	1	1	30s
Note: The sequence of the dial-up switch increases from left to right, with 8 digits in total, pushing to the direction of the dialing code to meet the ON is 1, otherwise it is 0, and the dialing should be completed firmly.									

7.3 Description of the display interface of 125-800 frame type, A controller

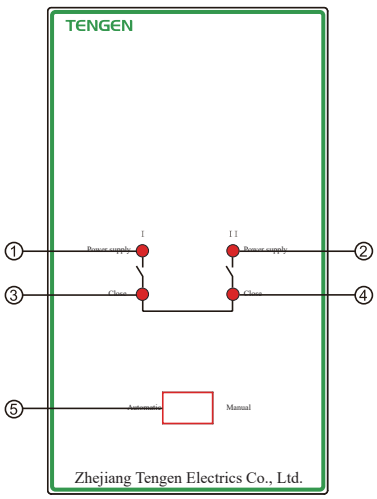

125-800 frame A type controller

① Normal power supply indicator light;
② Standby power supply indicator light;
③ Normal closing indicator light;
④ Standby closing indicator light;
⑤ Switchover Button between Automatic Mode and Manual Mode.

TGQ1N Series Automatic Transfer Switch

7.4 Description of the display interface of 125-800 frame type,B controller

7.4.1 Controller operation introduction

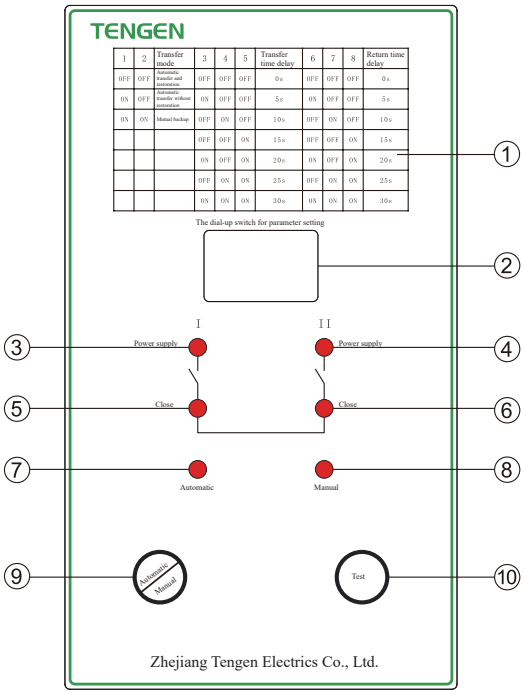

1	2	Transfer mode	3	4	5	Transfer time delay	6	7	8	Return time delay
OFF	OFF	Automatic transfer and restoration	OFF	OFF	OFF	0s	OFF	OFF	OFF	0s
ON	OFF	Automatic transfer without restoration	ON	OFF	OFF	5s	ON	OFF	OFF	5s
ON	ON	Manual backup	OFF	ON	OFF	10s	OFF	ON	OFF	10s
			OFF	OFF	ON	15s	OFF	OFF	ON	15s
			ON	OFF	ON	20s	ON	OFF	ON	20s
			OFF	ON	ON	25s	OFF	ON	ON	25s
			ON	ON	ON	30s	ON	ON	ON	30s

① Comparison table of dial-up switch settings;
② The dial-up switch for parameter determination;
③ Normal power supply indicator light (flicker and alarm in case of fault);
④ Standby power supply indicator light (flicker and alarm in case of fault);
⑤ Normal closing indicator light;
⑥ Standby closing indicator light;
⑦ Automatic status indicator light;
⑧ Manual status indicator light;
⑨ Switchover Button between Automatic Mode and Manual Mode;
⑩ Test key.

7.4.2 Dial-up setting description

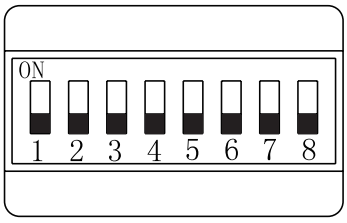

8-digit dial-up switch

The setting way of the dial-up switch is same as 7.2.2

TGQ1N Series Automatic Transfer Switch

7.5 Description of the display interface of type C controller

7.5.1 Operating instructions of type C controller

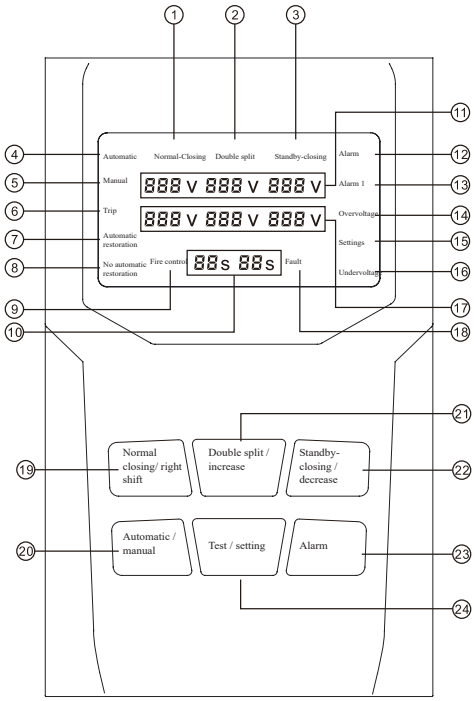

① Represent the status of closing for normal power supply;

② Represent the status of double split;

③ Represent the status of closing for standby power supply;

④ Represent that it is in automatic mode;

⑤ Represent that it is in manual mode (It can be forcedly transferred with the operating handle or electrically transferred with the key. It needs to be noted that the power supply for the pre-switching power supply side must be normal voltage, otherwise it will not be transferred);

⑥ Represent that the product is under overcurrent tripping status;

⑦ The transfer mode is automatic transfer and restoration;

⑧ The transfer mode is automatic transfer without restoration;

⑨ Status after implementing the fire control linkage function;

⑩ Display of time delay;

⑪ Displaying area of real-time voltage monitoring values A, B and C of the normal power supply;

⑫ Alarm indication (when the word “alarm” is displayed (the alarm key can be used to turn on or turn off the “alarm” display status), the phase-to-ground voltage exceeds 300V or null line is connected wrong, or the buzzer alarms in case of switch overcurrent trip fault);

⑬ Alarm 1 (a reserved function, which can be used for customization);

⑭ Displaying overvoltage status (When it is detected that the power supply terminal voltage exceeds the set threshold value, it displays the word “overvoltage”);

⑮ Displaying mode setting;

⑯ Displaying undervoltage status (When it is detected that the power supply terminal voltage is lower than the set threshold value, it displays “undervoltage”);

⑰ Displaying area of real-time voltage monitoring values A, B and C of the standby power supply;

⑱ Fault display (fault display when the phase-to-ground voltage exceeds 300V or null line is connected wrong);

⑲ Normal-closing/shift composite key (when the normal power supply is normal, press this key to forcibly switch it to the normal power supply; During the mode setting, the key is of parameter right shift function);

⑳ Automatic/manual switch composite key;

㉑ Double split/ increase composite key (in the manual or automatic mode, press the key to transfer the switch to the power off position; During the mode setting, the parameter is modified to be increasing);

㉒ Standby-closing /decrease composite key (when the standby power supply is normal, press this key to forcibly switch it to the standby power supply; During the mode setting, the parameter is modified to be decreasing);

㉓ Alarm switch key (press the key to turn on or turn off the alarm function);

㉔ Test/set composite key (for test function: When the standby power supply is normal, short press this key to make ATSE transfer from the common power supply to the standby power supply side, vice versa; When setting the functions: Long press this key for 5s, to enter the setup).

7.5.2 Description of setting of C type controller

In the standby mode, press “test/set” for over 5s (short press the key to enter the test function) to enter the setting mode.

Press “Double split/ increase” key to increase and press “Standby-closing / decrease” key to decrease.
Press “Normal-closing/ right shift” key to set next parameter.

The default setting value of overvoltage is 270V. The setting range for users is 240-290V.

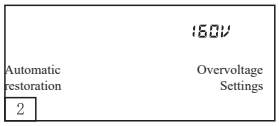

Press “Double split/ increase” key to increase and press “Standby-closing / decrease” key to decrease.
Press “Normal-closing/ right shift” key to set next parameter.

The default setting value of undervoltage is 160V. The setting range for users is 160-200V.

Press “Double split/ increase” key to increase and press “Standby-closing / decrease” key to decrease.
Press “Normal-closing/ right shift” key to set next parameter.

The default setting value of transfer time delay is 0s. The setting range for users is 0-99s

Press “Double split/ increase” key to increase and press “Standby-closing / decrease” key to decrease.
Press “Normal-closing/ right shift” key to set next parameter.

The default setting value of return time delay is 0s. The setting range for users is 0-99s

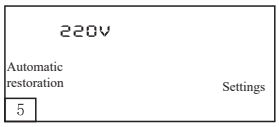

Press “Double split/ increase” key to increase and press “Standby-closing / decrease” key to decrease.
Press “Normal-closing/ right shift” key to set next parameter.

Calibration of common Phase A voltage

TGQ1N Series Automatic Transfer Switch

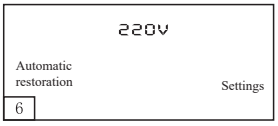

Press “Double split/ increase” key to increase and press “Standby-closing / decrease” key to decrease.
Press “Normal-closing/ right shift” key to set next parameter.

Calibration of normal Phase B voltage

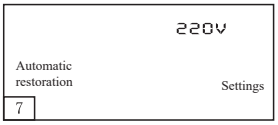

Press “Double split/ increase” key to increase and press “Standby-closing / decrease” key to decrease.
Press “Normal-closing/ right shift” key to set next parameter.

Calibration of normal Phase C voltage

Press “Double split/ increase” key to increase and press “Standby-closing / decrease” key to decrease.
Press “Normal-closing/ right shift” key to set next parameter.

Calibration of standby Phase A voltage

Press “Double split/ increase” key to increase and press “Standby-closing / decrease” key to decrease.
Press “Normal-closing/ right shift” key to set next parameter.

Calibration of standby Phase B voltage

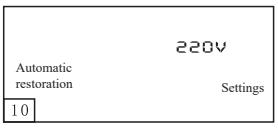

Press “Double split/ increase” key to increase and press “Standby-closing / decrease” key to decrease.
Press “Normal-closing/ right shift” key to set next parameter.

Calibration of standby Phase C voltage

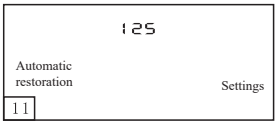

Press “Double split/ increase” key to increase and press “Standby-closing / decrease” key to decrease.
Press “Normal-closing/ right shift” key to set next parameter.

Frame setting (settable parameters include: 125, 250, 400, 630, 800; no adjustment of this item is required by the user).

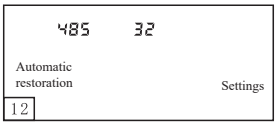

Press “Double split/ increase” key to increase and press “Standby-closing / decrease” key to decrease.
Press “Normal-closing/ right shift” key to set next parameter.

485 communication address setting

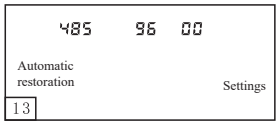

Press “Double split/ increase” key to increase and press “Standby-closing / decrease” key to decrease.
Press “Normal-closing/ right shift” key to set next parameter.

485 communication baud rate setting

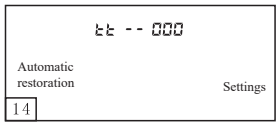

Press “Double split/ increase” key to increase and press “Standby-closing / decrease” key to decrease.
Press “Normal-closing/ right shift” key to set next parameter.

Signal output function setting: “tt--000” fire control feedback output; “tt--001” transfer failure output; “tt--002” wrong wiring output; “tt--003” failure output.

Press “double split/increase” key for increase when “no automatic recovery” is displayed on the screen.
Press “normal-closing/right shift” key step by step, save and exit parameters until all parameters are pressed.

Automatic restoration/without automatic restoration setting

Remarks:

1. If factory default settings need to be recovered, press automatic/manual key for 5s to recover factory default settings (after recovering factory default settings, please recalibrate the normal and standby voltages and reset the frame parameters).
2. When setting the automatic recovery/no automatic recovery: It can set any item of parameters 1-14. The overvoltage setting parameter is taken as an example here. (When automatic restoration or without automatic restoration is displayed, press “right shift/normal-closing” key for confirmation. If no “automatic restoration/without automatic restoration” is displayed, the system is of without automatic restoration function by default).

8 Installation and use

8.1 Wiring diagram of the main circuit of the 3P products (power phase sequence must be consistent)

8.1.1 63 frame, 3P

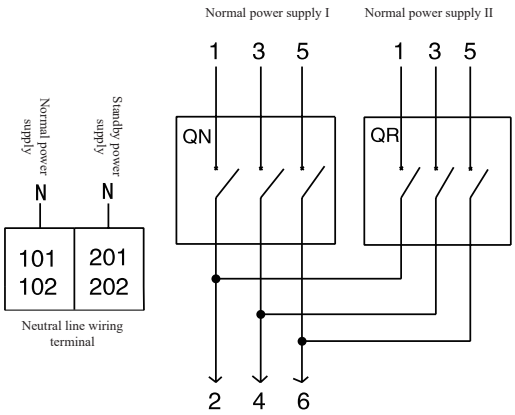

TGQ1N Series Automatic Transfer Switch

8.1.2 125-800 frame, 3P

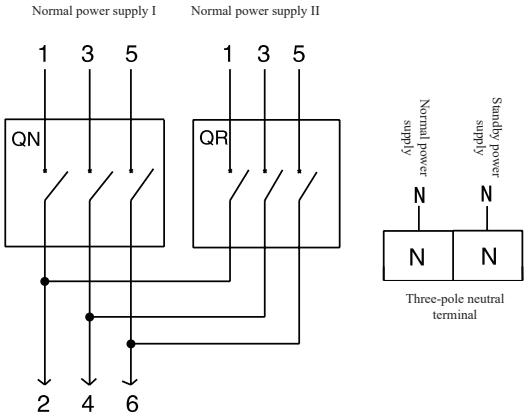

8.2 Wiring diagram of the main circuit of the 4P product (power phase sequence must be consistent)

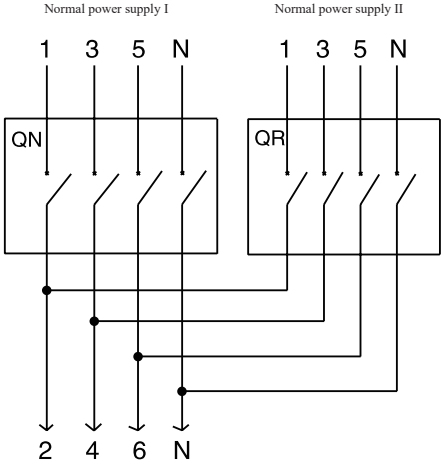

Note: QN is the executive circuit breaker at the normal power supply; QR the executive circuit breaker at the standby power supply.

8.3 Secondary wiring diagram of the controller

8.3.1 Secondary wiring diagram of 63 frame controller

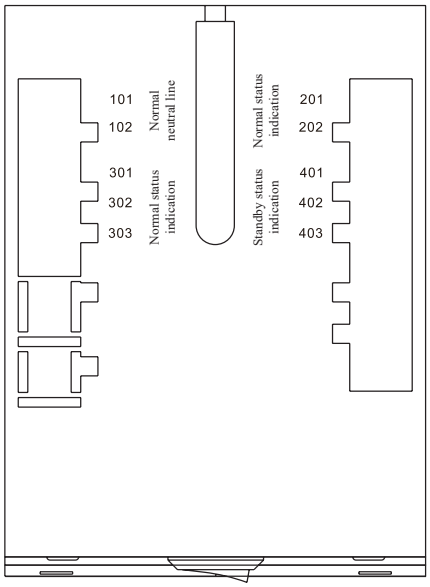

Standard controller

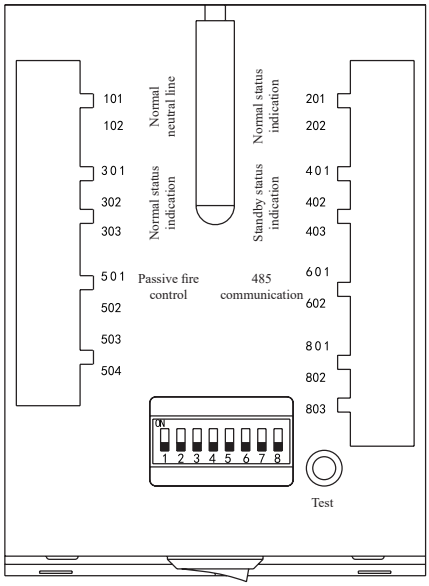

Intelligent controller

TGQ1N Series Automatic Transfer Switch

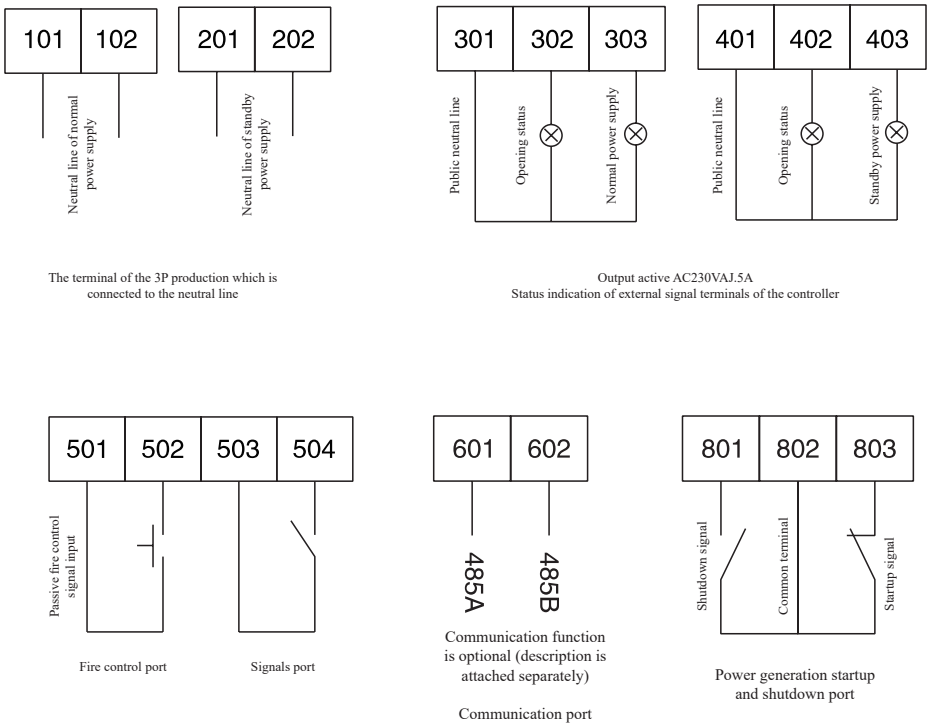

Port wiring instructions:

1. 101, 102, 201 and 202 only need to be connected for 3P products. Please connect the neutral line of the normal power supply to 101 or 102 (or both); Please connect the neutral line of the standby power supply to 201 or 202 (or both). The product will not operate if a three-pole product is not connected to the operating neutral line (not required for 4-pole products).

2. 501, 502 passive fire control signal input (note: After the fire control linkage is started, the control mode will be locked. It can be unlocked by pressing automatic/manual button).

3. 503 and 504 are optional, one from four (see the function table of the controller for details, a set of dry contact signal output. For products with a communication device, the output options shall be set according to the host computer. For products without a communication device, one function shall be fixed in the procedure according to the requirements of customers).

4. 601 and 602 are communication port input. 601 is 485+ (485A); 602 is 485- (485B). Make sure that all polarities are connected correctly; otherwise, the communication will fail.

5. 801, 802 and 803 are power generation startup and shutdown signal output. 802 is COM end; 803 is generator startup signal; 801 is generator shutdown signal.

Remarks: 501, 502, 503, 504; 601, 602, 801, 802 and 803 are available only when “intelligent type” products are selected by you.

8.3.2 Secondary wiring diagram of 125-800 frame controller

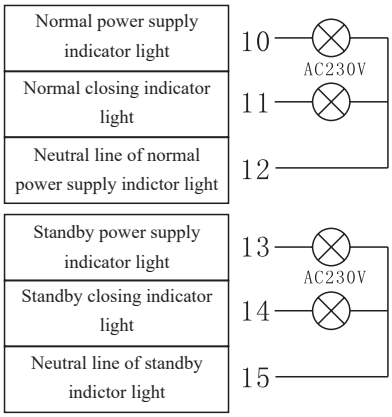

Secondary wiring diagram of the economic controller

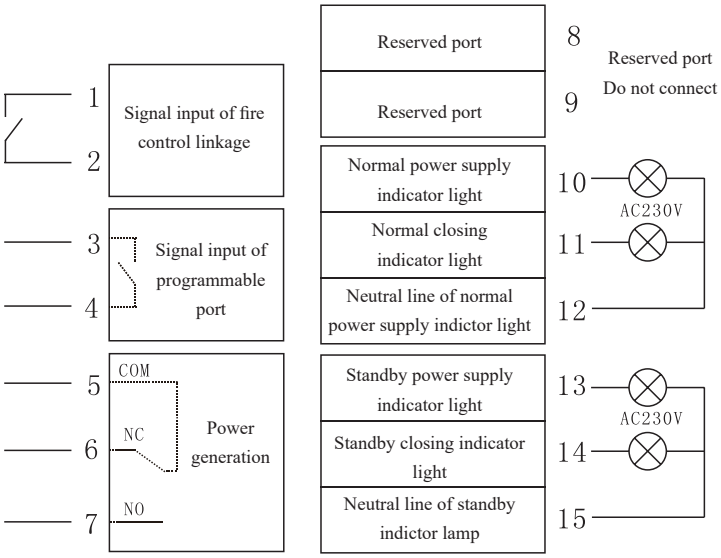

Secondary wiring diagram of the standard controller

TGQ1N Series Automatic Transfer Switch

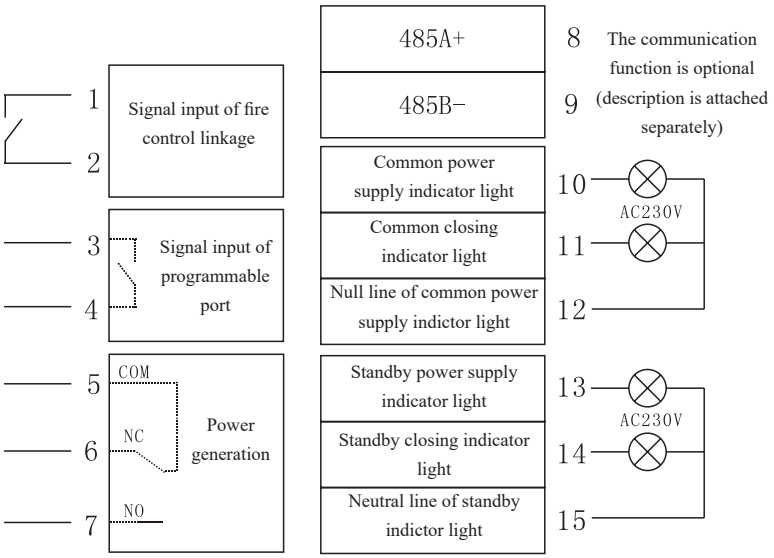

Secondary wiring diagram of the intelligent controller

Remarks:

1. Fire control linkage signal outputs (1, 2) are “passive pulse, short-circuit signal” by default (it only needs to be triggered, and can be short-circuit for a long time). Do not connect them with active power supply during operation; otherwise, the fire control linkage function may be lost. When active DC24V signal needs to be connected to, please consult with the manufacturer for customizing.
2. The generator startup signals (5, 6, 7) can only be used in the power grid – power generation mode. The generator can be connected as needed. In case of fault of the normal power supply, 5 (COM) and 6 (NC) are connected. When the normal power supply is normal, 5 (COM) and 7 (NO) are connected.
3. For programmable signal outputs (3, 4), the output of a function signal shall be determined according to the one from four function (see the function table of the controller for details).
4. 485 communication ports (8, 9) are optional. Please note that, make sure that all polarities are connected correctly during wiring.
5. The output of normal status signals (10, 11, 12) and standby status signals (13, 14, 15) is active AC-230V. Do not connect it with voltage signal; otherwise, it will be short-circuiting with the internal power supply.

9 Description of split assembly of 125-800 frame intelligent controller

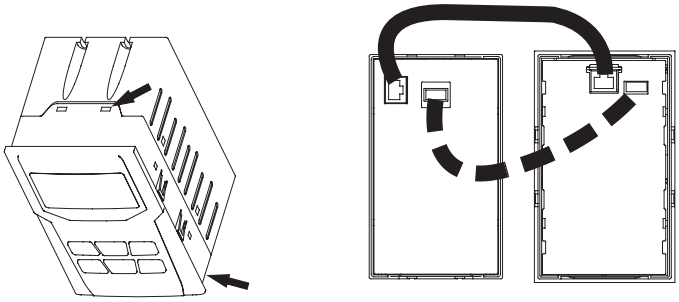

Remarks: For intelligent split-type controller, please slightly lever four places on the display module of the controller with a slot type screwdriver according to the direction shown in the figure, to remove the clip, take out the display module, remove and discard the cable (at the dotted line place), connect them with the network cable (standard when ordering, as shown at the full line) special for the split type, and then install the display on the cabinet gate.

TGQ1N Series Automatic Transfer Switch

10 Installation and use

10.1 63 frame outline and installation dimension

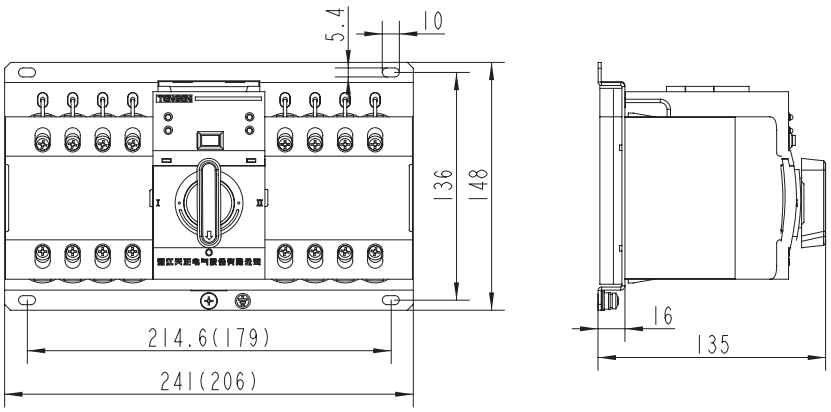

Note: Dimensions in brackets are that of the three-pole product

10.2 125-800 frame outline and installation dimension

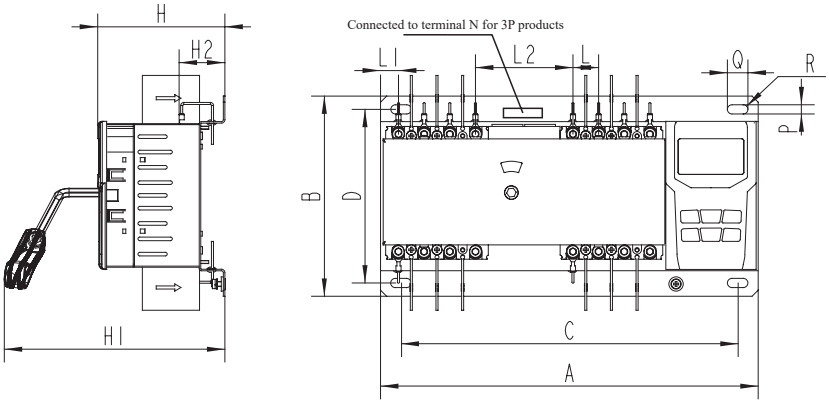

Remarks: The operation handle is usually removed, and is operated in case of emergency operation or manual debugging. Same for the installation dimension of the intelligent spilt type products.

Specification / dimension	A		B	C		D	H		H1		H2	L	L1	L2		P	Q
	3P	4P		3P	4P		L	M	L	M				3P	4P		
TGQ1N-125	340	368	196	300	328	170	120	120	200	200	25	25	15.5	120	95	9	20
TGQ1N-160	380	410	210	335	365	190	133	149	210	229	25	30	25.5	134	104	9	20
TGQ1N-250 ～ 320	425	460	225	385	420	205	135	152	205	222	25	35	21.5	151	116	9	20
TGQ1N-400 ～ 630	552	600	325	492	540	300	183	183	253	253	25	48	31	210.5	162	11	20
TGQ1N-800	720	790	350	660	730	320	186	186	256	256	25	70	41	270	200	11	20

TGQ1N Series Automatic Transfer Switch

10.3 Wiring instructions of 125-800 frame

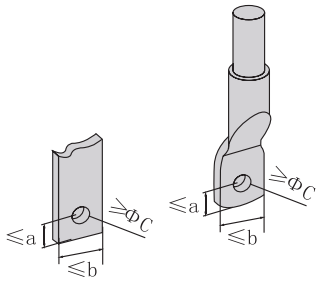

Model	a	b	c
TGQ1N-125	7.5	17	8
TGQ1N-160	8.5	18	8
TGQ1N-250 ～ 320	10	24	8
TGQ1N-400 ～ 630	17	32	10
TGQ1N-800	19	45	12

10.4 Outline dimension and hole size of 125-800 frame intelligent split controller

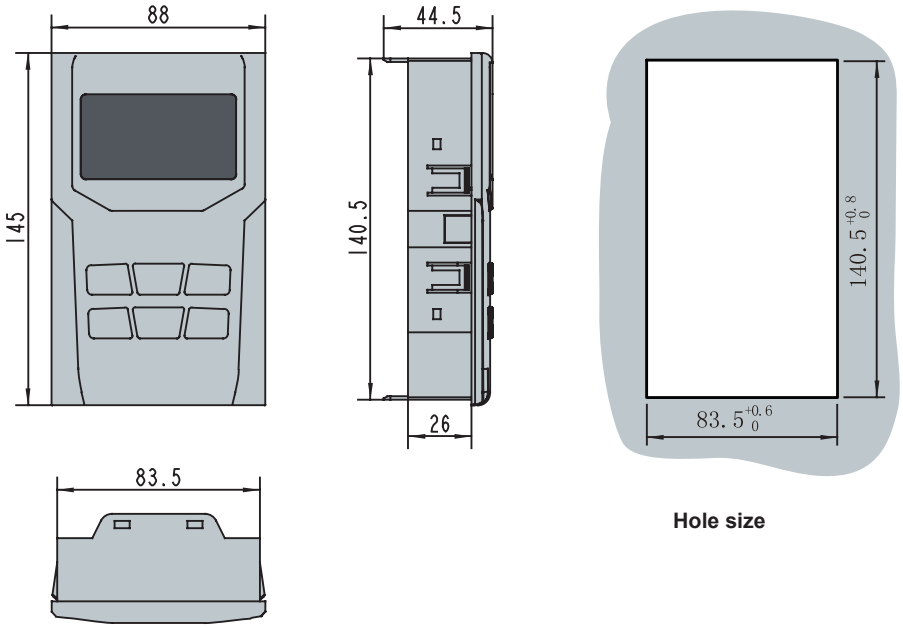

Hole size

11 Ordering Notice

Please provide the following details when ordering:

1. Please specify the required model, current, Number of poles and other information when ordering.
2. For special installation conditions or operation requirements for special places, a user shall provide corresponding technical materials or negotiate with us.

   For example: Order 50 sets of automatic transfer switch with frame current of 125A, breaking capacity of L, 4-pole, split-type, intelligent controller, power grid – power grid, automatic transfer and restoration and rated current of 100A.

   Fill in: TGQ1N-125L/4C100A 50 sets.

TGQ1NP Series Automatic Transfer Switch

1 Overview

TGQ1NP Series Automatic Transfer Switch is suitable for AC 50Hz two-phase/three-phase four-wire two-circuit power supply network with rated operating voltage AC230V(2P)/AC400V(3P/4P) and rated operating current up to 800A, used to connect one or more load circuits to the other power supply from one power supply automatically to the ensure normal power supply of load circuit. This product is used in more important places such as industries, commerce, and high-rise and residential buildings.

2 Type Designation

TG Q 1N P - □/□ □ □ □ □ □ □

- Rated current (16~800)A
- Optional functions (*): W- fire control linkage (only for standard type);
- Controller action mode: No code - automatic change and automatic recovery
- Controller working mode: no code- power grid - power grid F - power grid – generator (only for standard type)
- Controller model: A-economic type; B - standard type
- Number of poles: 2- 2 poles; 3- 3 poles; 4 - 4 poles
- Frame current: 63, 125, 250, 630, 800
- Electrical class: PC
- Design code: 1N
- Automatic transfer switch
- Enterprise characteristic code

Note: (*) The fire control linkage function is optional to the standard type, with the code of W. If the function is not selected, it will be displayed as no code by default. Economic type has no optional function, It is displayed as no code by default.

TGQ1NP Series Automatic Transfer Switch

3 Technical Parameters

Product model	TGQ1NP-63	TGQ1NP-125	TGQ1NP-250
Standard	GB/T 14048.11		
Rated current (A)	AC-230V/50Hz(2P) AC-400V/50Hz		
Rated operating voltage (V)	800		1000
Rated insulation voltage (V)	16/20/25/32 40/50/63	16/20/25/32/40 50/63/80/100/125	125/140/160/180/ 200/225/250
Impulse withstand voltage (KV)	8		12
Rated impulse withstand current Icw (Ka)	5/30ms	10/30ms	
Rated short-circuit making capacity Icm（kA）	8	17	
Number of poles	2P/3P/4P		
Use classes	AC-33B		
Contact conversion time (s)	0.6±20%		
Action conversion time (s)	1.3±10%		
Return time (s)	1.3±10%		
Power-off time (s)	0.6±20%		
Electrical level	PC class		
Installation connection	Fixed vertical installation		
Wiring mode	Screw wiring		
Connection mode	Front-board wiring		
Operation mode	Automatic / manual		
Electromagnetic compatibility	Environment B		
Protection grade	IP20 (excluding the wiring terminals of the main circuit)		
Supply voltage deviation range (V)	160±10% (economical type, standard type)		
Normal operation scope	85%Ue ～ 110%Ue		
The maximum number of conductor allowed to be clamped	1		
Tightening torque of screw (N·m)	2.5	8	10
Screw failure moment (N·m)	3	12	15
Special requirements	None		
Isolation function	Yes		
Switch position	Common (I), power off (O), standby (II)		
Mechanical life (times)	8000(*)		
Electrical life (times)	2000(*)		

Note: (*) maintainable

TGQ1NP Series Automatic Transfer Switch

Table, Continued

Product model	TGQ1NP-400	TGQ1NP-630	TGQ1NP-800
Standard	GB/T 14048.11		
Rated current (A)	AC-400V/415V/50Hz		
Rated operating voltage (V)	1000		
Rated insulation voltage (V)	250/315/350 400	250/315/350 400/500/630	630/700/800
Impulse withstand voltage (KV)	12		
Rated impulse withstand current Icw (Ka)	25/1s		32/1s
Rated short-circuit making capacity Icm（kA）	52.5		67.2
Number of poles	3P/4P		
Use classes	AC-33B		
Contact conversion time (s)	0.6±20%		
Action conversion time (s)	1.3±10%		
Return time (s)	1.3±10%		
Power-off time (s)	0.6±20%		
Electrical level	PC 级		
Installation connection	Fixed vertical installation		
Wiring mode	Screw wiring		
Connection mode	Front-board wiring		
Operation mode	Automatic / manual		
Electromagnetic compatibility	Environment B		
Protection grade	IP20 (excluding the wiring terminals of the main circuit)		
Supply voltage deviation range (V)	160±10% (economical type, standard type)		
Normal operation scope	85%Ue ～ 110%Ue		
The maximum number of conductor allowed to be clamped	2		
Tightening torque of screw (N·m)	22	28	
Screw failure moment (N·m)	26	33	
Special requirements	None		
Isolation function	Yes		
Switch position	Common (I), power off (O), standby (II)		
Mechanical life (times)	5000(*)	4000(*)	3000(*)
Electrical life (times)	1000(*)	1000(*)	1000(*)

Note: (*) maintainable

TGQ1NP Series Automatic Transfer Switch

4 Functions of Controller

Controller		Economy type	Standard type
Installation form		Integrated	Integrated
Rated operating voltage		AC230	
Rated operating frequency		50Hz	
Work location	Closing of normal power supply	■	■
	Closing of standby power supply	■	■
	Opening of dual-way power supply	■	■
Automatic operation	Automatic operation	■	■
	Handle operation	■	■
	Controller button operation	—	—
	Remote control	—	—
Key operation	Switch the button to normal	—	—
	Switch the button to standby	—	—
	Switch the button to double split	—	—
Monitor	Monitoring phase	3-phase for common use, single phase for standby	3-phase for common use, single phase for standby
	Normal undervoltage monitoring	■	■
	Normal overvoltage monitoring	—	—
	Normal voltage loss monitoring	■	■
	Normal loose of phase monitoring	■	■
	Standby undervoltage monitoring	—	—
	Standby overvoltage monitoring	—	—
	Standby voltage loss monitoring	■	■
	Standby loose of phase monitoring	—	—
	Fire-fighting signal power off	—	■
Conversion mode	Automatic transfer and restoration	■	■
	Mutual backup	—	—
	Automatic transfer and without restoration	—	—
Grid connection	Power grid - power grid	■	■
	Power grid - generator	—	□
Display	Screen	Indicator light	Indicator light
	Indication of normal power supply	■	■
	Indication of standby power supply	■	■
	Connection and disconnection of the common power supply	■	■
	Connection and disconnection of the standby power supply	■	■
	Voltage values of the common power supply	—	—
	Voltage values of the standby power supply	—	—
	Manual / automatic	■	■
	Display of time delay	—	—
	Display of fault alarm	—	—
	Display of transfer numbers	—	—
	Fire control linkage status	—	—
	Generator starting state	■	■
Parameter setting	Adjustable transfer time delay (s)	Fixed value	Fixed value
	Adjustable return time delay (s)	Fixed value	Fixed value
	Manual / automatic switch	■	■
	Adjustable undervoltage	Fixed value	Fixed value
	Adjustable overvoltage	—	—
Other functions	Fire control feedback	—	□
	Fault alarm output	—	—
	Position feedback output	■	■
	Fault memory function	—	—
	Communications function	—	—
	Three-phase imbalance setting	—	—
	Transfer failure alarm	—	—
	Wrong wiring alarm	—	—

Remarks: "-" this function is not available; "□" this function is optional; "■" this function is a standard function;

TGQ1NP Series Automatic Transfer Switch

5 Normal working conditions and installation conditions

5.1 Ambient air temperature: -5ºC~ +40ºC, with the average temperature within 24h not exceeding +35ºC;

5.2 Altitude: the altitude of the installation site shall be not more than 2,000 meters;

5.3 Atmospheric conditions: the relative humidity of atmosphere shall not exceed 50% at the maximum ambient temperature of +40ºC, and a higher relative humidity is allowed at the lower temperature. For example, the relative humidity can reach 90% at +20ºC. Special measures shall be taken for occasional condensation due to temperature changes.

5.4 Pollution degree: 3.

6 Features and functions

TGQ1NP Series Automatic Transfer Switch is a new generation of Class PC products combining advanced digital electronic control technology. It has the characteristics of small volume, energy-saving, convenient installation and reliable double interlocking and advanced and complete functions.

6.1 Small volume, novel appearance, sliding closure design, flexible operation, safety and reliability.

6.2 The instantaneous structure design utilizes the dual-spring drive design, which is simple and stable.

6.3 Rotating contact structure and circular arc extinguishing device, with good arc extinguishing performance and long service life of contacts

7 Controller display and operating instructions

7.1 Description of display interface of economical and standard type controllers (Frame current 63A)

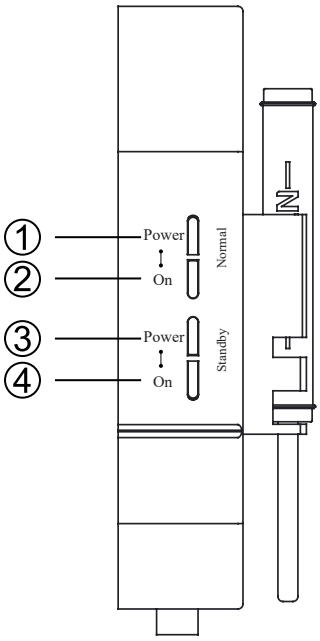

① Normal power indicator
② Normal ON indicator
③ Standby power indicator
④ Standby ON indicator

TGQ1NP Series Automatic Transfer Switch

7.2 Description of display interface of economical and standard type controllers (Frame current 125~630A)

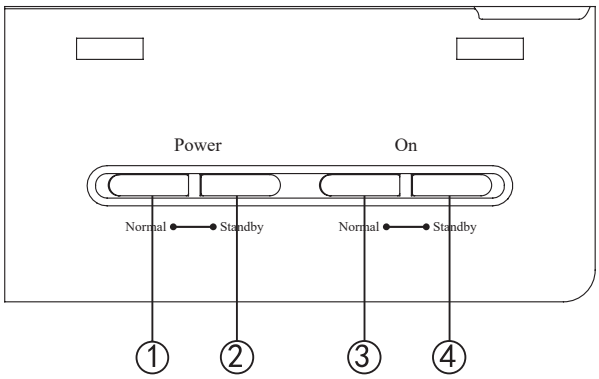

① Normal power indicator;
② Standby power indicator;
③ Normal ON indicator;
④ Standby ON indicator .

8 Product Structure

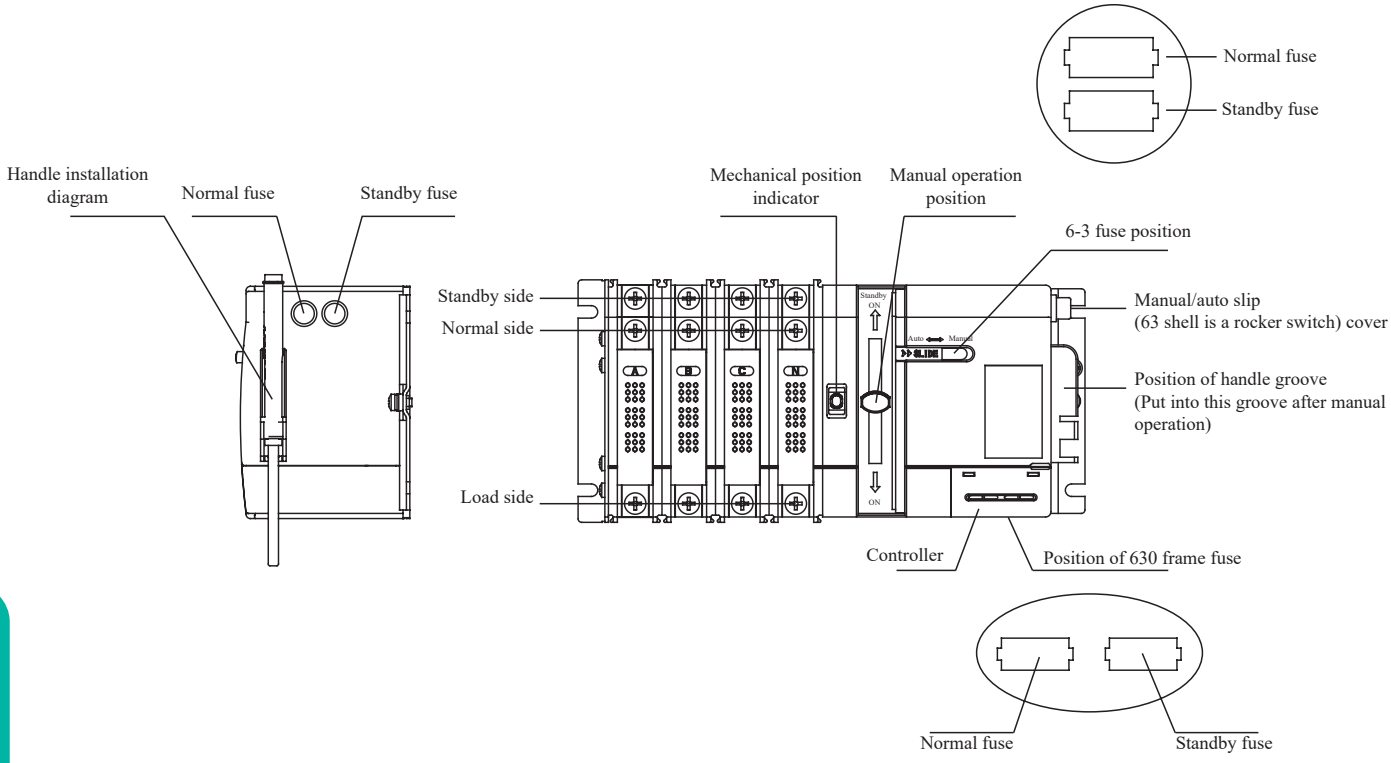

a. Manual/Auto slip cover: To control the control line power inside the switch. When the manual/auto slip cover is at the “Auto” position, the automatic operation of switch can be realized; when the manual/auto slip cover is at the “Manual” position, the switch can be operated manually;

b.Remove the operating handle during normal operation and insert it into the handle groove, and only install it in the event of an emergency.

TGQ1NP Series Automatic Transfer Switch

9 Installation and use

9.1 Wiring diagram of the main circuit of the product (power phase sequence must be consistent)

Wiring of 3-pole main circuit

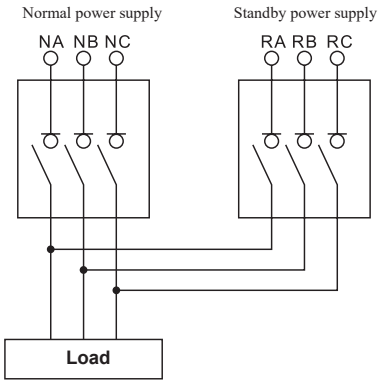

Wiring of 4-pole main circuit

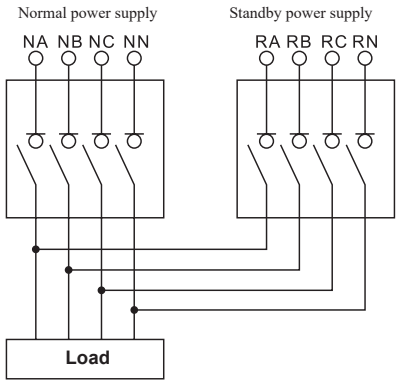

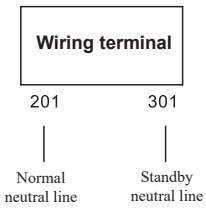

Note: The 3-pole product can operate normally when its neutral line is connected to controller terminal 201 and terminal 301.

Remarks: When the main circuit of the product is connected, ports of the Normal power supply and the standby power supply shall be connected to SCPD by users to protect the equipment and prevent load short circuit and burning of the product and wires.

9.2 Secondary wiring diagram of the controller

9.2.1 Secondary wiring diagram of the economic controller

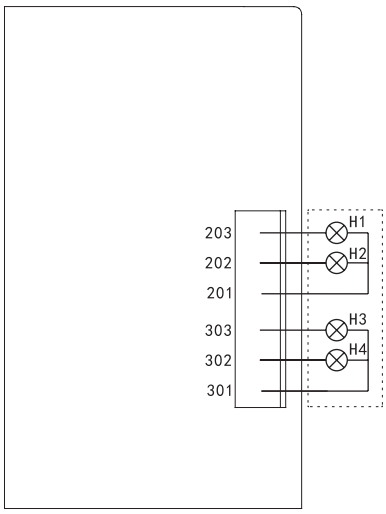

1. Normal signal AC220V output (201, 202, 203): 201 is a common terminal (null line output at 3-pole); 202 is power supply instruction; 203 is closing instruction.
2. Standby signal AC220V output (301, 302, 303): 301 is a common terminal (null line input at 3-pole); 302 is power supply instruction; 303 is closing instruction.
3. The parts in the dotted lines shall be connected by users. H1-H4 are AC signal indicator lights.

TGQ1NP Series Automatic Transfer Switch

9.2.2 Secondary wiring diagram of the basic controller

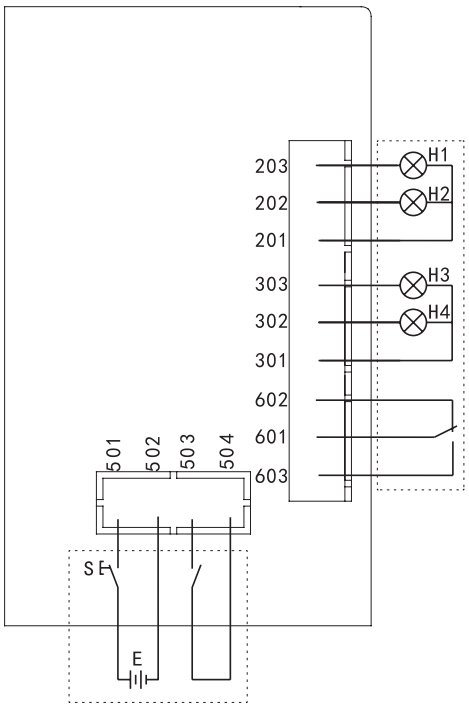

1. Normal signal AC220V output (201, 202, 203): 201 is a common terminal (null line output at 3-pole); 202 is power supply instruction; 203 is closing instruction.
2. Standby signal AC220V output (301, 302, 303): 301 is a common terminal (null line input at 3-pole); 302 is power supply instruction; 303 is closing instruction.
3. Fire control linkage control (501, 502, 503, 504): 501 and 502 are DC24V fire control signal power supply output. 503 and 504 are passive feedback contact output after the implementing fire control.
4. Startup/shutdown control of power generation (601, 602 and 603): 601 is a common terminal; 602 is startup passive contact output; 603 is shutdown passive contact output.
5. The parts in the dotted lines shall be connected by users. H1-H4 are AC signal indicator lights; S is the self-locking button; E is the DC24V signal provided by the fire control center.

TGQ1NP Series Automatic Transfer Switch

10 Outline and Installation Dimensions

10.1 TGQ1NP-63 Product Outline Drawing

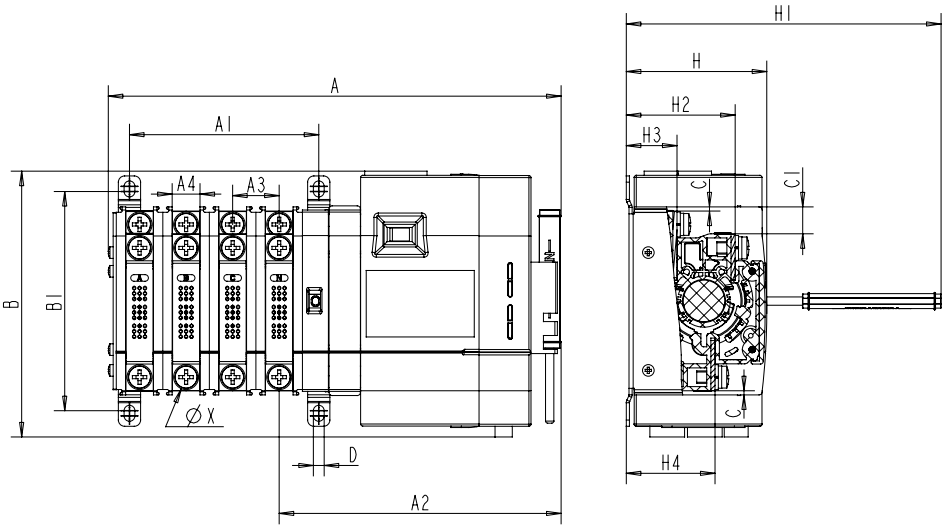

10.2 TGQ1NP-125~800 Product Outline Drawing

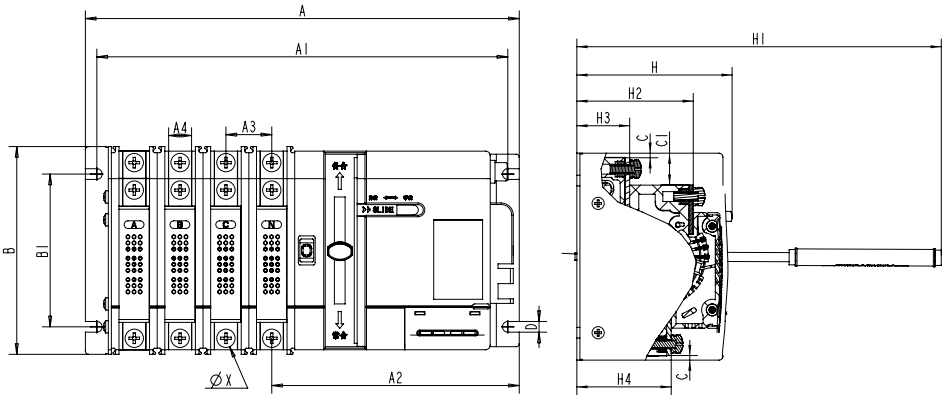

Spec. \ Size

Specification / dimension	A			B	H	A1			B1	A2	A3	A4	H1	H2	H3	H4	C	C1	D	ΦX
	2P	3P	4P			2P	3P	4P												
TGQ1NP-63	171	193	215	138	68	44	66	88	106	136	22	13	152	52	24	43	2	13	5,2	6
TGQ1NP-125	229	259	289	136	102	214	244	274	100	162	30	15	240	77	35	62	4	21	7	6
TGQ1NP-250	302	347	393	170	128	283	328	374	125	207	45,5	25	257	96	44	79	4	22	9	8
TGQ1NP-400	/	414	467	212,5	158	/	397	450	156	251	53	40	344	118	52,5	99	4,5	33	10,5	12
TGQ1NP-630	/	527	595	255	192	/	502	570	188	325	68	49	370	144	65	118	6	40	13	12
TGQ1NP-800	/	527	595	255	192	/	502	570	188	325	68	49	370	144	65	118	6	40	13	12

Remarks: The operation handle is usually removed, and is operated in case of emergency operation or manual operation.

TGQ1NP Series Automatic Transfer Switch

11 Ordering Notice

Please provide the following details when ordering:

1. Please specify the required model, current, Number of poles and other information when ordering.
2. For special installation conditions or operation requirements for special places, a user shall provide corresponding technical materials or negotiate with us.

   For example: Order 50 sets of automatic transfer switch, with frame current of 125A, 4 poles, standard controller, power grid-power generation, rated current of 100A.

   Fill in: TGQ1NP-125/4BF100A 50 pcs.

TGLD Series Automatic Transfer Switch

1 Overview

TGLD series automatic transfer switch is suitable for AC 50Hz three-phase four-wire dual-circuit power supply grid with rated working voltage AC400V and rated current up to 3200A to disconnect the load circuit from one power supply and connect it to the other power supply. This transfer switching equipment has automatic action and optional manual operating functions. When any deviation of common power supply is detected, ATSE can transfer the load to the standby power supply from the common power supply automatically. If the common power supply recovers to the normal state, the load can be returned to the common power supply automatically.

2 Type Designation

TG □ – □ / □ □

- Controller code: By default: Basic type; A: Economic type (Type A is only available for 100 frame)
- Number of poles: 3P: 3 poles, 4P: 4 poles
- Conventional thermal current (A)
- Sales code: LD
- Enterprise code

3 Technical Parameters

Table 1

Model	TGLD-100	TGLD-160	TGLD-250	TGLD-400	TGLD-630
Current spec. (A)	16, 20, 25, 32, 40, 50, 63, 80, 100	100,125 140,160	160, 180, 200, 225, 250	250, 315 350, 400	400, 500 630
Rated operating voltage (Ue)	AC400V 50Hz				
Rated insulation voltage (Ui)	690V				
Rated impulse withstand voltage (Uimp)	8kV				
Rated short-time withstand voltage ICW (kA)	5/30ms	10/30ms			12.6/60ms
Rated short-circuit making capacity Icm (kA)	8	17			25.2
Rated short-circuit limit current Iq (kA)	Front fuse				
	50				
Number of poles	3P、4P				
Usage category	AC-33iB				
Electrical level	Level PC				
Electromagnetic compatibility environment	B environment				
Pollution degree	3				
Installation method	Vertical and fixed				
Wiring method	Wiring via screws				
Operation method	Auto / Manual / Electric button on cabinet door				
Screw tightening torque (N·m)	12	20	20		
Screw failure torque (N·m)	15	50			
Mechanical life(times)	9,000（*）			6,000（*）	4,000（*）
Electrical life (times)	3,000（*）			2,000（*）	2,000（*）
Max. number of conductors allowed	1 piece			2 pieces	
Switch position	Common position (I), standby position (II), OFF position (0)				
Pollution degree	Level 3				
Protection grade	IP00				
Contact transfer time (s)	0.95±30%			0.30±30%	
Operating transfer time (s)	2.9±10% TGLD-100(Economical type): 1.7±10%			1.1±10%	
Return time (s)	2.9±10% TGLD-100(Economical type): 2±10%			1.3±10%	
Power-off time (s)	0.93±30%			0.3±30%	
Power voltage deviation range	Undervoltage transfer: 160V±10%				
Voltage hysteresis V	Undervoltage fixed value (default: 160V) +20V±10%				
Control feature	Voltage loss, undervoltage, phase loss switching				
Rated control power voltage (Us)	AC230V 50Hz				
Controller installation method	Integrated				
Normal working range	85%Ue ~ 110%Ue				
Return condition	Automatic transfer automatic recover (Automatic transfer and non-automatic recover function can be customized)				
Controller power (W)	≤5	≤10			

Note: (*) maintainable

TGLD Series Automatic Transfer Switch

Table 1, continued

Model	TGLD-1000	TGLD-1250	TGLD-1600	TGLD-2000	TGLD-2500	TGLD-3200
Current spec. (A)	630,700 800,1000	1250	1600	2000	2500	3200
Rated operating voltage (Ue)	AC400V 50Hz					
Rated insulation voltage (Ui)	1000V					
Rated impulse withstand voltage (Uimp)	12kV					
Rated short-time withstand voltage ICW (kA)	32/60ms			55/60ms		
Rated short-circuit making capacity Icm (kA)	67.2			121		
Rated short-circuit limit current Iq (kA)	Front circuit breaker			/		
	90			/		
Number of poles	3P、4P					
Usage category	AC-33iB					
Electrical level	Level PC					
Electromagnetic compatibility environment t	B environment					
Pollution degree	3					
Installation method	Vertical and fixed					
Wiring method	Wiring via screws					
Operation method	Auto / Manual / Electric button on cabinet door					
Screw tightening torque (Nm)	25					
Screw failure torque (Nm)	50					
Mechanical life(times)	4,000（*）			2,500（*）		
Electrical life (times)	2,000（*）			500（*）		
Max. number of conductors allowed	4 pcs			4 pcs		
Switch position	Common position (I), standby position (II), OFF position (0)					
Pollution degree	Level 3					
Protection grade	IP00					
Contact transfer time (s)	0.6±30%			0.85±30%		
Operating transfer time (s)	3±10%			2.9±10%		
Return time (s)	3±10%			2.9±10%		
Power-off time (s)	0.60±30%			0.85±30%		
Power voltage deviation range	Undervoltage transfer: 160V±10%					
Voltage hysteresis V	Undervoltage fixed value (default: 160V) +20V±10%					
Control feature	Voltage loss, undervoltage, phase loss switching					
Rated control power voltage (Us)	AC230V 50Hz					
Controller installation method	Integrated					
Normal working range	85%Ue ~ 110%Ue					
Return condition	Automatic transfer automatic recover (Automatic transfer and non-automatic recover function can be customized)					
Controller power (W)	≤10					

Note: (*) maintainable

TGLD Series Automatic Transfer Switch

4 Operating Conditions

4.1 Ambient air temperature: The upper limit of ambient air temperature is +40℃, and the lower limit is -5℃; the mean temperature within 24h does not exceed +35℃;

4.2 Altitude: The altitude at the installation site does not exceed 2,000 meters;

4.3 Atmospheric conditions: The relative humidity of atmospheric air does not exceed 50% at the highest ambient temperature +40℃, and a lower relative humidity is allowed at a lower temperature, such as up to 90% at +20℃. Special measures are taken for condensation occurred occasionally due to temperature changes;

4.4 Pollution degree: Level 3.

5 Features and Functions

5.1 Dual-row combined contact, embedded mechanism, micromotor energy pre-storage and micro-electronics
5.2 control technology is used with short flashover distance.

5.3 Reliable mechanical interlock and electrical interlock are used, and the actuator uses independent on-load isolating switch for safe and reliably operation.

5.4 With zero-across technology used, forcedly zeroing can be realized in case of an emergency (powers from two circuits are cut off simultaneously) to satisfy fire linkage needs.

5.5 A single motor is used to switch the on-load isolating switch for reliable and smooth switching action and small impact without noise.

5.6 The actuator drive motor is powered on only at moment of switching the on-load isolating switch, and the working current is not required at other times during the steady state operation, significantly saving energy.

5.7 The on-load isolating switch has a mechanical interlock device to ensure that the common and standby power supplies work reliably without interference each other.

5.8 With obvious ON/OFF position indication and padlock functions, realize the isolation between the power supply and the load reliably.

5.9 With good safety performance, high automation, and high reliability.

5.10 The product has zero position.

5.11 With convenient installation, the control circuit adopts the plug-in terminal connection.

5.12 Operation function: Manual operation, automatic control operation. Manual operation is prohibited at the Auto state. If manual operation is required, the auto electric lock must be closed to the manual position.

6 Controller Functions (See Table 2)

Table 2

Type	Economic type	Standard type
Manual and automatic switching mode	■	■
Common power monitoring	Three-phase monitoring	Three-phase monitoring
Standby power monitoring	Single-phase monitoring	Single-phase monitoring
Automatic transfer automatic recover	■	■
Automatic transfer and non-automatic recover	-	Customized
Grid-grid, grid-power generation	Power grid – Power grid	■
Phase loss, volage loss, and undervoltage switching	■	■
Fire linkage	-	Active DC24V
External indication signal	Common power, standby power, common ON, standby ON	Common power, standby power, common ON, standby ON
Cabinet door control	I-O-II	I-O-II

Note: "■": Standard function; "-": No this function

TGLD Series Automatic Transfer Switch

7 Controller Operation Process (See Fig. 1 and Fig. 2)

Mode 1: Automatic transfer automatic recover (grid-grid)

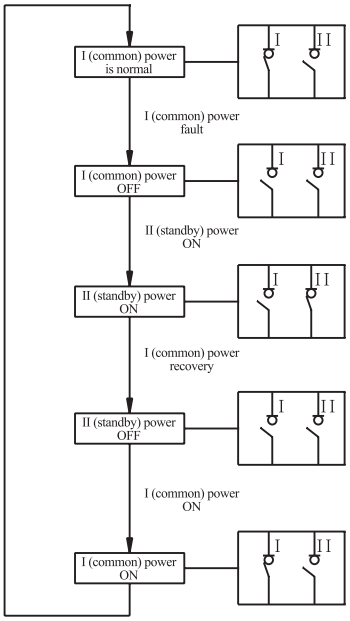

Notes: I Common side contact
II Standby side contact

Fig. 1

Mode 2: Automatic transfer automatic recover (grid-power generation)

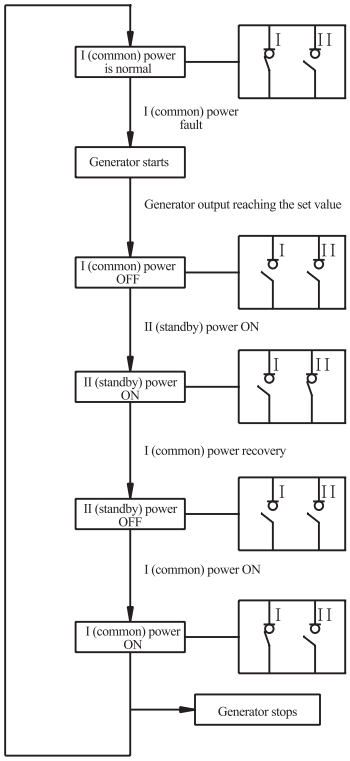

Fig. 2

8 Product Structure

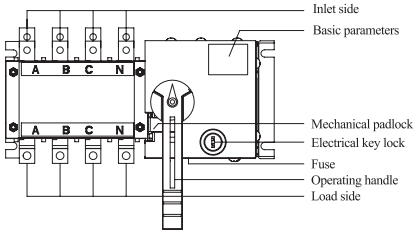

TGLD-100/4 structure diagram

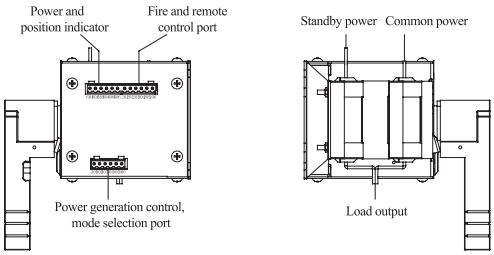

TGLD-100/4 structure diagram

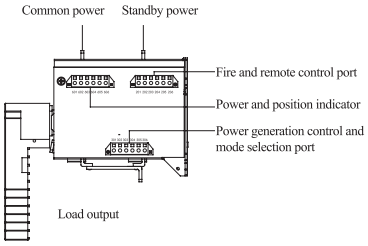

TGLD-160~630/4 Structure Diagram

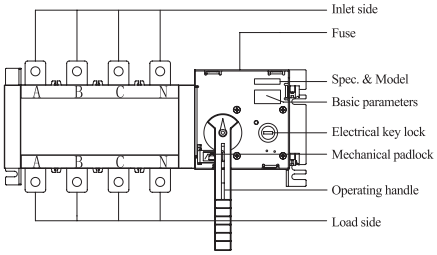

TGLD-160~630/4 Structure Diagram

TGLD Series Automatic Transfer Switch

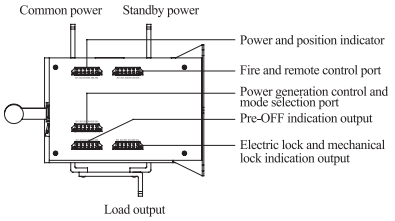

TGLD-1600/4 Structure Diagram

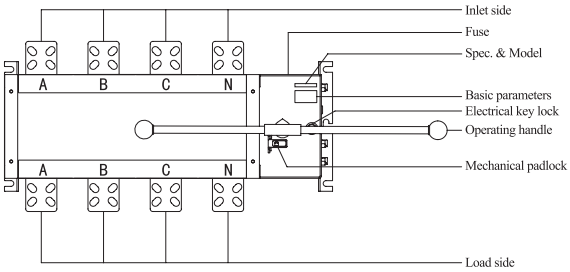

TGLD-1600/4 Structure Diagram

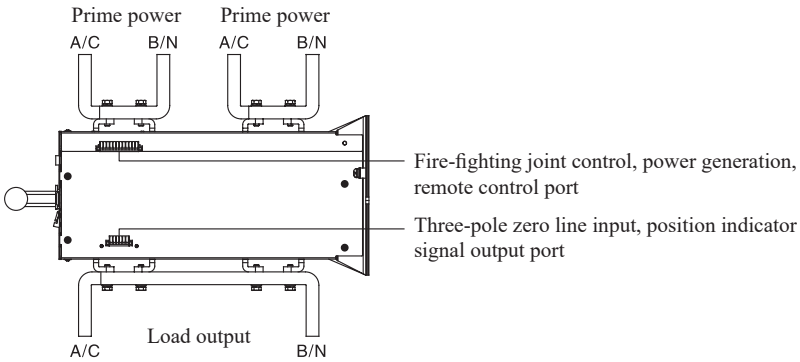

TGLD-3200/4 Structure Diagram

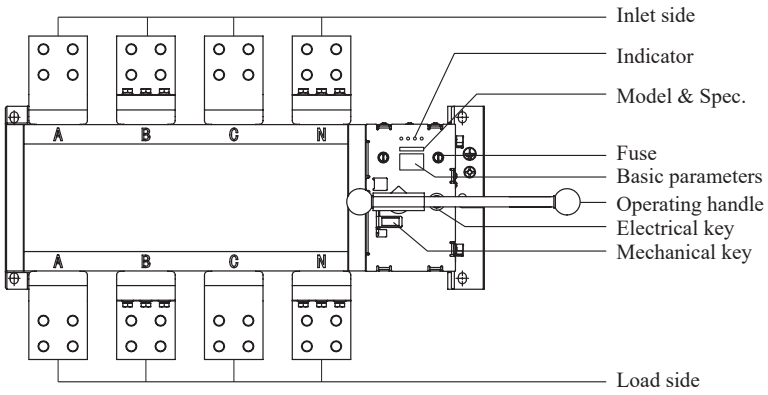

TGLD-3200/4 Structure Diagram

Notes:

a.Electric key lock: To control the control line power inside the switch; turning the electric lock to the “Auto” position realizes the auto and remote control operation of switch; turning the electric lock to the “Manual” position realizes the manual operation of switch.

b.Operating handle: Close the electric lock when operating the operating handle.

c.Mechanical padlock: Before inspection, operate the operating handle to turn the switch to the O position, and pull up and lock the padlock (pulling up the mechanical padlock will cut off the control power inside the switch, so that the switch cannot be turned on and the handle cannot be operated).

d.The operating handle is usually removed and stored. It can be used only when the load is disconnected for emergency operation.

TGLD Series Automatic Transfer Switch

9 Electrical Wiring Diagram

9.1 Main circuit wiring

3-pole main circuit wiring

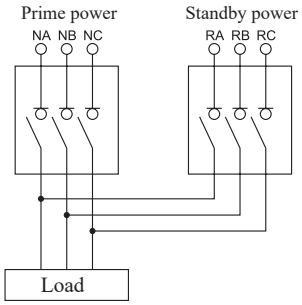

Note: The zero line of 3-pole product is connected to the side terminals 603 and 606; 2000~3200A is connected to 301 and 306 for prime operation

4-pole main circuit wiring

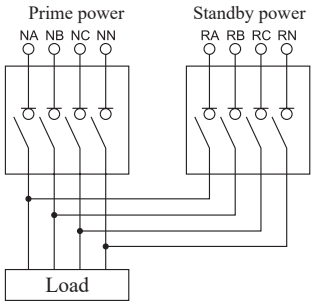

Note: To connect main circuit of product, the upper ports of prime power and standby power shall be connected (SCPD) by user for electrical protection to prevent short-circuit of load, and burns to product and line.

9.2 Auxiliary and control circuit wiring

9.2.1 TGLD-100 Economic type

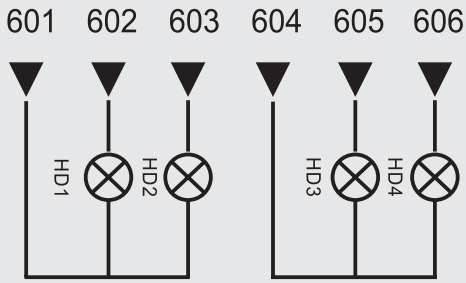

Note: HD1 is the common power indicator, HD2 is the ON indicator, HD3 is the standby power indicator, and HD4 is the ON indicator. For a 3-pole product, please connect the common zero line to 601, and the standby zero line to 64 to ensure the normal operation of the product.

a. Common position indicator:
601 and 602 are the common power indicators, and the common working zero line is input from 601 for 3-pole product;
601 and 603 are common power ON indicators, and the signal outputs are AC220V active output.

b. Standby position indicator:
604 and 605 are standby power indicators, and the standby working zero line is input from 604 for 3-pole product;
601 and 603 are common power ON indicators, and the signal outputs are AC220V active output.

TGLD Series Automatic Transfer Switch

9.2.2 TGLD-100~630 type

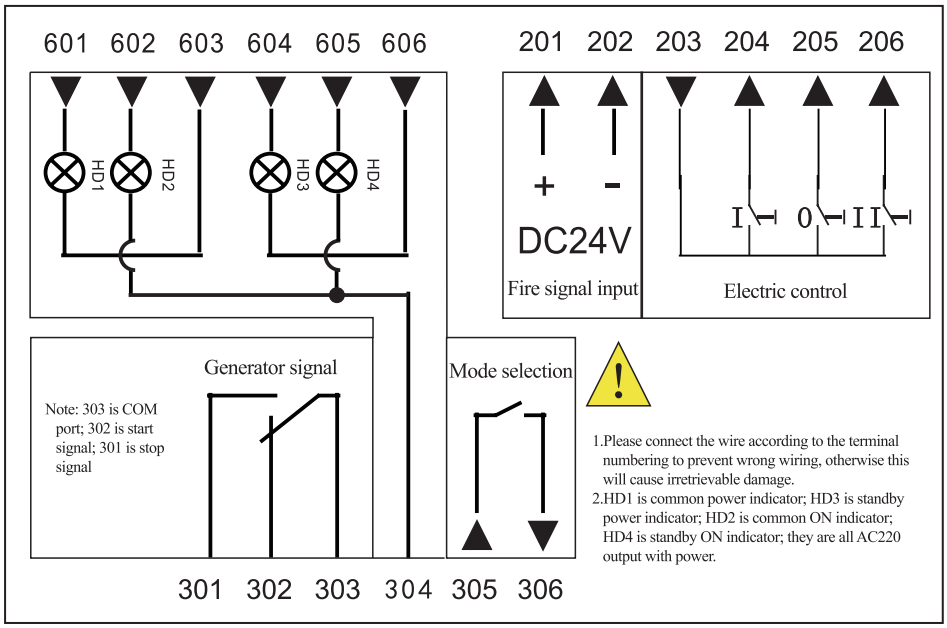

a.Common position indicator: 603 and 601 are common power indicators; for 3-pole product, the common working zero line is connected from 603; 602 and 304 are common power ON indicators, and signal outputs are all AC220V output with power.

b.Standby position indicator: 606 and 604 are standby power indicators; for 3-pole product, the standby working zero line is connected from 606; 605 and 304 are standby power ON indicators, and signal outputs are all AC220V output with power.

c.Fire zeroing: 201 is DC24V positive, and 202 is DC24V zero (DC24V is provided by the Fire Center).

d.Electric control (cabinet door control): 203 is common port; 204 is position I; 205 is position 0; 206 is position II.

e.Generator start/stop control: 303 is common port; 302 is start signal; 301 is stop signal.

f.Mode selection: When 305 and 306 are disconnected: if 204, 205, and 206 input button signals are loose, ATSE will return automatically; when 305 and 306 are short-connected: 204, 205, and 206 input button signals are inching-controlled, and ATSE will not return automatically once the button is release.

TGLD Series Automatic Transfer Switch

9.2.2 TGLD-1000~1600 type

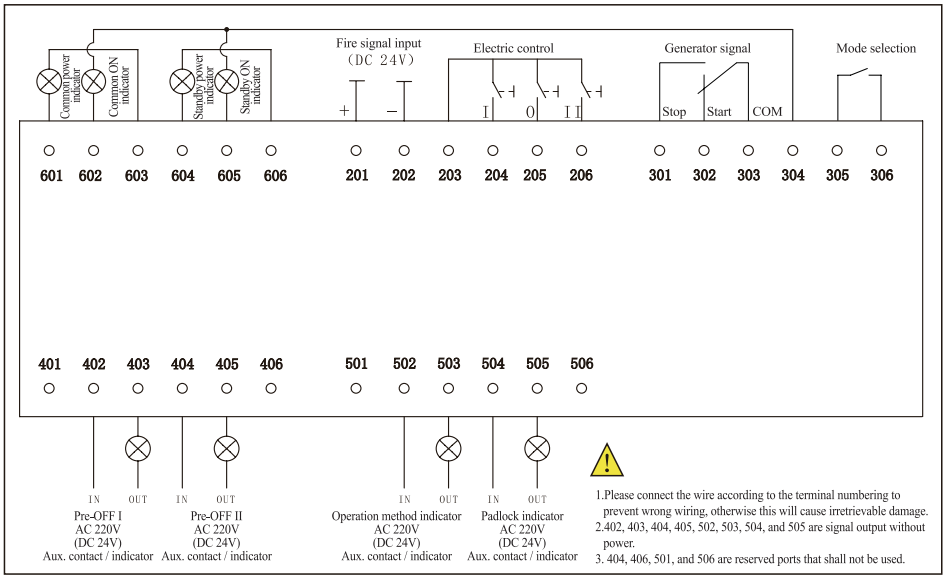

a.Common position indicator: 603 and 601 are common power indicators; for 3-pole product, the common working zero line is connected from 603; 602 and 304 are common power ON indicators, and signal outputs are all AC220V output with power.

b.Standby position indicator: 606 and 604 are standby power indicators; for 3-pole product, the standby working zero line is connected from 606; 605 and 304 are standby power ON indicators, and signal outputs are all AC220V output with power.

c.Fire zeroing: 201 is DC24V positive, and 202 is DC24V zero (DC24V is provided by the Fire Center).

d.Electric control (cabinet door control): 203 is common port; 204 is position I; 205 is position 0; 206 is position II.

e.Generator start/stop control: 303 is common port; 302 is start signal; 301 is stop signal.

f. Mode selection: When 305 and 306 are disconnected: if 204, 205, and 206 input button signals are loose, ATSE will return automatically; when 305 and 306 are short-connected: 204, 205, and 206 input button signals are inching-controlled, and ATSE will not return automatically once the button is release.

h.402 and 403 are common pre-OFF indicators; 404 and 405 are standby pre-OFF indicator; signal output without power.

i. 502 and 503 are padlock indicators; 504 and 505 are mechanical lock indicators; they are all signal outputs without power.

9.3 TGLD-160~1600 wiring terminal wiring operation

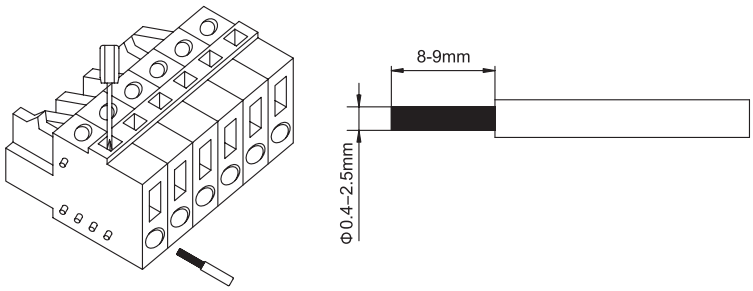

Forcedly press the wire downwards with a small slotted screwdriver for installation, as shown in figure.

TGLD Series Automatic Transfer Switch

9.4 TGLD-2000~3200 panel indicator and auxiliary and control circuit wiring

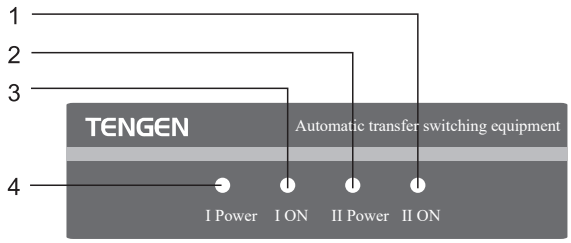

1. Standby ON indicator;
2. Standby power indicator;
3. Prime ON indicator;
4. Prime power indicator.

TGLD-3200

9.5 TGLD-2000~3200 Secondary circuit wiring

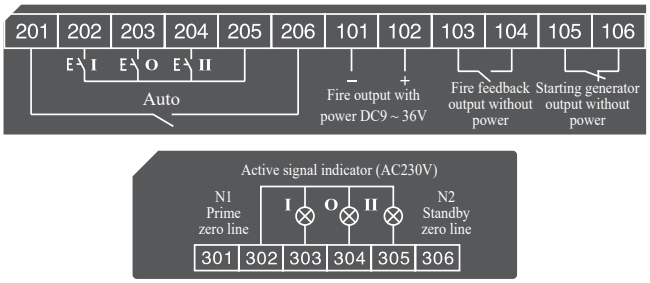

a. Ports 201 and 206 are short connected for remote control with wires (cabinet door control transfer), and can be powered off automatically;

b. Port 205 is a remote control COM port;

c. When ports 205 and 202 detect a closed signal, source “I” power supply works prime and ATSE is transferred to source “I”;

d. When ports 205 and 204 detect a closed signal, source “II” power supply works prime and ATSE is transferred to source “II”;

e. When ports 205 and 203 detect a closed signal, one-source or two-source of source “I” power supply or source “II” power supply is prime and ATSE is transferred to the “O” position;

f. Ports 101 and 102 are fire power supply DC24V (9~36V, 101 is a negative pole and 102 is a positive pole; do not connect them reversely) input, and ATSE executes the fire control linkage function;

g. Ports 103 and 104 are output feedback signals after ATSE executes the fire control linkage function, and one set of passive signal dry contacts;

h. Ports 105 and 106 are generator start signals. Connection them to the generator controller can realize the automatic start/stop of generator controller.

i. Working zero line input for three-pole: 301 is a prime zero line, and 306 is a standby zero line;

j. 302 is a COM port of position indicator signal;

k. 303 is an indicator signal of “I” position, with active 220V;

l. 304 is an indicator signal of “O” position, with active 220V;

m. 305 is an indicator signal of “II” position, with active 220V;

TGLD Series Automatic Transfer Switch

10 Outline and Installation Dimensions

10.1 TGLD-100 outline and installation dimensions (Standard type)

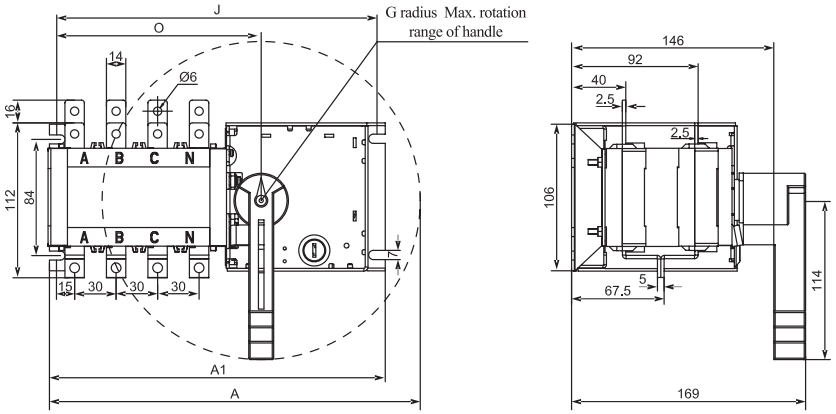

Current	Outline and installation dimensions				
	A	A1	J	O	G
100/3	235	232	222	113	114
100/4	270	244	234	143	114

10.2 TGLD-100 Outline and Installation Dimensions (Economic type)

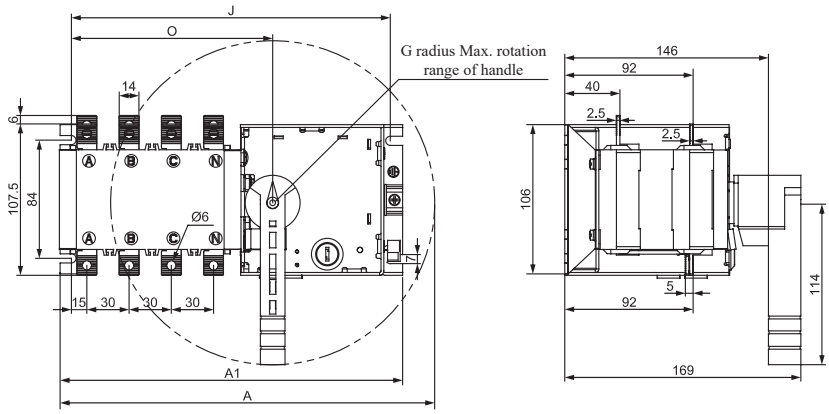

Current	Outline and installation dimensions				
	A	A1	J	O	G
100/3	235	232	222	113	114
100/4	270	244	234	143	114

TGLD Series Automatic Transfer Switch

10.3 TGLD-160~1600 outline and installation dimensions

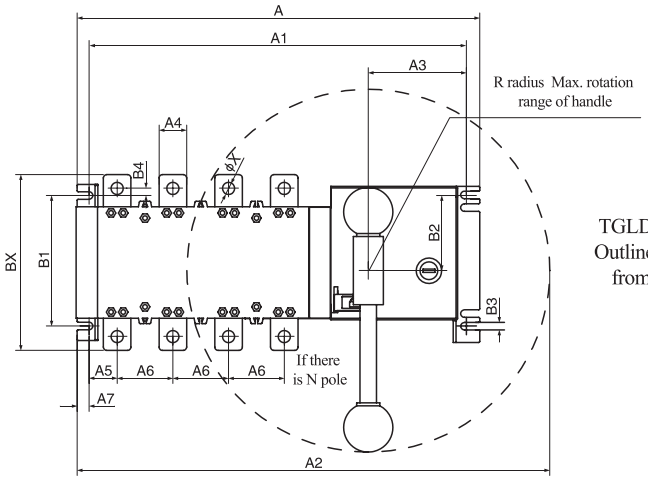

TGLD-160～1600
Outline dimensions
from front view

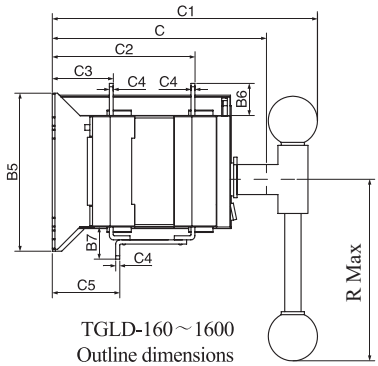

TGLD-160～1600
Outline dimensions
from side view

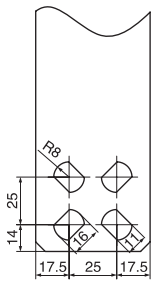

1000A
Connection terminal

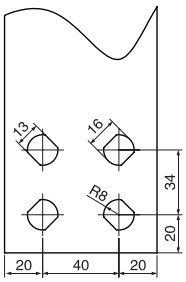

1250A～1600A
Connection terminal

	Outline and installation dimensions table																							
Current	A	A1	A2	A3	A4	A5	A6	A7	BX	B1	B2	B3	B4	B5	B6	B7	C	C1	C2	C3	C4	C5	ΦX	R
160/3	273	263	315	98	20	22	36	9	144	91	52	6	3	141	25	34	194	232	131	60	3.5	63	8.5	150
160/4	308	288	350	98	20	22	36	9	144	91	52	6	3	141	25	34	194	232	131	60	3.5	63	8.5	150
250/3	320	300	362	110	25	28	50	10	177	92	52	6	16	142	30	37	209	240	145	62	3.5	63	11	150
250/4	365	345	412	110	25	28	50	10	177	92	52	6	16	142	30	37	209	240	145	62	3.5	63	11	150
400/3	369	351	600	91.5	32	39	65	9	262	179	95	9	28	218.5	40	62	292	325	196	82	5	82	11	331
400/4	434	416	665	91.5	32	39	65	9	262	179	95	9	28	218.5	40	62	292	325	196	82	5	82	11	331
630/3	369	351	600	91.5	40	39	65	9	272	179	95	9	28	218.5	50	62	292	325	196	82	5	82	12	331
630/4	434	416	665	91.5	40	39	65	9	272	179	95	9	28	218.5	50	62	292	325	196	82	5	82	12	331
1000/3	515	495	870	82	60	65	120	12.5	345	220	116	11	-	250	54	90	340	380	254	110	8	110	-	455
1000/4	635	615	990	82	60	65	120	12.5	345	220	116	11	-	250	54	90	340	380	254	110	8	110	-	455
1250/3	515	495	870	82	80	73	120	12.5	370	220	116	11	-	250	70	102	340	380	254	110	8	110	-	455
1250/4	633	610	990	82	80	73	120	12.5	370	220	116	11	-	250	70	102	340	380	254	110	8	110	-	455
1600/3	515	495	870	82	80	73	120	12.5	370	220	116	11	-	250	70	102	340	380	255	111	10	111	-	455
1600/4	633	610	990	82	80	73	120	12.5	370	220	116	11	-	250	70	102	340	380	255	111	10	111	-	455
Note: BX, B7, and C5 are dimensions of load																								

TGLD Series Automatic Transfer Switch

10.4 TGLD-2000~3200 Outline and Installation Dimensions (Two-inlet and one-outlet)

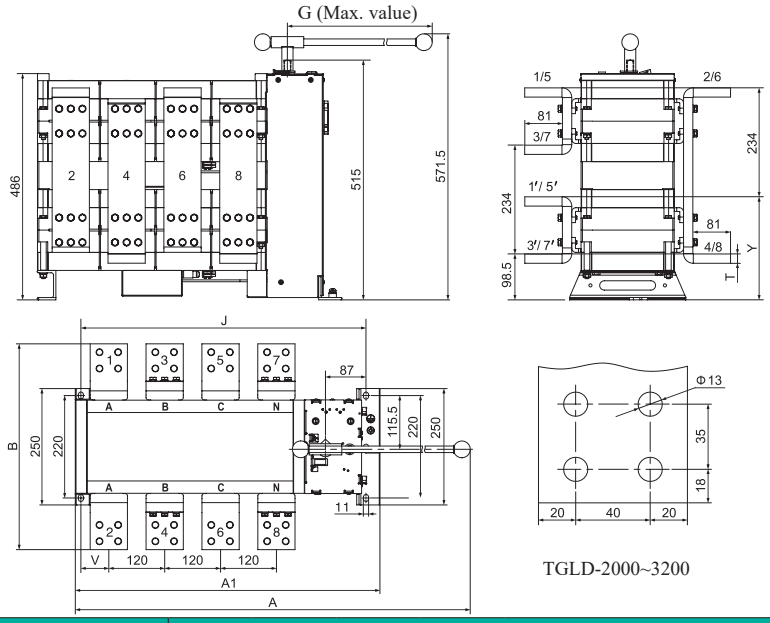

TGLD-2000~3200

Current	Outline and installation dimensions							
	A	A1	B	G	A	A1	B	G
TGLD-2000/3P	785	541	422	360	499	10	56	212
TGLD-2000/4P	1080	655	422	540	613	10	60	212
TGLD-2500/3P	785	541	432	360	499	15	56	217
TGLD-2500/4P	1080	655	432	540	613	15	60	217
TGLD-3200/3P	785	541	442	360	499	20	56	222
TGLD-3200/4P	1080	655	442	540	613	20	60	222

Note: The shell operating handle is removed normally for all series, and will be used for emergency operation or manual operation.

10 Outline and Installation Dimensions

Please specify the following items when ordering:

11.1 Please specify the product model, current specification, and number of poles when ordering.

11.2 For any special installation conditions or special working site, the corresponding technical information shall be provided by user or contact our company for this.

Example: To order TGLD-100 type, rated current 100A, 4-pole, 1 piece; please specify: TGLD-100/4P 100A 1 piece.

TGQ1NPL Series Automatic Transfer Switch

1 Overview

TGQ1NPL Series Automatic Transfer Switch is suitable for AC 50Hz single-phase two-wire/three-phase four-wire dual-circuit power supply grid with rated working voltage AC230V/AC400V and rated current up to 1600A to disconnect the load circuit from one power supply and connect it to the other power supply. This transfer Switch has automatic action and optional manual operating functions. When any abnormity of prime power supply is detected, ATSE can transfer the load to the standby power supply from the prime power supply automatically. If the prime power supply recovers to the normal state, the load can be returned to the prime power supply automatically in the automatic transfer automatic recover mode.

2 Type Designation

TG Q 1N P L - 125 □ / □ □ □ □ □ □

- Rated current:
  - 63: 16A, 20A, 25A, 32A, 40A, 50A, 63A
  - 125: 63A, 80A, 100A, 125A
  - 250: 125A, 140A, 160A, 180A, 200A, 225A, 250A
  - 630: 250A, 315A, 350A, 400A, 500A, 630A
  - 1600: 630A, 700A, 800A, 1000A, 1250A, 1600A
- Controller working mode:
  - Default: Grid-grid
  - F: Grid-generator (this code is available for standard mode; the intelligent mode has grid-generator function as standard)
- Optional communication:
  - No code: Without communication
  - T: With communication (only for standard and intelligent modes)
- Controller model:
  - A: Economy type (only for two-segment type)
  - B: Standard type
  - C: Intelligent type (1600 frame just have C type)
- Structure type:
  - Y: Integrated type
  - No code: Split type (only for intelligent mode)
- Number of poles:
  - 2: Two-pole (only for 63~250 shell frame)
  - 3: Three-pole
  - 4: Four-pole
- Working position:
  - II: Two-segment type
  - III: Three-segment type
- Resistive current: 63/125/250/630/1600
- Drive method:
  - L: Excitation drive
- Electrical grade: P: PC class
- Design code: 1N
- Automatic transfer Switch
- Enterprise code

TGQ1NPL Series Automatic Transfer Switch

3 Technical Parameters

3.1 Main parameters

Model	TGQ1NPL-63		TGQ1NPL-125		TGQ1NPL-250		TGQ1NPL-630		TGQ1NPL-1600
Rated current	16A, 20A, 25A, 32A, 40A, 50A, 63A		63A, 80A, 100A, 125A		125A, 140A, 160A, 180A, 200A, 225A, 250A		250A, 315A, 350A, 400A, 500A, 630A		630A, 700A, 800A, 1000A, 1250A, 1600A
Working position (II: Two-segment type; III: Three-segment type)	II	III	II	III	II	III	II	III	III
Rated working voltage	AC230V/AC400V 50Hz								
Number of poles	2/3/4								
Wiring method	Before-plate								
Rated limit short-circuit current (Iq, kA)	120								
Operating current A (AC230V)	3				4		6		20
Trip current A (AC230V)	-	0.7	-	0.7	-	1	-	1,2	3
Switching transfer time (ms) ≤ (not including controller delay and filter time)	75	100	75	100	75	100	120	150	100
Usage category	AC-33A				AC-33B		AC-33B		AC-33iA(630A,700A, 800A,1000A,1250A), AC-33B(1600A)
Electrical life (times)	10000(*)						6000(*)		6000(*)
Mechanical life (times)	30000(*)						20000(*)		10000(*)
Controller type (A: Economy type; B: Standard type; C: Intelligent type)	A/B/C	B/C	A/B/C	B/C	A/B/C	B/C	A/B/C	B/C	C
Screw tightening torque N•m	2,5		10		12		28		22
Screw failure torque N•m	3		15		18		33		26
Operating method	Manual / Auto / Remote operation (with communications)								
Delay time range (s)	Fixed (A type), 0~30 (B type), 0~240 (C type)								
Power voltage deviation range (V)	A/B (undervoltage): 165±10%; C (undervoltage): 100~200 Adjustable ±10%; C (overvoltage): 200~300 Adjustable ±10%								
Normal operating range	85%Us ~ 110%Us								
Special requirements	No (normal installation conditions)								
Isolation function	II: No; III: Yes								
Switch position	II: Prime (I), Standby (II); III: Prime (I), Power-off (0), Standby (II)								

Note: (*) maintainable

TGQ1NPL Series Automatic Transfer Switch

3.2 Controller parameters

Controller		Economy type A	Standard type B	Intelligent type C
Installation method		Embedded	Embedded	Split type
Rated operating voltage		AC230	AC230	AC230
Rated operating frequency		50Hz	50Hz	50Hz
Working position	Prime power ON	■	■	■
	Standby power ON	■	■	■
	Two-way power OFF	–	Δ	Δ
Auto operation	Manual	■	■	■
	Via handle	■	■	■
	Via keys	–	■	■
Key operation	Pressed to Prime mode	–	■	■
	Pressed to standby mode	–	■	■
	Pressed to two-way mode	–	Δ	Δ
Monitoring	Monitoring phase	Prime three-phase Standby single-phase	Three-phase	Three-phase
	Prime undervoltage monitoring	■	■	■
	Prime overvoltage monitoring	—	■	■
	Prime voltage-loss monitoring	■	■	■
	Prime phase loss monitoring	■	■	■
	Standby undervoltage monitoring	—	■	■
	Standby overvoltage monitoring	—	■	■
	Standby voltage-loss monitoring	■	■	■
	Standby phase loss monitoring	■	■	■
	Fire signal to cut off non-fire power	—	△	△
Transfer mode	Automatic transfer automatic recover	■	■	■
	Mutually reserved	—	■	■
	Automatic transfer and non-automatic recover	—	■	■
Grid connection	Grid-grid	■	■	■
	Grid-generator (with generator controller)	—	□ (choose one from two)	■
Display	Screen	LED indictor	LED indictor	LCD Chinese + LED indicator
	Prime power is normal or not	■	■	■
	Standby power is normal or not	■	■	■
	Prime power OFF/ON	■	■	■
	Standby power OFF/ON	■	■	■
	Prime power voltage	—	—	■
	Standby power voltage	—	—	■
	Manual / Auto	■	■	■
	Delay time display	—	■	■
	Fault alarm display	■	■	■
	Fire linkage state	—	■	■
	Generator start state	—	□	■
Parameter setting	Transfer delay adjustable	—	0 ~ 30s	0 ~ 240s
	Return delay adjustable	—	0 ~ 30s	0 ~ 240s
	Manual / Auto switchable	■	■	■
	Generator start delay adjustable	—	—	0 ~ 240s
	Generator shutdown delay adjustable	—	—	0 ~ 240s
	Undervoltage adjustable	—	—	100 ~ 200V
	Overvoltage adjustable	—	—	200 ~ 300V
Other functions	Fire control feedback	—	△	△
	Fault alarm output	—	□ (choose one from two)	■
	Position feedback output	—	■	■
	Fault memory function	—	—	■
	Communication function	—	□	□
	Transfer failure alarm	—	—	□ (Programmable output, see 7.3.3)
	Wrong wiring alarm	—	—	□

■ – Standard; Δ - Two-segment type: No; Three-segment type: Yes □ - Optional: --- No.

TGQ1NPL Series Automatic Transfer Switch

4 Operating Conditions

4.1 Ambient air temperature: The upper limit of ambient air temperature is +40℃, and the lower limit is -5℃; the mean temperature within 24h does not exceed +35℃;

4.2 The ultimate ambient temperature is ranged -35℃ to +70℃. To customized the low-temperature product, please contact the production backstage;

4.3 Altitude: The altitude at the installation site does not exceed 2,000 meters;

4.4 Atmospheric conditions: The relative humidity of atmospheric air does not exceed 50% at the highest ambient temperature +40℃, and a lower relative humidity is allowed at a lower temperature, such as up to 90% at +20℃. Special measures are taken for condensation occurred occasionally due to temperature changes;

4.5 Pollution degree: 63 shell frame current: 2; 125 and above shell frame current: 3;

4.6 Installation category: Class IV;

4.7 Installation inclination: Fixed in the cabinet, with max. inclination of ± 22.5°.

4.8 Flashover distance: The flashover distance is 30m under AC 400V, and is 60mm under AC 690V.

5 Features and Functions

5.1 TGQ1NPL series ATSE consists of the switch and the switching control. The switch is driven by the solenoid coil providing fast switching speed. AC220 of prime and standby power is used as the operating voltage of the switching controller.

5.2 The dedicated integration ATSE is realized for types A and B. It is of the compact structure with the intelligent controller installed inside the switch. The product can be activated only when the main circuit is powered on for convenient wiring by users; meanwhile, the three-segment B type has a generator start signal, fire input without power, fire feedback without power, and prime and standby power ON indication.

5.3 The type C has the external split-formed structure, and a dedicated cable is used between the controller and the switch for more convenient installation and wiring.

5.4 Integrated and split modes have overvoltage, undervoltage and phase loss detection of two-way three-phase power supply.

6 Manual Operation and Precautions

6.1 I power turn-on method: The “Two-way power OFF” key (see Figure) is pressed with a screwdriver making the power I and II both at the OFF position (this operation is not required for II type two-sgement mode); Turn the manual shaft in the arrow direction with a wrench making the power I at the ON position.

6.2 II power turn-on method: The “Two-way power OFF” key (see Figure) is pressed with a screwdriver making the power I and II both at the OFF position (this operation is not required for II type two-sgement mode); press and hold the “Guide II power” while turning the manual shaft in the arrow direction making the power II at the ON position.

6.3 Manual trip method: (Only for III type three-segment mode; switching is available rather than trip for II type two-segment mode); remove the manual operating handle, and insert the screwdriver into the left “Two-way power OFF” hole and press it inwards for trip (the ON/OFF indicator is used to indicate whether the switch trips or not).

TGQ1NPL Series Automatic Transfer Switch

6.4 Two-segment type operation method: As shown in figure, conduct the cyclic operation in the operation direction, and check the indicators I and II to determine the position state.

Warning: The operating handle is operated only in the manual mode, and must be removed after operation.

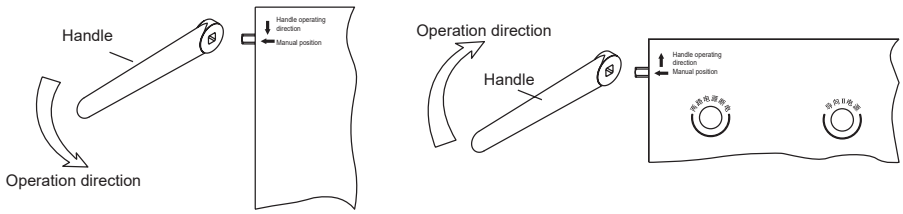

Two-segment type operation precaution diagram

Three-segment type operation precaution diagram

TGQ1NPL–63~ 630

6.5 I common input method: Press the “two-way power supply off” button to make the common and standby are in the O position and to make the handle press the manual shaft in the arrow direction; at this time the switch issues an obvious closing sound, and turn the I common window to the I position, so that the closing is completed.

6.6 II standby input method: Press the “two-way power supply off” button to make the common and standby are in the O position, and press and hold the “Guide II standby” button, and press the manual shaft downwards in the arrow direction; at this time the switch issues an obvious closing sound, and turn the II standby window to the II position, so that the closing is completed.

6.7 Manual two-way power outage operation: To ensure the safety, press the “two-way power supply off” button in the power outage state to open two circuits (please confirm whether two circuits of the switch are both in the OFF “O” position through the O/I indicator window.

Warning: The operating handle is operated only in the manual model, and must be removed after the operation is completed.

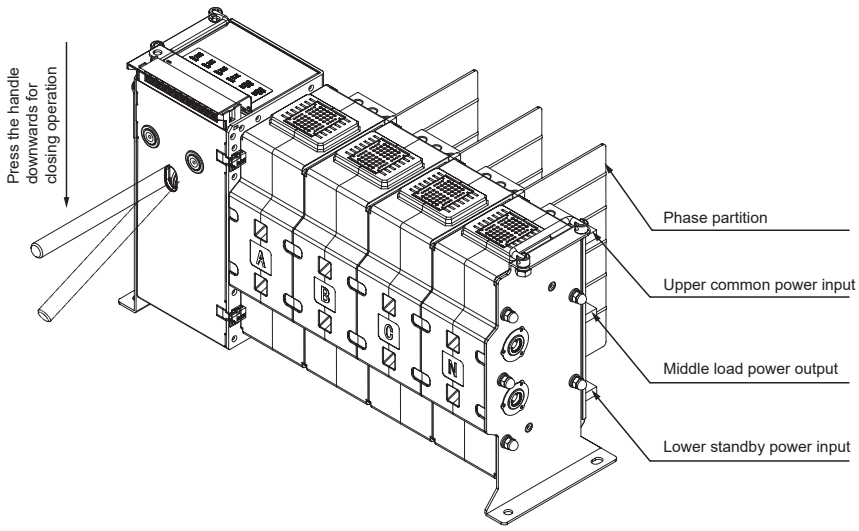

TGQ1NPL–1600

TGQ1NPL Series Automatic Transfer Switch

7 Controller Display and Operation Instruction

7.1 Operation instruction of A type controller (economy type)

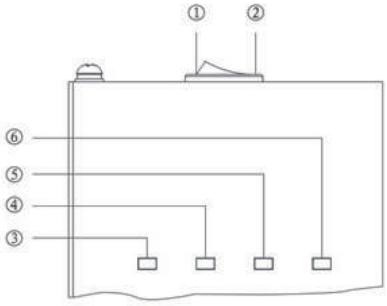

A type controller (embedded, integrated)

1. Manual position of rocker switch;
2. Auto position of rocker switch (see Figure);
3. Prime power indication;
4. Prime ON indication;
5. Standby power indication;
6. Standby ON indication.

7.2 Operation instruction of B type controller (standard type)

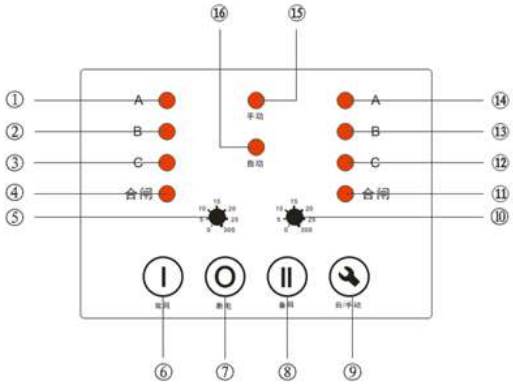

B type controller (embedded, integrated)

1, 2, and 3 are Prime ABC phase indicators

4 Prime power ON indicator

5 Transfer delay adjustment;

6 Prime ON key in the manual mode;

7 OFF key in the manual mode (this key is inactivated for two-segment type product)

8 Standby ON key in the manual mode;

9 Auto/Manual switching key;

10 Return delay adjustment

11 Standby power ON indicator

12, 13, and 14 are standby ABC phase indicators;

15 Manual state indicator

16 Auto state indicator

7.2.1 Mode setting

- Press the “I prime” and “II standby” for 10s to enter the mode setting function in the Auto state; at this time, the “A” and “B” lights or the “Manual” and “Auto” lights of I power are lit.

  The “A” light is on to indicate automatic transfer automatic recover; the “Manual” light is on to indicate the Automatic transfer and non-automatic recover;

  The “B” light is on to give priority to the I prime; the “Auto” light is on to give priority to the II Standby.

- Mode switching:

  With the “I prime” button pressed, the switching between the automatic transfer automatic recover mode and the Automatic transfer and non-automatic recover mode is available.

  With the “II standby” button pressed, the switching between the I prime priority mode and the II Standby priority mode is available.

- Exit mode:

  Press the “O OFF” button to enter the exit and save mode.

7.3 Operation instruction of C type controller (split, intelligent type)

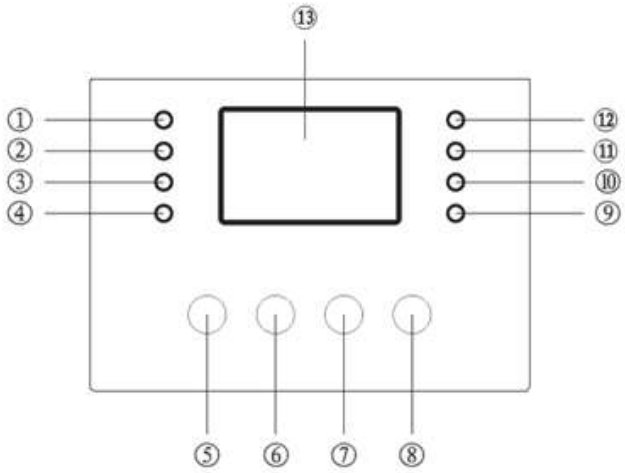

C type controller (split type)

1, 2, and 3 are Prime ABC phase indicators;

4 Prime power ON indicator

5 I circuit power-on key in the manual mode;

6 OFF key in the manual mode (this key is disable for two-segment type product);

7 Standby key in the manual mode

8 Auto / Manual switching key;

9 Standby power-on indicator;

10, 11, and 12 are standby CBA phase indicators;

13 LCD display area

TGQ1NPL Series Automatic Transfer Switch

7.3.1 Operation instruction of C type controller (split, intelligent)

- Press the “Auto/Manual” button continuously for 10 times to enter the parameters setting menu to statically display the parameter codes; press the “I key” to page down the menu, and press the “II key” to page up the menu.
- Press the “Auto/Manual” button again to enter or exit the parameters modification menu making the parameter code flash; press the “I key” to increase parameter, and press the “II key” to decrease parameter.
- When the parameters setting is completed, press the “O” button when the code is still flashing for save, or press the “Auto/Manual” button 10 times to exit; exit the program if no button is pressed within 10s automatically without saving parameters.

7.3.2 Parameter code, range, and default values of C type split controller

No.	Parameter code	Parameter name	Range	Factory default
1	u270	Prime overvoltage threshold	200 ～ 300	280
2	u165	Prime undervoltage threshold	100 ～ 200	165
3	n270	Standby overvoltage threshold	200 ～ 300	280
4	n165	Standby undervoltage threshold	100 ～ 200	165
5	┌	Return delay time	0 ～ 240	001
6	┐	Switching delay time	0 ～ 240	001
7	q	Generator start time	0 ～ 240	005
8	d	Generator stop time	0 ～ 240	005
9	P	Three-phase imbalance setting	0-90 range adjustable (0 indicates off)	030
10	E	ATSE working mode	0= Automatic transfer automatic recover 1= Automatic transfer and non-automatic recover 2=Standby priority	000
11	□	Programmable output (F/F1)	0 ～ 9	000
12	J	Machine address	1 ～ 32	001
13	b	Baud rate	1 ＝ 2400 2 ＝ 4800 3 ＝ 9600 4 ＝ 19200	003
14	H	Restore factory default	0 ~ 3 3= Restore factory default (note: 0~2 are reverse functions that are not set by user)	000

Note: Please note that the confirmation of factory defaults when H=003 will restore all factory data including prime and standby power voltage sampling coefficient. After recovery, the difference between the voltage data collected by the controller and the actual prime and standby input voltage may be about ±10V (if calibration is required, please contact the after-sales engineer).

7.3.3 Definition of split-type programmable output F/F1 of C type controller(63~630 frame):

Programmable output	Setting range (0~8)	Default output
F / F 1	0=Start generator normally-off output 1=Fire feedback output 2=Prime power abnormity output 3=Standby power abnormity output 4=Output at the auto state 5=Output at the manual state 6=Output when ATSE switching failure 7=Output at the prime ON state 8=Output at the standby ON state 9=Three-phase imbalance alarm output	000

7.4 C Type Controller Operation Description (1600 frame split type and intelligent type)

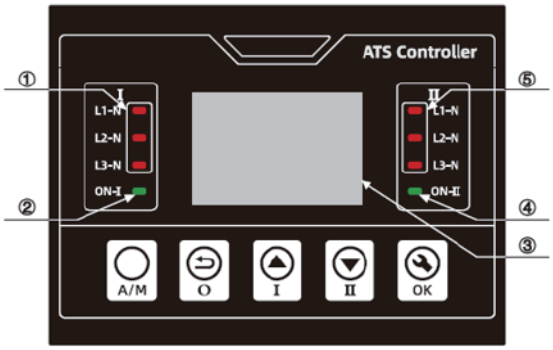

1 Common ABC phase power indicator

2 Common ON indicator

3 LCD display

A/M manual/auto key

O double-split /return key

5 Standby ABC phase power indicator

4 Standby ON indicator

I Common ON / data plus

II Standby ON / data minus

OK Set / Confirm key

7.4.1 C type Controller Parameters Setting Description (1600 frame)

- Enter the parameter setting menu: On the main menu, press “OK” key to enter the parameter blowse menu; the parameter code is displayed statically; press “I” to page down the menu, and press “I” again to page up the menu.
- Modify parameters: Locate the parameter to be modified, click “OK” key to enter the parameter modification mode; at this time parameter starts to flicker; press “I” to add parameter, and press “I” to minus parameter; after setting parameters, press “OK” key to save parameters.
- Exit setting: On the menu browse interface or parameter setting interface, click “O” key to exit the setting state and return main interface; any modified parameter not confirmed will not be saved.

TGQ1NPL Series Automatic Transfer Switch

7.4.2 Introduction on parameter code, range, and default value of C type controller split type (1600 frame)

No.	Parameter code	Parameter name	Range	Factory default
1	U1H	Common overvoltage threshold	200 ~300	270
2	U1L	Common undervoltage threshold	100 ~200	165
3	U2H	Standby overvoltage threshold	200 ~300	270
4	H2L	Standby undervoltage threshold	100 ~200	165
5	F1H	Common frequency upper limit setting	50.0 - 75.0Hz	55
6	F1L	Common frequency lower limit setting	40.0 - 60.0Hz	45
7	F2H	Standby frequency upper limit setting	50.0 - 75.0Hz	55
8	F2L	Standby frequency lower limit setting	40.0 - 60.0Hz	45
9	C1	Switched to common delay time	0 - 240	1
10	C2	Switched to stamdby delay time	0 - 240	1
11	C3	Generator start delay time	0 - 240	5
12	C4	Generator stop delay time	0 - 240	5
13	d	Generator start model setting	0: Start generator when the priority power supply works abnormally 1: Start generator when the common type is abnormal 2: Start generator when the standby type is abnormal	0
14	Lcd	Backlight brightness adjustment	0 - 10	8
15	E	ATSE working mode	0: Auto-transfer auto-recovery 1: Auto-transfer and not auto-recovery or mutually reserved 2: Standby priority	0
16	01	Programmable relay 1	0-8 (meanings see the table below)	0
17	02	Programmable relay 2		6
18	J	Communication: Local address	1 - 32	1
19	b	Communication: Baud rate	1: 2400 2: 4800 3: 9600 4: 19200	3
20	P	Phase sequence detection	0: Function OFF 1: Function On (note: An alarm is only issued without transfer for this function, and the buzzer inside works when alarm)	0
21	F	Frequency anomaly transfer	0: OFF 1: ON	0
22	H	Restore factory setting	3: Restore factory value, other values are invalid	0

Note: Please note that all original factory data will be restored when pressing OK to restore the factory default values at H=003, including the sampling factor of the common and standby power supply voltages. After recovery, this may cause the difference between the voltage data collected by the controller and the actual common and standby power input voltages is about ± 10V (if calibration is required, please contact the after-sales engineer).

7.4.3 Definition of split type programmable relay of C type controller (1600 frame):

Programmable output port	Setting range (0~8)	Default output
Output port 1 is of the normally closed type Output port 2 is of the normally open type	0= Starting generator normally closed output 1= Fire feedback output 2= Common power supply anomaly output 3= Standby power supply anomaly output 4= Output at the Auto state 5= Output at the Manual state 6 = Output when ATSE transfer failed 7 = Common closed state output 8 = Standby closed state output	Output port 1 is 0 by default Output port 2 is 6 by default

TGQ1NPL Series Automatic Transfer Switch

8 Installation and Operation

8.1 Main circuit wiring of two-segment type (II) product

8.1.1 Two-segment type 2-pole product wiring diagram

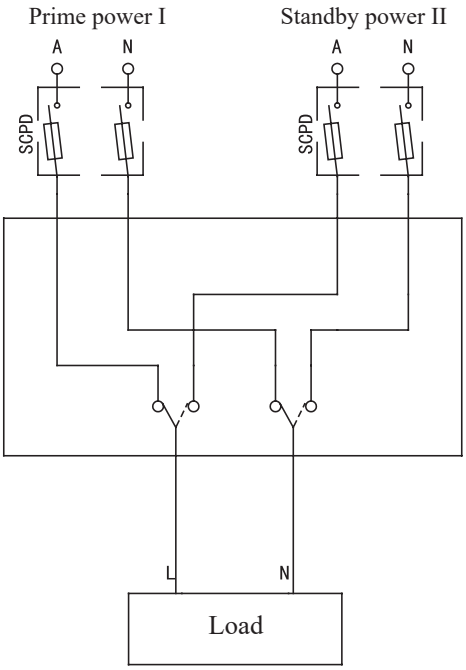

8.1.2 Two-segment type 3-pole product wiring diagram

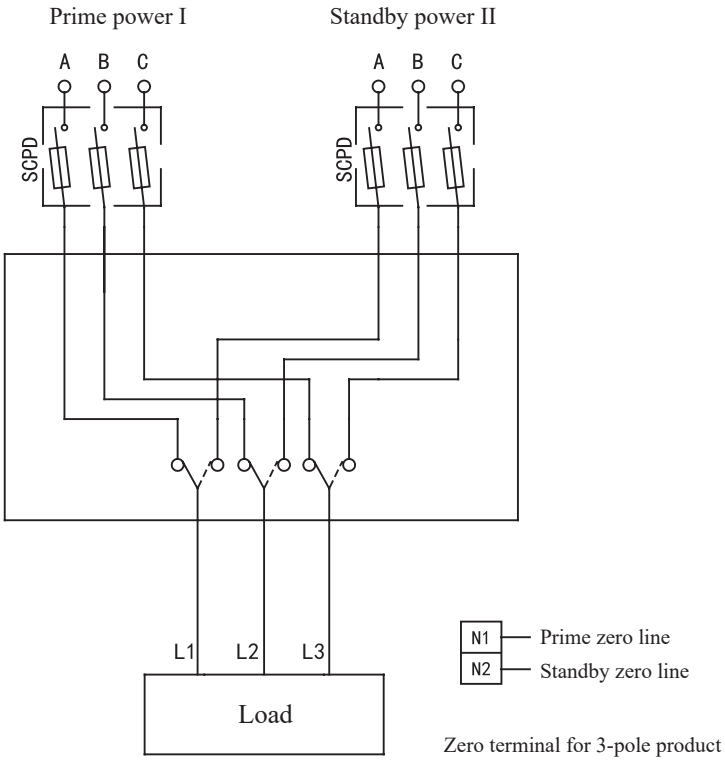

TGQ1NPL Series Automatic Transfer Switch

8.1.3 Two-segment type 4-pole product wiring diagram

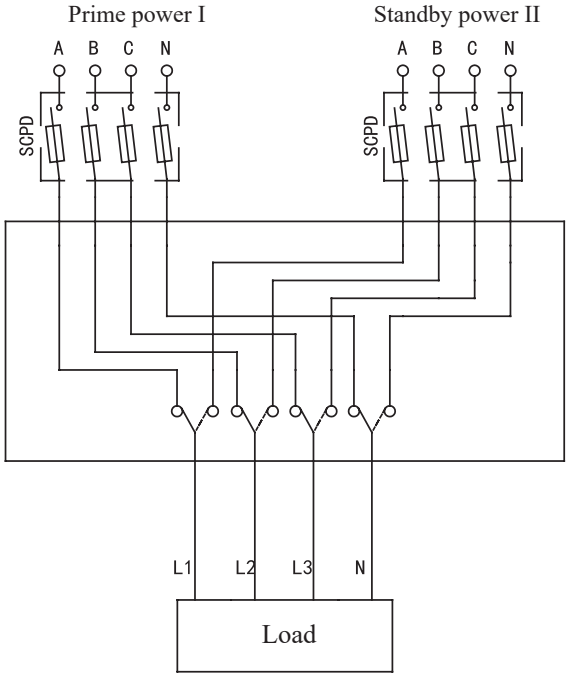

Note: The short-circuit protective device (SCPD) must be provided in the dotted box on the upper port of product when installation and operation, and the phase sequence of the prime power is consistent with that of the standby power. For 3-pole product, please connect the neutral line to the zero terminal for normal operation.

8.2 Main circuit wiring diagram of three-segment type (III) product

8.2.1 Three-segment type 2-pole product wiring diagram

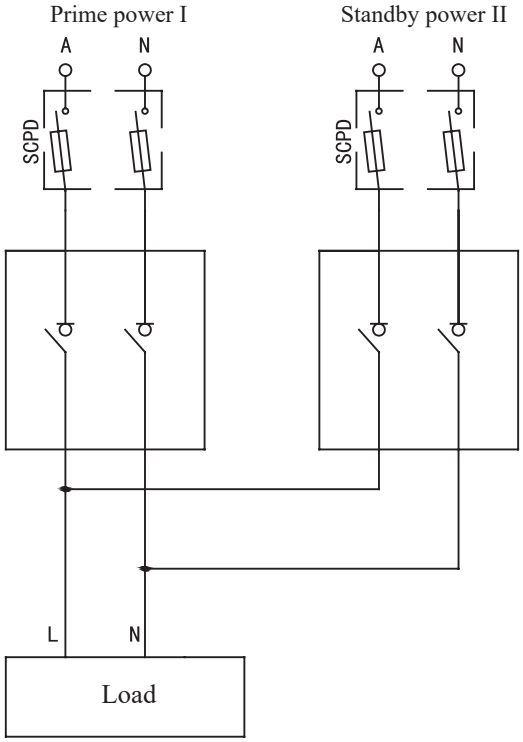

TGQ1NPL Series Automatic Transfer Switch

8.2.2 Three-segment type 3-pole product wiring diagram

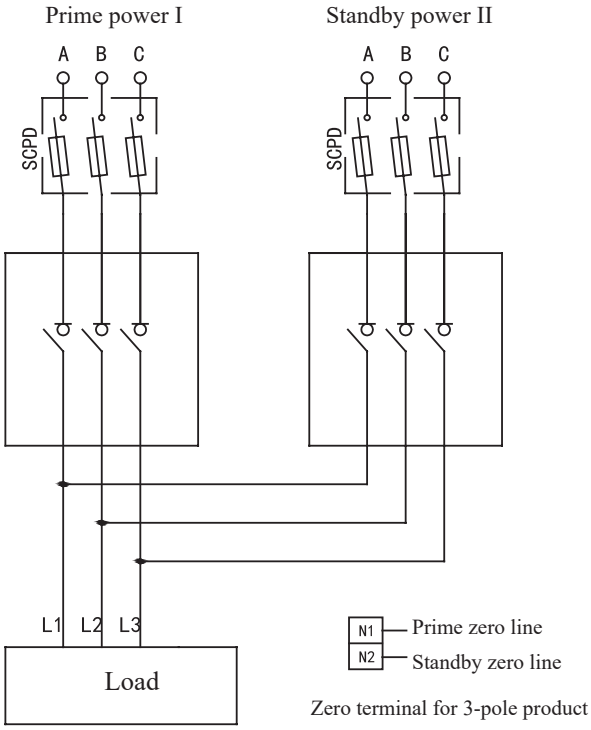

8.2.3 Three-segment type 4-pole product wiring diagram

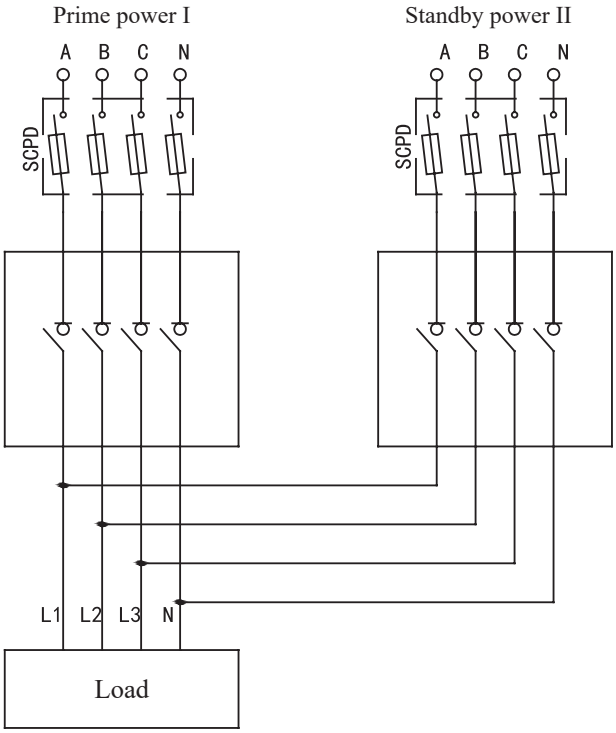

Notes:

1. The short-circuit protective device (SCPD) must be provided in the dotted box on the upper port of product when installation and operation, and the phase sequence of the Prime power is consistent with that of the standby power.
2. For 3-pole product, please connect the neutral line to the zero terminal for normal operation.

TGQ1NPL Series Automatic Transfer Switch

8.3 Wiring diagram

Note: For convenience, the following A1, B1, C1, and N1 indicate Prime (I) A, B, C, and N, respectively; A2, B2, C2, and N2 indicate Standby (II) A, B, C, and N, respectively.

8.3.1 Two-segment (integrated type) wiring diagram

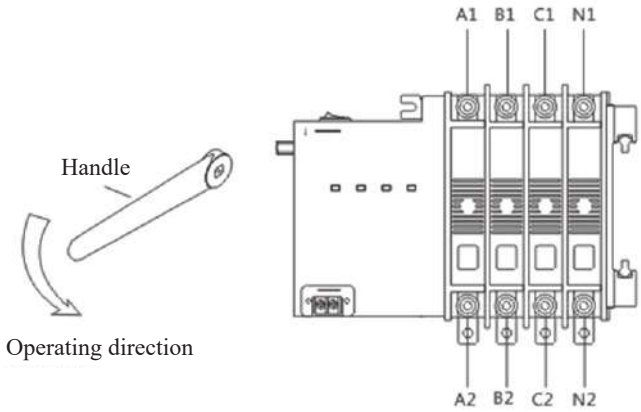

8.3.2 Two-segment (split type) wiring diagram

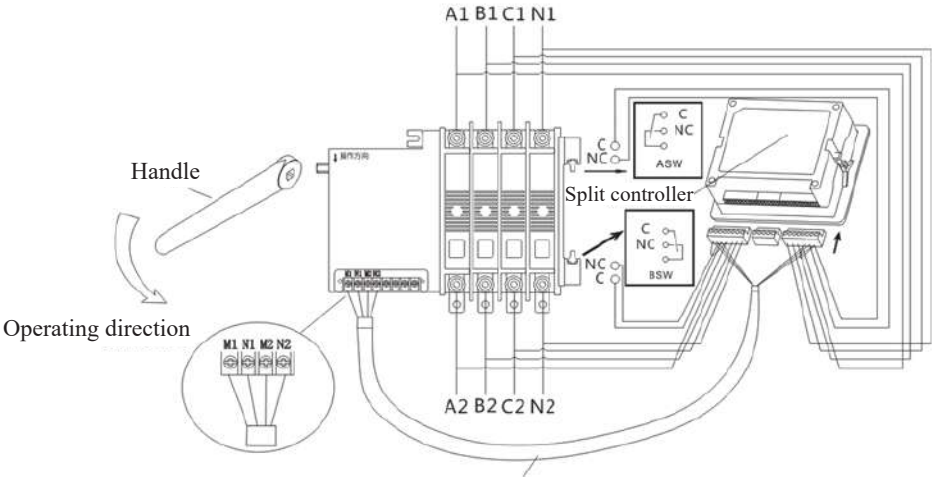

Connecting wire length 1.8 m

8.3.3 63 ~ 630 frame three-segment (integral type) wiring diagram

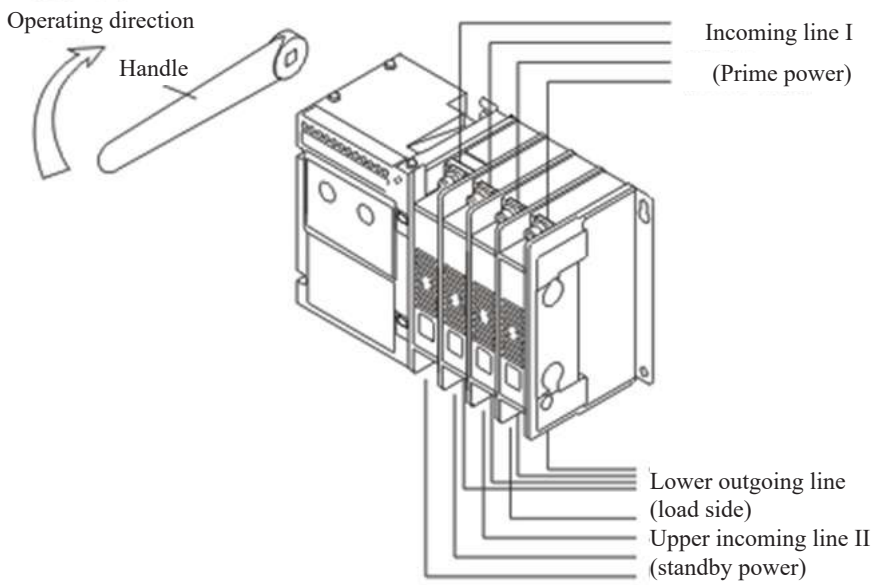

8.3.4 63 ~ 630 frame three-segment (split type) wiring diagram

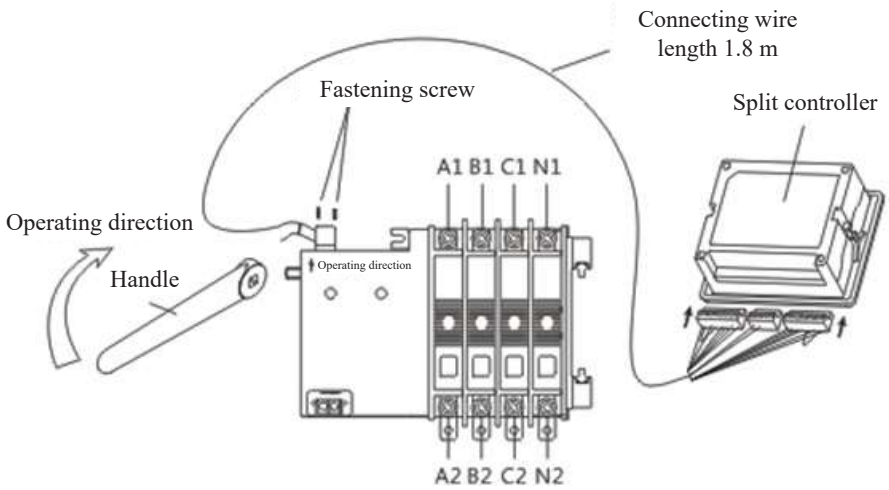

TGQ1NPL Series Automatic Transfer Switch

8.4 A type and C type product power indicator and closing indicator wiring diagram (63 ~ 630 frame)

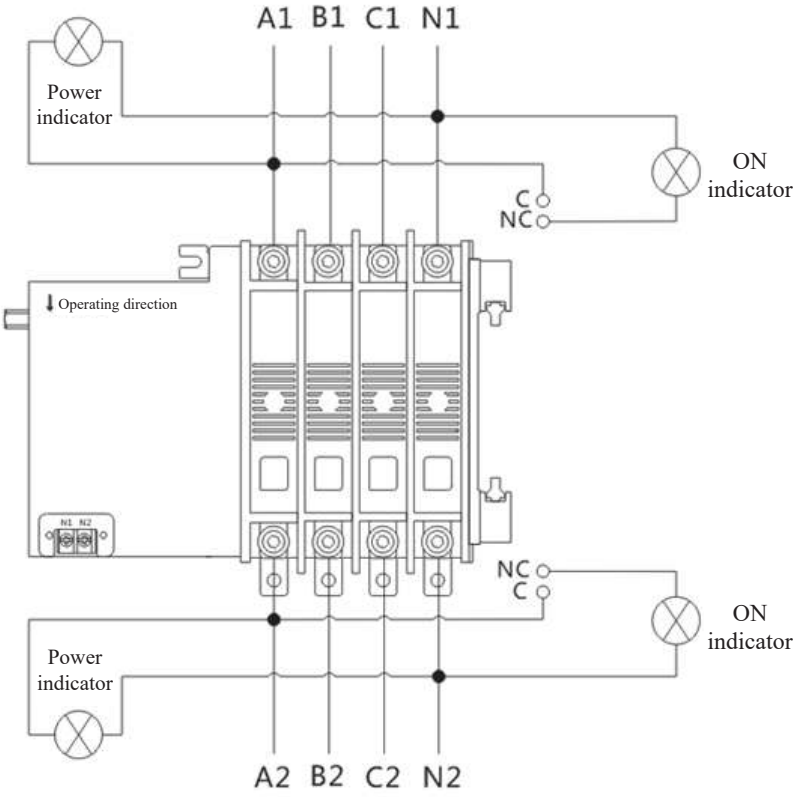

8.5 B type product wiring terminal description (63 ~ 630 frame)

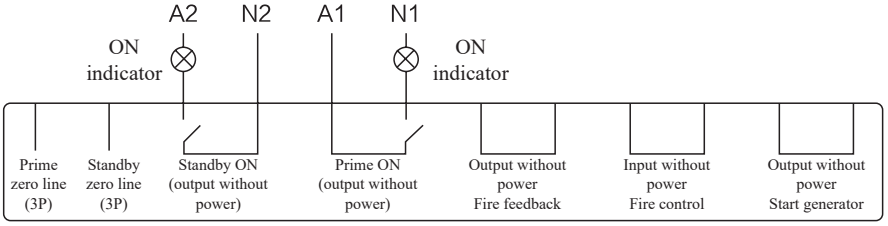

- Start generator: In the event of failure of prime power, this port will be powered on after delay.
- Fire control: With the fire port short-connected, the dual-split light is lit, and the dual power is off; with short connection removed, press the Auto/Manual key for reset (for three-segment type product).
- Fire feedback: When dual power is at the dual-OFF state, the fire feedback port is powered on (for three-segment type product).
- Prime ON: When dual power is at the prime ON state, one set of passive signals is output from this port (A1 is Phase A of prime power; N1 is Phase N of prime power).
- Standby ON: When dual power is at the standby ON state, one set of passive signals is output from this port (A2 is Phase A of standby power; N2 is Phase N of standby power).
- Prime zero line: When dual power is three-pole switch, the prime zero line is connected to this port.
- Standby zero line: When dual power is three-pole switch, the standby zero line is connected to this port.

Note: Prime zero line terminal and standby zero line terminal are only suitable for three-pole switch.

TGQ1NPL Series Automatic Transfer Switch

8.6 C type product wiring terminal description

M3	M4	L2	A2	A2	B2	C2	N2
1	2	3	4	5	6	7	8

T2	T1	F2	F1	F
9	10	11	12	13

N1	C1	B1	A1	A1	L1	M2	M1
14	15	16	17	18	19	20	21

R-	R+	GND	R1	485A (+)	485B (-)	EGND
22	23	24	25	26	27	28

- M3 M4: Standby ON auxiliary output without power.
- L2: Standby ON feedback input with power.
- A2: Standby A phase output for standby ON feedback.
- A2 B2 C2 N2: Standby power three-phase four-wire input.
- T1 T2: Dual-split signal output without power, two-segment type blank.
- F2 F1 F: F1 and F are programmable output in the controller; the output definition sees parameters setting.
- A1 B1 C1 N1: Prime power three-phase four-wire input.
- A1: Prime A phase output for prime ON feedback.
- L1: Prime ON feedback input with power.
- M2 M1: Prime ON auxiliary output without power.
- R- and R+: DC9V-36V fire input with power (for three-segment type).
- GND and R1: Short-connected, fire input without power (for three-segment type).
- 485A and 485B: RS485 communication terminal, EGND shielded earth wire.

Note: A dedicated cable is provided for product accessories, and can be plugged into the corresponding port of three-segment type; for two-segment type, No. 17-14 and 5-8 shall be wired to the corresponding port of controller from main circuit by user.

- Communication protocol parameters:
  Module address: 1 (range: 1-32, settable by user); baud rate: 9600bps. Note: Communication protocol shall be documented.

8.7 C type controller (split type) wiring diagram

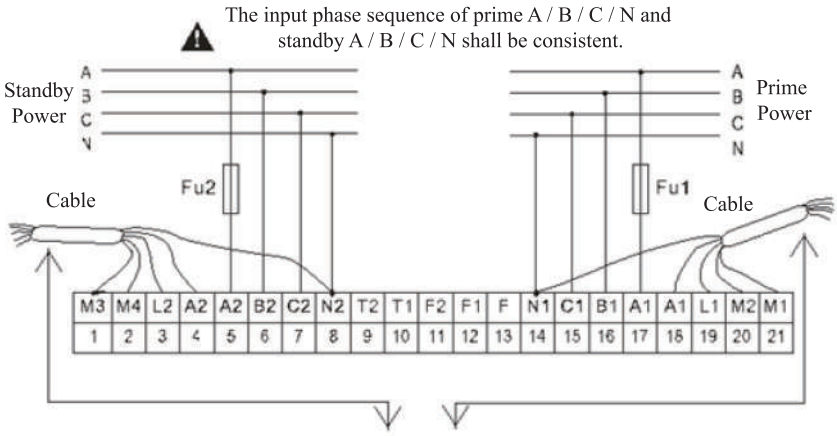

- A dedicated cable is provided as accessory when delivery. The user is required to connect the corresponding wires of the body and controller.
- Dedicated interfaces are provided at the three-segment (split type) body side, and inserted into the corresponding port and locked with screws; the corresponding inserts at the controller side are plugged into those interfaces, respectively. For details, refer to (three-segment (split type) wiring diagram). Other ports see 8.7 Wiring Instruction.
- For two-segment (split type), No. 17, 16, 15, 14 and 5, 6, 7, and 8 are connected to the ABCN of prime power and standby power of main circuit for normal operation of controller.
- FU1 and FU2 are 10A fuses.

TGQ1NPL Series Automatic Transfer Switch

8.8 C type Controller (Split Type) Wiring Diagram (1600 Frame)

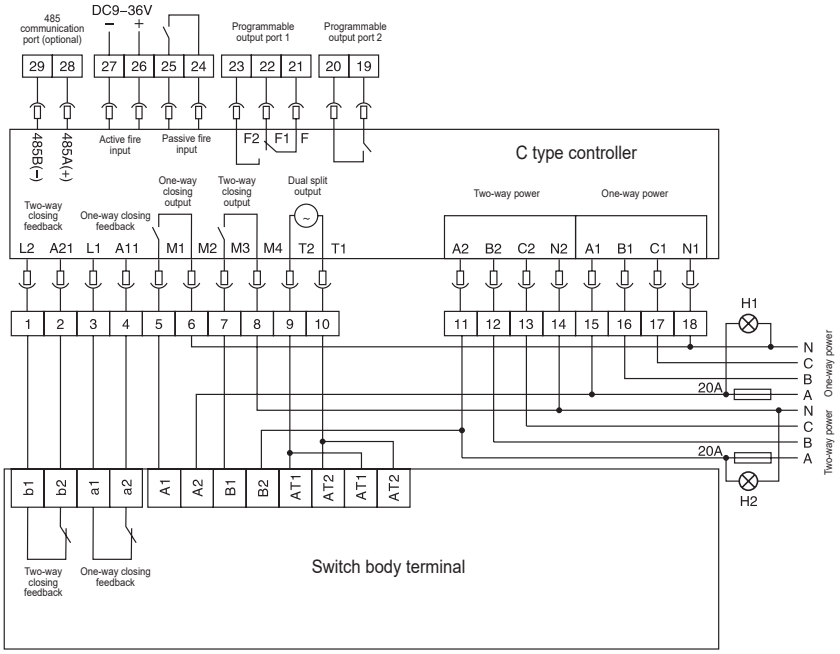

1-2 Standby closing signal feedback input

3-4 Common closing signal feedback input

5-6 Common closing output

7-8 Standby closing output

9-10 Dual split output

11-14 Standby power ABCN input

H1 Common closing indicator

15-18 Common power ABCN input

19-20 Programmable relay 2 (see programmable relay table)

21-23 Programmable relay 1 (start generator by default)

24-25 Passive fire signal input

26-27 DC9-~36V fire signal input

28-29 485 communication interface

H2 Standby closing indicator

8.9 External indicator of body (1600 frame)

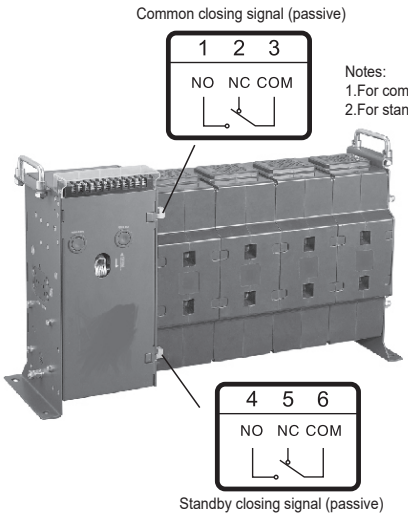

Notes:
1.For common closing, 1 (NO) and 3 (COM) are connected;
2.For standby closing, 4 (NO) and 6 (COM) are connected

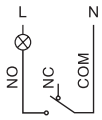

Passive signal light wiring diagram

TGQ1NPL Series Automatic Transfer Switch

9 Outline and Installation Dimensions

9.1 63A outline and installation dimensions

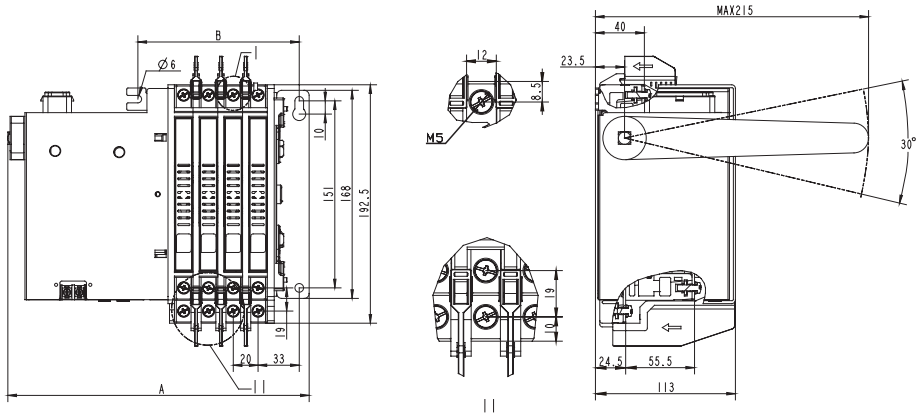

Frame current (A)	Number of poles	A	B
63	2P	205	91
	3P	225	111
	4P	245	131

Note: Unit: mm; panel safety distance: 30mm (400V), 60mm (690V).

Warning: The operating handle is available only in the manual mode, and must be removed after operation.

9.2 125A and 250A outline and installation dimensions

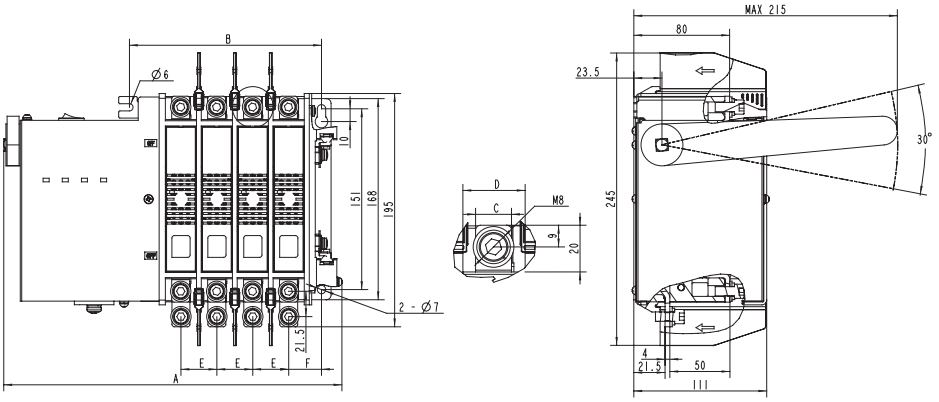

Frame current (A)	Number of poles	A	B	C	D	E	F
125	2P	223	100	15	30	26	27.5
	3P	253	130				
	4P	283	160				
250	2P	231	111	20	35	31	30
	3P	266	146				
	4P	301	181				

Note: Unit: mm; panel safety distance: 30mm (400V), 60mm (690V).

Warning: The operating handle is available only in the manual mode, and must be removed after operation.

TGQ1NPL Series Automatic Transfer Switch

9.3 630A outline and installation dimensions

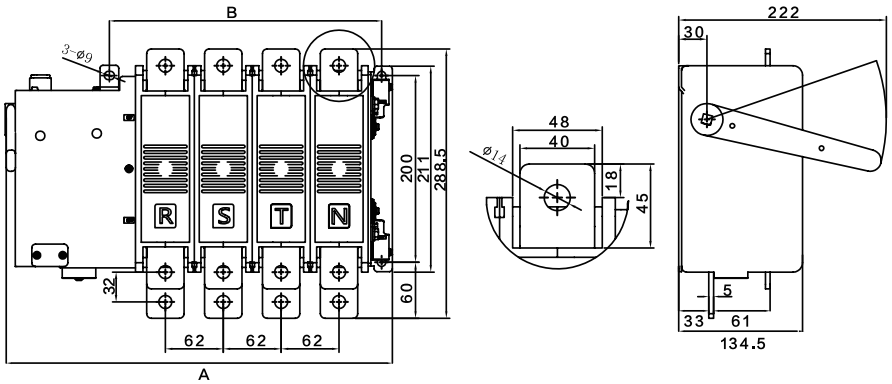

Frame current (A)	Number of poles	A	B
630	2P	295	168
	3P	359	230
	4P	419	292

Note: Unit: mm; panel safety distance: 30mm (400V), 60mm (690V).

Warning: The operating handle is available only in the manual mode, and must be removed after operation.

9.4 TGQ1NPL-1600 Outline and Installation Dimensions

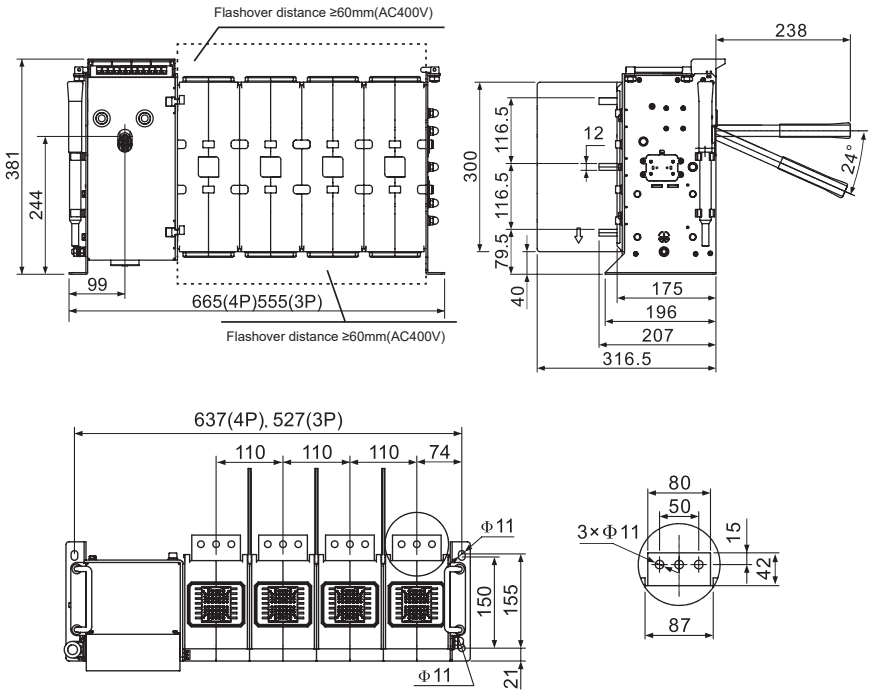

Note: Unit: mm; panel safety distance: 60mm (400V)
Warning: The operating handle is operated only in the manual mode or in the event of power outage, and is removed after the operation is completed.

TGQ1NPL Series Automatic Transfer Switch

9.5 C Type Controller (Split Type) Outline Dimensions and Hole Size

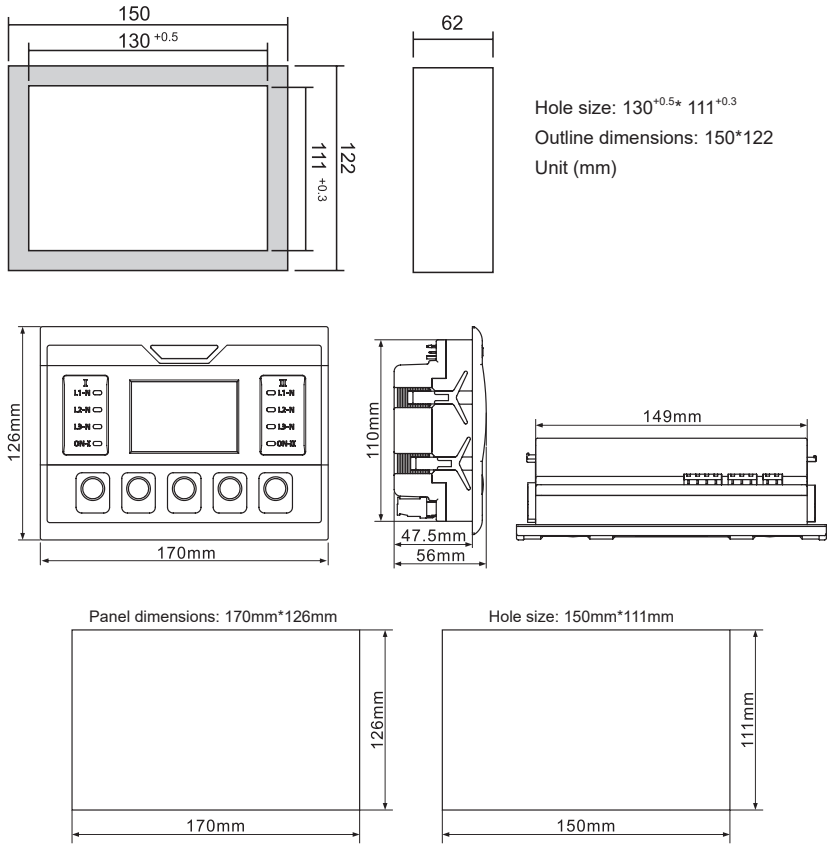

TGQ1NPL–1600

10 Ordering Notice

Please specify the following items when ordering:

10.1 Please specify the product model, current specification, and number of poles when ordering.

10.2 For any special installation conditions or special working site, the corresponding technical information shall be provided by user or contact our company for this.

Example: To order automatic transfer Switch, Frame current 125A, three-segment type, 4-pole integrated type, standard controller, rated current 100A, 50 pcs.

Please specify: TGQ1NPL-125III/4YB 100A 50 pcs.

GL Load-break Switch

1 Overview

GL series load break switches is suitable for the AC 50Hz product with rated AC voltage up to 690V and with rated current up to 3150A; It can be used for infrequent manual connection and disconnection of circuit and for infrequent power isolation.

2 Type Designation

GL □ – □ / □ □ □ □ □ □

- "T" means transparent housing, suitable for operation at front center
- "F" means the wiring terminal with a protective cover, suitable for operation at front center; default if not required
- Aux. code: Default if not required
  - "11" means 1NO+1NC
  - "22" means 2NO+2NC
- "K" means with indicator; default without indicator
- "J" means operation outside the cabinet; default operation inside the cabinet
- Number of poles: 3, 4
- Rated current (A)
- Additional code: Default operation at front
  - "C": Operation at the side
  - "Z": Up-down conversion operation
  - "Z2": Left-right conversion operation
- Load break switch (GL63~100, GL-800~3150 are switch disconnectors)

Note: 160~630A for transparent model; no aux. contact is required for transparent type product.

One normally open and one normally closed	11	1NO+1NC
Two normally open and two normally closed	22	2NO+2NC

3 Technical Parameters

Table 1

Resistive current Ith (A)	100		160	250	400	630	800	1600			3150		
Rated insulation voltage Ui(V)	800						1000						
Rated working voltage Ue(V)	415/690(GLZ:380V)				415/690			415/690					
Rated impulse withstand voltage Uimp (kV)	8(GLZ:6)				12			12					
Rated operating current Ie (A)	63	100	125/160	200/250	315/400	425/630	630/800	800/1000	1250	1600	2000	2500	3150
Usage category	AC23B (GLZ:AC-21B)		AC-21B				AC-22B						
Rated short time withstand current (kA/s)	2	2	6(GLZ:4)	9(GLZ:5)	20	20	20	30	30	30	50	50	50
Raed short circuit making capacity Icm (kA/Peak)	3(GLZ:2.84)		9.2(GLZ:5.88)	15.3(GLZ:7.65)	40	40	40	63	63	63	105	105	105
Mechanical life (times)	12000		12000		12000		4000				2500		
Electrical life (times)	1000		1000		1000		500				200		

4 Operating Conditions

4.1 Ambient air temperature: -5℃ ~ +40℃;
4.2 Installation altitude: ≤2,000 meters;
4.3 Humidity: The maximum temperature is 40℃, and the relative air humidity does not exceed 50%. A higher relative humidity is allowed at a lower temperature, such as up to 90% at 20℃. Special measures shall be taken for condensation occurred occasionally due to temperature changes;
4.4 Pollution degree: 3;
4.5 The switch shall be vertically installed in places where there is no obvious shaking, impact vibration or rain and snow erosion and no explosive and hazardous medium, and there is no enough gas and dust to cause metal corrosion and insulation damage in medium.

GL Load-break Switch

5 Installation Method

The installation method is shown in figure below. An extended shaft is required for operation outside the cabinet, and it is required that the handle (shaft) installed on the panel (door) is coaxial (aligned) with the long shaft, otherwise the cabinet door is not easily closed and is operated difficultly resulting in damage to the operating mechanism. The length of shaft can be determined according to the installation distance from the product to the door panel and the length (about 30mm) of the shaft inserted into the handle.

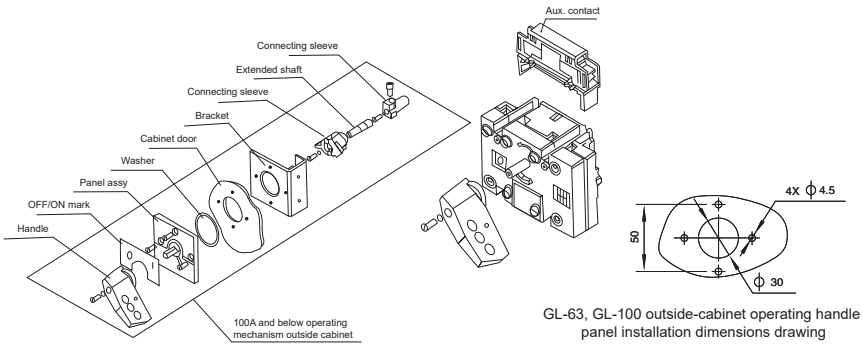

GL-63, GL-100 outside-cabinet operating handle panel installation dimensions drawing

The length of standard shaft outside cabinet for GL-63 and GL-100 is 200mm

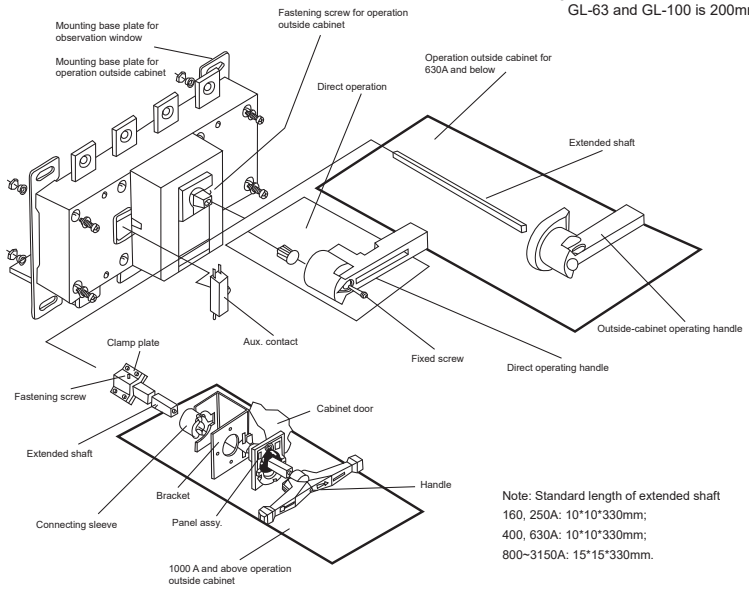

Note: Standard length of extended shaft
160, 250A: 10*10*330mm;
400, 630A: 10*10*330mm;
800~3150A: 15*15*330mm.

Diagram of handle inside cabinet

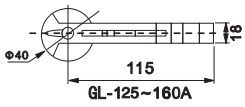

GL-125~160A

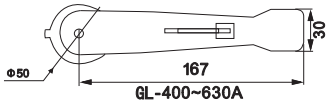

GL-400~630A

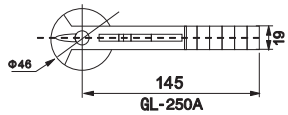

GL-250A

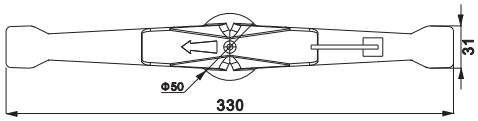

GL -1000~3150A

Diagram of handle outside cabinet

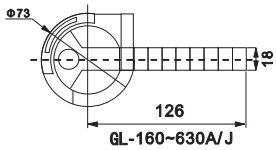

GL-160~630A/J

GL Load-break Switch

6 Outline and Installation Dimensions

6.1 Outline and installation dimensions of GL-63 load break switches

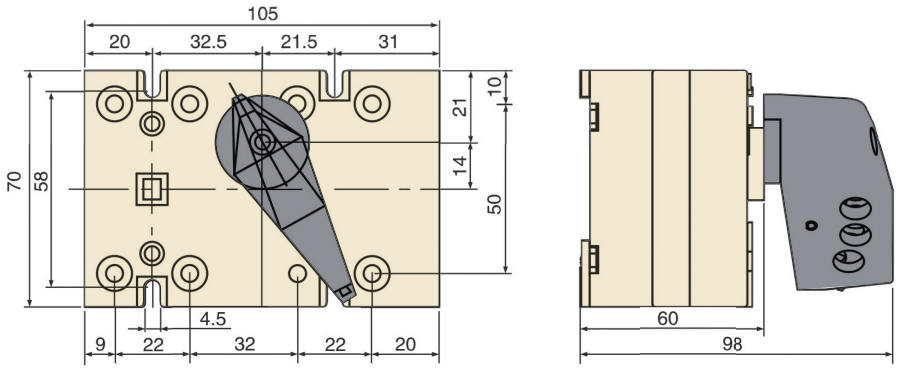

6.2 Outline and installation dimensions of GL-100 load break switches

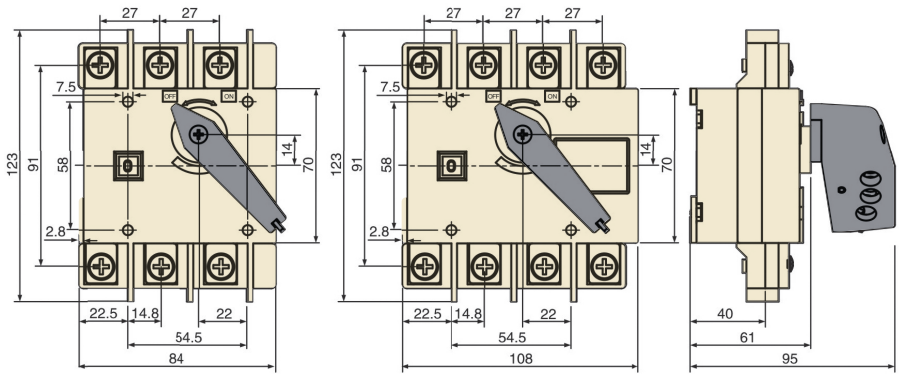

6.3 Outline and installation dimensions of GL-125~630 load break switches

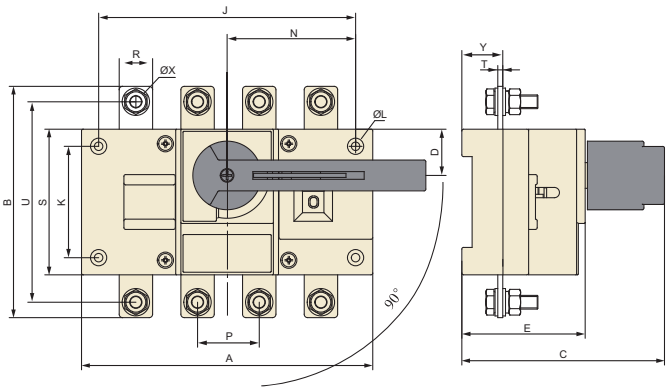

GL-125~630 Direct operation

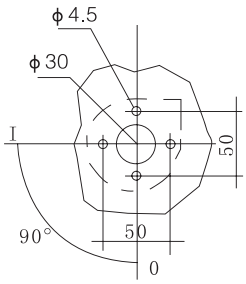

Installation dimension diagram of GL-125~630 operating handle panel outside the cabinet

GL Load-break Switch

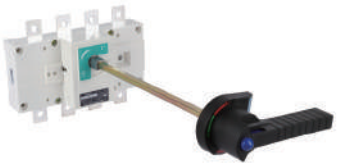

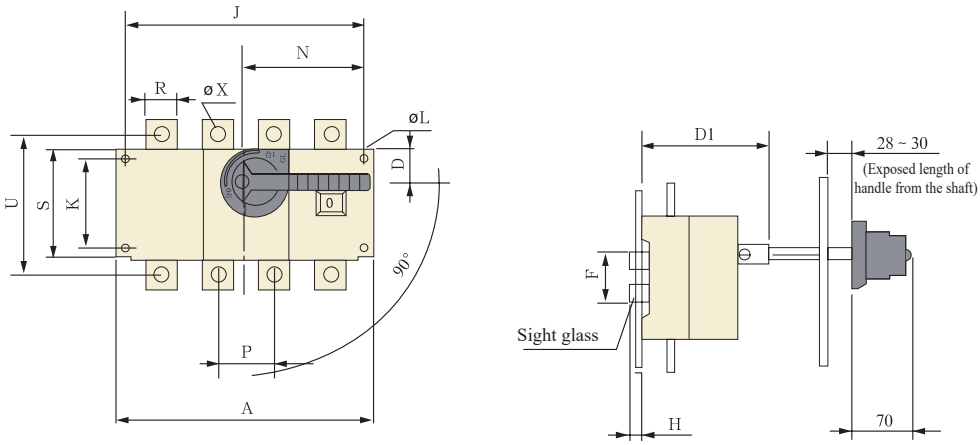

GL-125~630/JK Operation Outside Cabinet

Spec.	Outline dimensions and installation dimensions (mm)																		
Current	A	B	C	D	D1	E	φL	J	K	N	P	R	S	T	U	φX	Y	F	H
125,160/3	140	135	125	27	92	73	5.5	120	65	75	36	20	85	3	117	9	24	50	10
125,160/4	170	135	125	27	92	73	5.5	150	65	75	36	20	85	3	117	9	24	50	10
200,250/3	180	170	138	35	98	86	5.5	160	90	105	50	25	110	3	140	11	26	79	15
200,250/4	230	170	138	35	98	86	5.5	210	90	105	50	25	110	3	140	11	26	79	15
400/3	230	240	185	50	135	110	7	210	140	135	65	32	160	4.5	206	11	37	95	20
400/4	290	240	185	50	135	110	7	270	140	135	65	32	160	4.5	206	11	37	95	20
630/3	230	260	185	50	135	110	7	210	140	135	65	40	160	5	220	13	37	95	20
630/4	290	260	185	50	135	110	7	270	140	135	65	40	160	5	220	13	37	95	20

6.4 Outline and installation dimensions of GL-800 switch disconnector

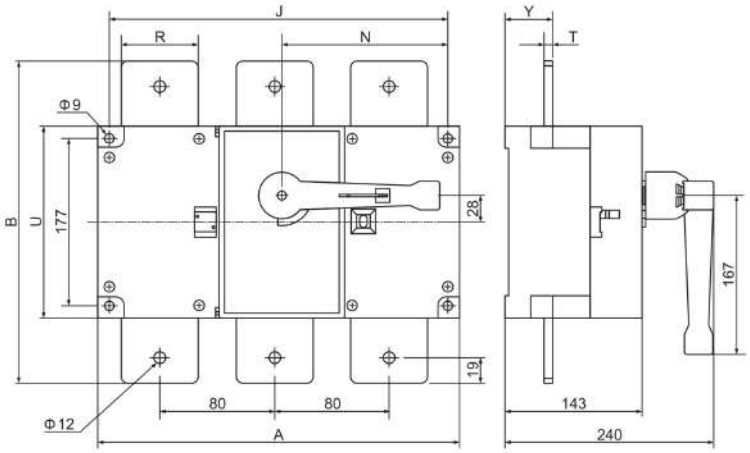

GL-800 direct operation

GL Load-break Switch

6.5 Outline and installation dimensions of GL-1000~3150 load break switches

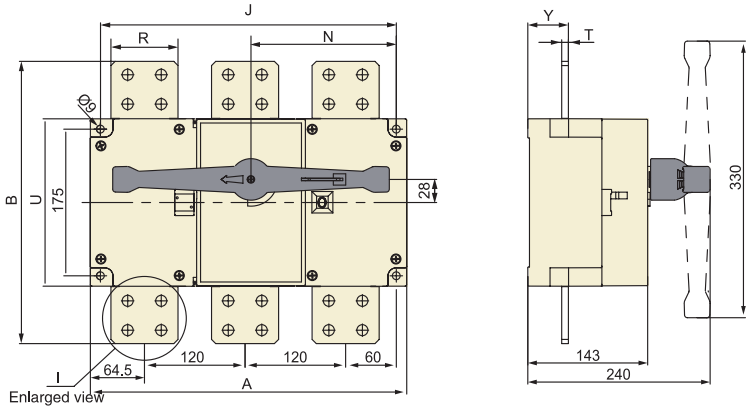

GL-1600A direct operation

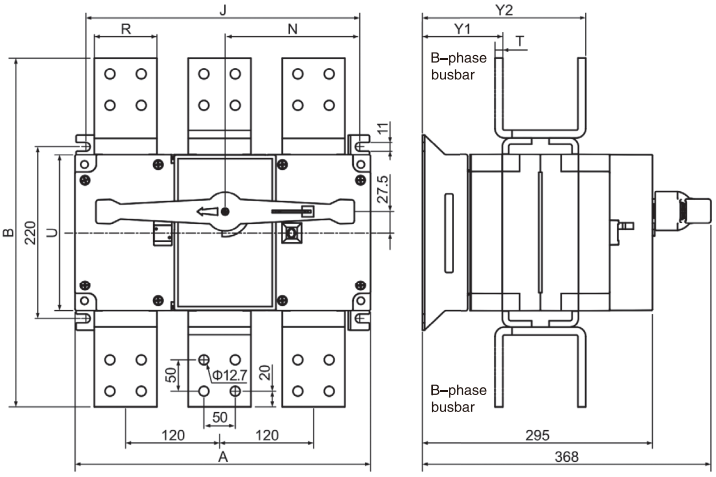

GL-3150A direct operation

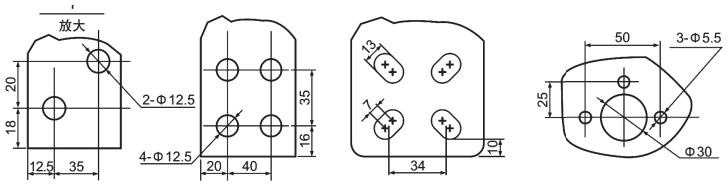

1000A 1250A ~ 1600A 2000A ~ 2500A Installation dimensions of handle base outside cabinet

GL Load-break Switch

Spec.	Outline dimensions and installation dimensions (mm)								
Current	A	B	J	N	R	T	U	Y(Y1,Y2)	
800/3	280	286	255	102	50	6	200	47	
1000/3	378	310	353	174	60	8	200	48	
1000/4	498	310	471	235	60	8	200	48	
1250/3	378	336	353	174	80	8	200	48	
1250/4	498	336	471	235	80	8	200	48	
1600/3	378	336	353	174	80	10	200	49	
1600/4	498	336	471	235	80	10	200	49	
2000/3	378	445	353	174	80	10	200	108	196
2000/4	498	447	471	235	80	10	200	108	196
2500/3	378	445	353	174	80	10	200	108	196
2500/4	498	447	471	235	80	10	200	108	196
3150/3	378	492	353	174	120	12	200	95	207
3150/4	498	494	471	235	120	12	200	95	207
3150/3 customized	378	492	353	174	120	15	200	98	210
3150/4 customized	498	494	471	235	120	15	200	98	210

GL Load-break Switch

6.6 Outline and installation dimensions of GLC-160~630 load break switches with side operation

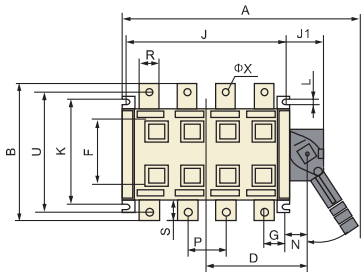

GLC-160A direct operaiton

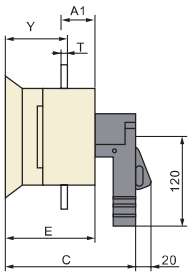

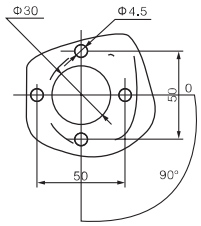

Installation dimensions of handle seat outside the cabinet

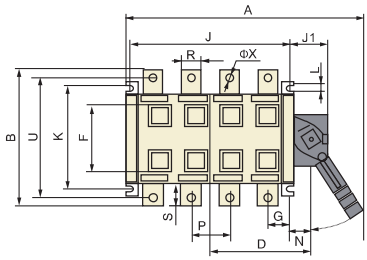

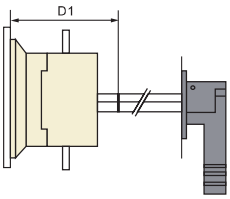

GLC-160A~630A/K operation outside cabinet

Spec.	Outline dimensions and installation dimensions (mm)																		
Current	A	B	C	D	D1	E	J	J1	K	N	P	R	T	U	φX	Y	L	F	S
125/3	267	135	147	89	125	88	120	65	95	29	36	20	3	115	9	25	7	50	25
125/4	297	135	147	104	125	88	150	65	95	29	36	20	3	115	9	25	7	50	25
160/3	267	135	147	89	125	88	120	65	95	29	36	20	3	115	9	25	7	50	25
160/4	297	135	147	104	125	88	150	65	95	29	36	20	3	115	9	25	7	50	25
200/3	308	170	167	110	134	98	160	65	116	30	50	25	3	140	11	25	9	79	30
200/4	358	170	167	135	134	98	210	65	116	30	50	25	3	140	11	25	9	79	30
250/3	308	170	167	110	134	98	160	65	116	30	50	25	3	140	11	25	9	79	30
250/4	358	170	167	135	134	98	210	65	116	30	50	25	3	140	11	25	9	79	30
400/3	420	240	208	150	166	129	210	77	179	45	65	32	4.5	206	11	37	11	95	40
400/4	490	240	208	180	166	129	270	77	179	45	65	32	4.5	206	11	37	11	95	40
630/3	420	260	208	150	166	129	210	77	179	45	65	40	5	220	13	37	11	94	50
630/4	490	260	208	180	166	129	270	77	179	45	65	40	5	220	13	37	11	94	50

GL Load-break Switch

6.7 Outline and installation dimensions of GLC-1000~1600 load break switches with side operation

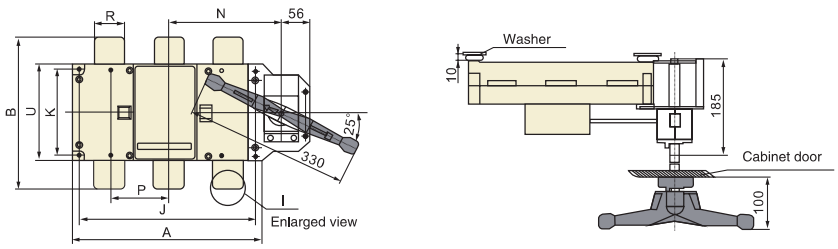

GLC-1600A/3J operaiton outside the cabinet

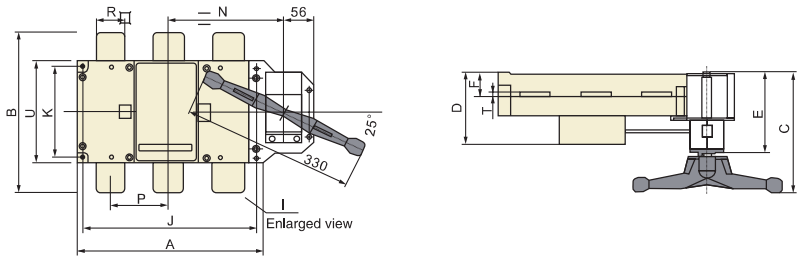

GLC-1600A/3 direct operaiton

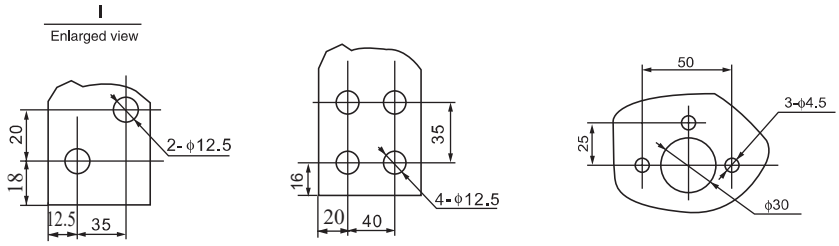

1000A

1250A-1600A

Installation dimensions of handle seat outside the cabinet

Spec.	Outline dimensions and installation dimensions (mm)												
Current	A	B	C	D	E	F	J	K	N	P	R	U	T
1000/3	378	310	249	140.5	179	48	353	175	241.5	120	60	200	8
1000/4	498	310	249	140.5	179	48	473	175	301.5	120	60	200	8
1250/3	378	336	249	140.5	179	48	353	175	241.5	120	80	200	8
1250/4	498	336	249	140.5	179	48	473	175	301.5	120	80	200	8
1600/3	378	336	249	140.5	179	48	353	175	241.5	120	80	200	10
1600/4	498	336	249	140.5	179	48	473	175	301.5	120	80	200	10

GL Load-break Switch

6.8 Outline and installation dimensions of GLZ up-down conversion load break switches

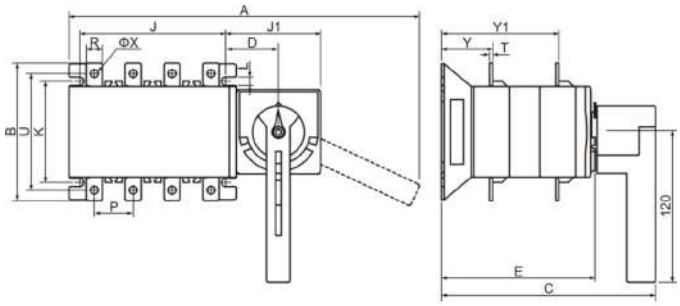

GLZ-100A~1600A direct operation

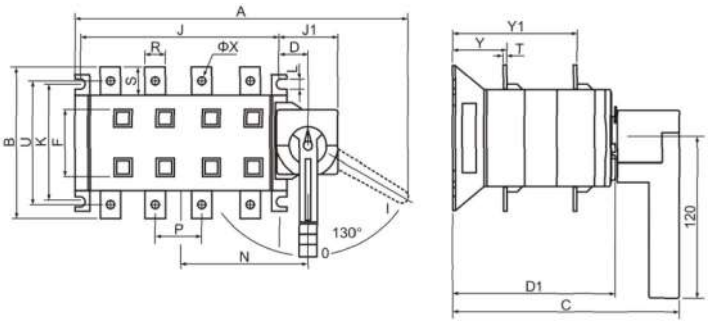

GLZ-100A~1600A operaiton outside the cabinet

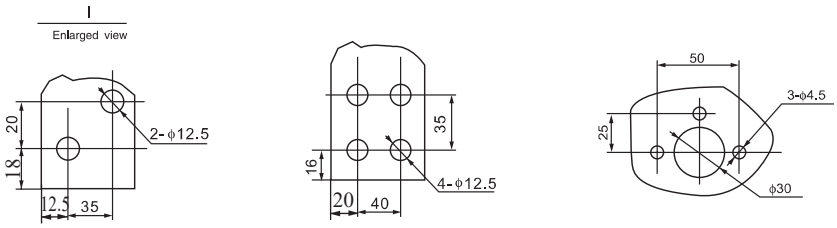

1000A　　1250A-1600A　　Installation dimensions of handle seat outside the cabinet

Spec.	Outline dimensions and installation dimensions (mm)																
Current	A	B	C	D	D1	E	J	J1	K	L	P	R	T	U	φX	Y	Y1
GLZ-100/3	247	110	170	39	149	120	115	75	85	7	30	14	2. 5	90	6	41	92
GLZ-100/4	277	110	170	39	149	120	115	75	85	7	30	14	2. 5	90	6	41	92
125~160/3	267	135	212	29	189	165	120	65	95	7	36	20	3	115	9	55	121
125~160/4	297	135	212	29	189	165	150	65	95	7	36	20	3	115	9	55	121
200~250/3	308	170	249	30	215	182	160	65	116	9	50	25	3	140	11	64	146
200~250/4	358	170	249	30	215	182	210	65	116	9	50	25	3	140	11	64	146
400/3	420	240	318	45	272	241	210	77	179	11	65	32	4.5	206	11	83	193
400/4	490	240	318	45	272	241	270	77	179	11	65	32	4.5	206	11	83	193
630/3	420	240	318	45	272	241	210	77	179	11	65	40	5	220	13	83	193
630/4	490	240	318	45	272	241	270	77	179	11	65	40	5	220	13	83	193
1000/3	578	312	392	52.5	340	309	353	108.5	220	11	120	60	8	235	13	107	251.5
1000/4	698	312	392	52.5	340	309	473	108.5	220	11	120	60	8	235	13	107	251.5
1250/3	578	338	392	52.5	340	309	353	108.5	220	11	120	80	8	235	13	107	251.5
1250/4	698	338	392	52.5	340	309	473	108.5	220	11	120	80	8	235	13	107	251.5
1600/3	578	338	392	52.5	340	309	353	108.5	220	11	120	80	10	235	13	108	251.5
1600/4	698	338	392	52.5	340	309	473	108.5	220	11	120	80	10	235	13	108	251.5

GL Load-break Switch

6.9 GLZ-2000~3150 outline and installation dimensions

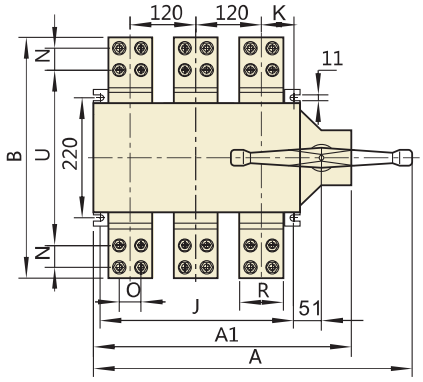

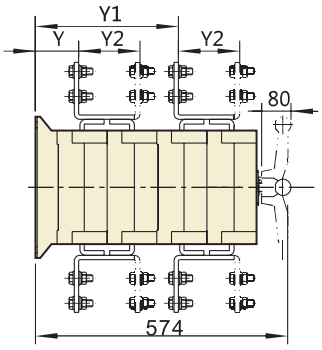

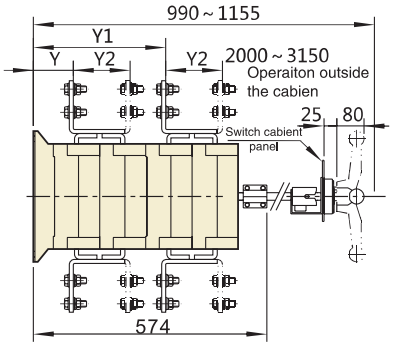

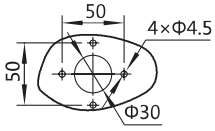

Installation dimension diagram of operating handle panel outside the cabinet

Spec.	Outline dimensions and installation dimensions (mm)											
Current	A	A1	B	K	R	J	U	O	N	Y	Y1	Y2
2000A/3	582	450	445	53.5	80	353	325	40	40	102	341	105
2500A/3	582	450	445	53.5	80	353	325	40	40	102	341	105
3150A/3	582	450	492	53.5	120	353	350	50	50	76	315	105
2000A/4	697	565	447	50.5	80	471	325	40	40	103	342	105
2500A/4	697	565	447	50.5	80	471	325	40	40	103	342	105
3150A/4	697	565	494	50.5	120	471	350	50	50	76	315	105

GL Load-break Switch

6.10 Outline and installation dimensions of GLZ2-160~1600 left-right conversion load break switches

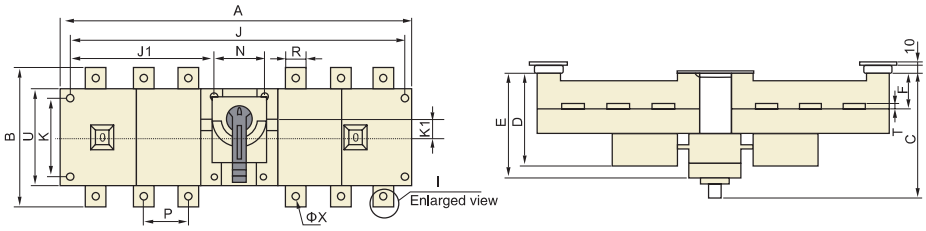

GLZ-160A~1600A direct operation

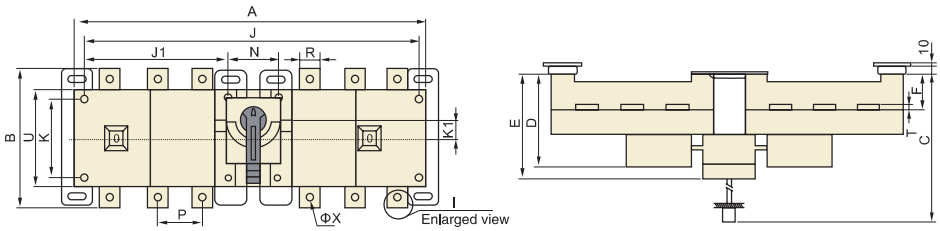

GLZ-160A~1600A operaiton outside the cabinet

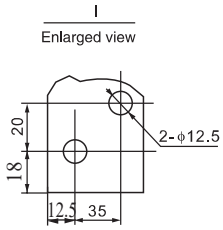

1000A

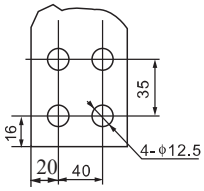

1250A-1600A

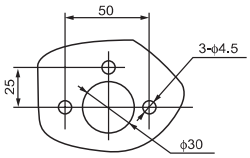

Installation dimensions of handle seat outside the cabinet

Spec.	Outline dimensions and installation dimensions (mm)																		
Current	A	B	C	D	E	F	J	J1	K	K1	M	N	P	Q	R	U	φX	T	W
125~160/3	319	135	125	67	89	24	299	120	6.5	16	5. 5	59	36	218	20	85	9	3	190
125~160/4	379	135	125	67	89	24	359	150	6.5	16	5. 5	59	36	218	20	85	9	3	190
200~250/3	405	170	134	79	104	25	385	160	90	20	5. 5	65	50	218	25	110	11	3	190
200~250/4	505	170	134	79	104	25	485	210	90	20	5. 5	65	50	218	25	110	11	3	190
400/3	535	240	166	108	131	37	515	210	140	30	6. 5	95	65	270	32	160	11	4.5	240
400/4	655	240	166	108	131	37	635	270	140	30	6. 5	95	65	270	32	160	11	4.5	240
630/3	535	240	166	108	131	37. 5	515	210	140	30	6. 5	95	65	270	40	160	13	5	240
630/4	655	240	166	108	131	37. 5	635	270	140	30	6. 5	95	65	270	40	160	13	5	240
1000/3	836	312	179	141	163	48	811	353	175	27	8. 5	105	120	311	60	200	13	8	280
1000/4	1076	312	179	141	163	48	1051	473	175	27	8. 5	105	120	311	60	200	13	8	280
1250/3	836	338	179	141	163	48	811	353	175	27	8. 5	105	120	311	80	200	13	8	280
1250/4	1076	338	179	141	163	48	1051	473	175	27	8. 5	105	120	311	80	200	13	8	280
1600/3	836	338	179	141	163	48	811	353	175	27	8. 5	105	120	311	80	200	13	10	280
1600/4	1076	338	179	141	163	48	1051	473	175	27	8. 5	105	120	311	80	200	13	10	280

GL Load-break Switch

7 Ordering Notice

The ordering unit must specify the model, features, voltage grade, current grade, number of poles, operation mode and quantity of break switches. For special ordering requirements, please contact our company's technical department.

For example: GL-200/3J 200A 10 pcs.

GL Series Switch Disconnector (YUN 3.0 Series)

1 Overview

GL series switch disconnector is suitable for AC power systems, and is primarily installed in low-voltage distribution circuits for infrequent connection and disconnection of main circuit and for isolation and disconnection of lines, suitable for energy storage, electric power, and construction industries. The product is used in the power lines with the rated voltage up to AC690V (50Hz) and with the resistive current up to 800A.
This product complies with IEC 60947-3 standard.

2 Type Designation

GL – □ / □ □ □ □ X

- "X": Yun series(not include frame1600A and 3150A)
- "F": Terminal block with a protective cover; by default: No
- Aux. code: By default: No
  "11" means one normally open and one normally closed aux.
  "22" means two normally open and two normally closed aux.
- "J" means operation outside cabinet; by default: operation inside cabinet
- Number of poles: 3, 4
- Rated operating current (A)
- Switch disconnector

One normally open and one normally closed	11	1NO+1NC
Two normally open and two normally closed	22	2NO+2NC

3 Technical Parameters

Resistive current Ith		100	160	250	400	800	800 (Large volume)	1600	3150
Rated operating current Ie (A)		100	125 160	200 250	400	630 800	630 800	1000 1250 1600	2000 2500 3150
Rated insulation voltage Ui (V)		1000							
Rated operating voltage Ue (V)		AC415/690							
Rated impulse withstand voltage Uimp (kV)		8	12						
Rated short time withstand current Icw (kA/s)		2	7	9	20	20	20	30	30
Use category		AC-23B	AC-23A(AC415V), AC-22A(AC690V)				AC-22B		
Making and breaking capacity	ON	10Ie/3Ie					3Ie		
	OFF	8Ie/3Ie					3Ie		
Service life (times)	Mechanical life	2000	8000	8000	5000	3000	500	500	300
	Electrical life	300	1000	1000	1000	500	100	100	100

GL Series Switch Disconnector (YUN 3.0 Series)

4 Operating Conditions

4.1 Ambient air temperature

The upper limit of ambient air temperature does not exceed +40℃, and the mean temperature does not exceed +35℃ within 24 hours. The lower limit of ambient air temperature is not below -5℃.

4.2 Altitude

The altitude at the installation site does not exceed 2000m.

4.3 Atmospheric conditions

4.3.1 The relative humidity of the atmosphere at the installation site does not exceed 50% at a maximum temperature of +40℃. A high relative humidity may be allowed at lower temperatures, such as 90% at 20℃. Special measures should be taken for condensation occurred occasionally due to temperature changes.

4.3.2 Pollution degree: 3.

4.3.3 Protection grade: IP20.

4.4 Installation category: III; There is no significant shaking, shock vibration, or rain and snow intrusion at the installation site; furthermore, there is no explosion hazard medium and there is no gas or dust sufficient to cause metal corrosion and damage to the insulation in the medium at the installation site.

4.5 The product shall be installed vertically, and the position indicated by the indicator end of the handle should be consistent with the product status; under normal circumstances, when the handle is in the horizontal position, the product is in the OFF state.

5 Installation Method

The installation method is shown in the figure below. An extended shaft is required for the outer dimension of the cabinet, and the handle (shaft) installed on the panel (door) shall be coaxial (aligned) with the long shaft. If failed to align, the cabinet door is not easily closed and is operated difficultly to cause damage to the operating mechanism. The length of the long shaft shall be determined according to the installation distance from the product to the panel (door) and the length (about 30mm) of shaft inserted into the handle, and the default length of long shaft is 330mm. The installation method diagram is shown below.

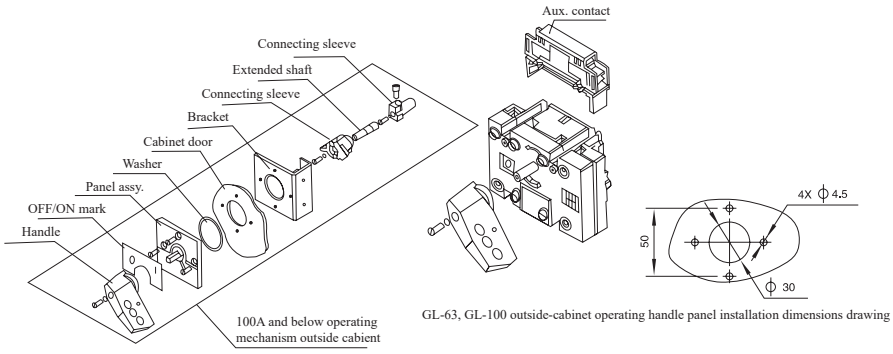

GL-63, GL-100 outside-cabinet operating handle panel installation dimensions drawing

The length of standard shaft outside cabinet for GL-63 and GL-100 is 200mm

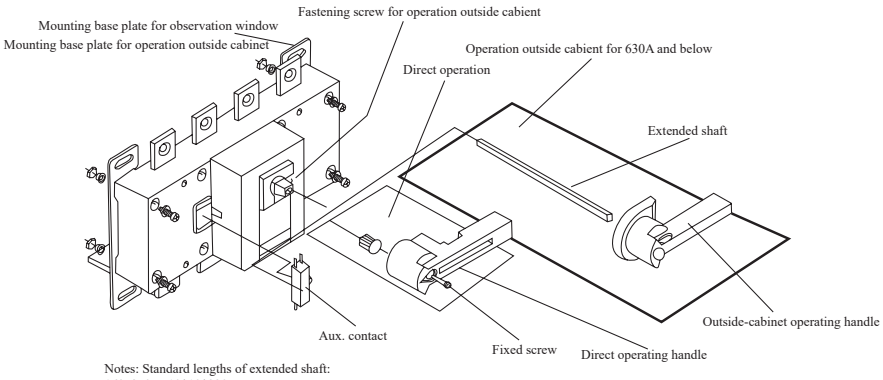

Notes: Standard lengths of extended shaft:
160, 250A: 10*10*330mm;
400, 630A: 10*10*330mm;

GL Series Switch Disconnector (YUN 3.0 Series)

6 Outline and Installation Dimensions

6.1 GL-100/3 outline and installation dimensions

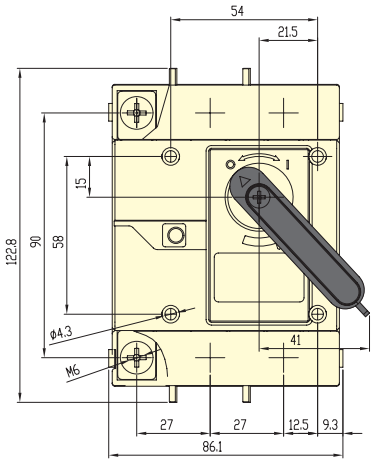

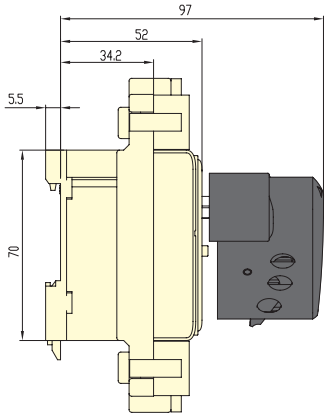

6.2 GL-100/4 outline and installation dimensions

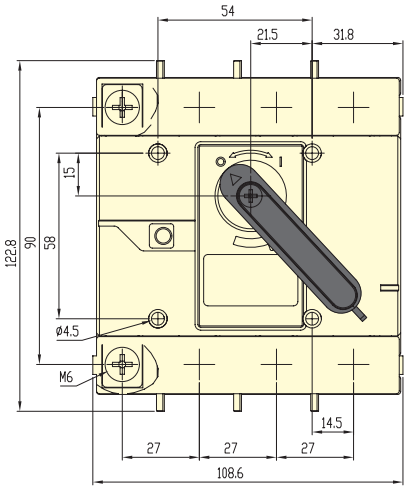

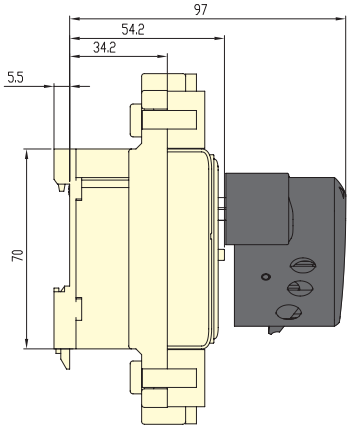

GL Series Switch Disconnector (YUN 3.0 Series)

6.3 GL-125~800 outline and installation dimensions

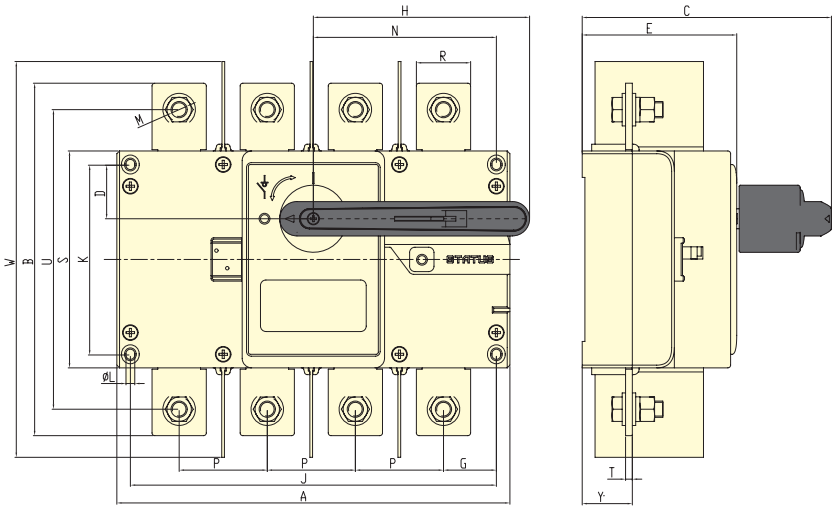

Spec.	Outline and installation dimensions (mm)																		
Current	A	B	C	D	E	G	H	J	K	L	M	N	P	R	S	T	U	W	Y
160/3	140	135	125	17	70	21	115	120	65	5.5	8	75	36	20	85	3	117	222	23
160/4	170	135	125	17	70	21	115	150	65	5.5	8	75	36	20	85	3	117	222	23
250/3	180	170	140	25	86	27.5	145	160	90	6.5	10	105	50	25	110	3	140	246	27
250/4	230	170	140	25	86	27.5	145	210	90	6.5	10	105	50	25	110	3	140	246	27
400/3	230	240	185	40	115	39	160	210	140	6.5	10	135	65	32	160	4.5	208	292	36.5
400/4	290	240	185	40	115	39	160	270	140	6.5	10	135	65	32	160	4.5	208	292	36.5
800/3	230	260	185	40	115	39	160	210	140	6.5	12	135	65	40	160	5	220	292	37
800/4	290	260	185	40	115	39	160	270	140	6.5	12	135	65	40	160	5	220	292	37

GL Series Switch Disconnector (YUN 3.0 Series)

6.4 GL-800 (large size) outline and installation dimensions

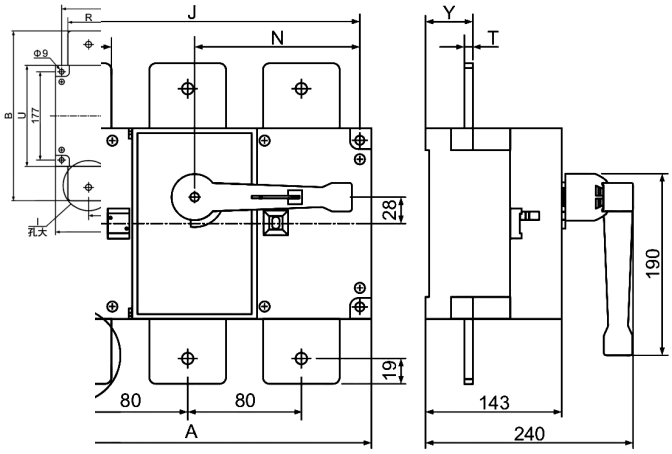

GL-800 direct operation

Spec.	Outline and installation dimensions (mm)							
Current	A	B	J	N	R	T	U	Y(Y1, Y2)
800/3Large volume	280	286	255	162	50	6	200	47

6.5 GL-1000~3150 outline and installation dimensions

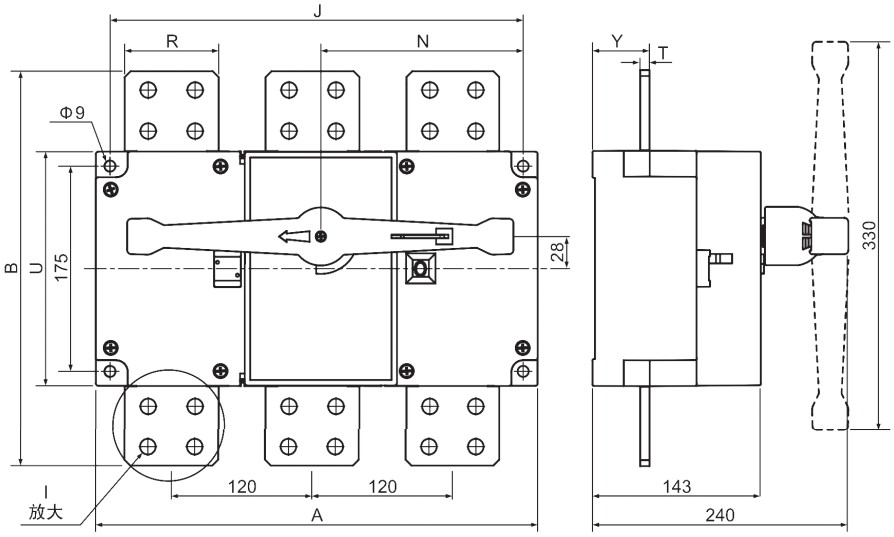

GL-1600 direct operation

GL Series Switch Disconnector (YUN 3.0 Series)

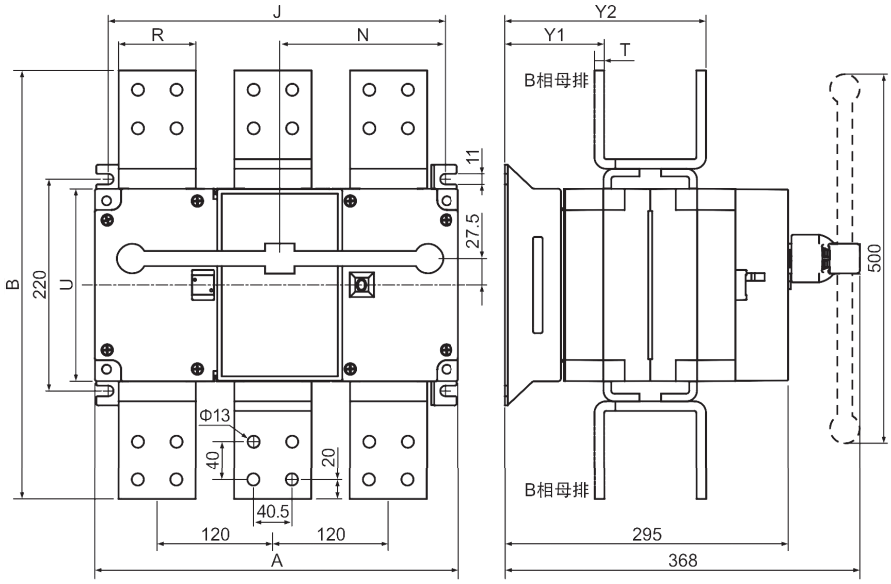

GL-3150 direct operation

7 Ordering Notice

Please specify the type and characteristics of the switch, the voltage grade, the current grade, the number of poles, the operation method, and the quantity when ordering. For special order, please contact our company's technical department.

For example: GL-160/3X 160A (Yun 3.0) 10 units.

HD, HS Knife Switch

1 Overview

HD series, HS series knife switch (hereinafter referred to as switch) is used in the complete set of AC 50Hz power distribution equipment with the rated operating voltage up to 690V and with the rated operating current up to 3000A as infrequent manual connection and disconnection circuit or as a disconnector. Among them:

1.1 The central handle type knife switch is primarily used in the power station as a switch disconnector not used to cut off a circuit with current.

1.2 The side front lever operating mechanism switch is mainly used in the switch cabinet for front operation and front With maintenance, and the operating mechanism can be installed on both sides of the cabinet.

1.3 The central front lever operating mechanism type switch is primarily used in the switch cabinet for front operation and rear With maintenance, and the operating mechanism is installed at the front side.

1.4 The side operated handle type switch is primarily used in power boxes.

1.5 The switch equipped with an arc extinguishing hood can cut off the appropriate current load, and other series of knife switches are only used as switch disconnectors.

2 Type Designation

□ □ □ – □ / □ □

- □ “0” means no arc extinguishing hood, “1” means with arc extinguishing hood
  For 11 series, “8” means front-panel wiring
  “9” mean back-panel wiring
- □ Number of poles (2, 3, 4), with 2P product only available for 11 series
- □ Resistive current (A)
- □ Additional code: For 13 series, “BX” means the rotary operation type; no “BX”: means the lever operation type
- □ Design code: “11” means the central handle type
  “12” means the side front lever operating mechanism type
  “13” means the central front lever operating mechanism type
  “14” means the side operating handle type
- □ “HD” means an openable knife switch, “HS” means an openable transfer switch.

Notes: 1. The BX rotary operating mechanism is available only for HD13 and HS13, and the wiring method is optional only for HD11 and HS11;
2. Please specify the model, features, voltage grade, current grade, number of poles, operation mode, and quantity of the switch when ordering;
3. Order example: To switch HS13 switch, 250 frame, rated current 250A, three poles, with arc extinguishing hood, rotary operation, 10 units
Please specify HS13BX-250/31 10 units.
Note: 1. The 2000A, 3000A shell frame product with an arc extinguishing hood adopts copper double busbar structure (single-phase double copper busbar), and the product without an arc extinguishing hood adopts single copper busbar. There are differences between the single copper busbar products and the double copper busbar products in the outline and installation dimensions;
2. The outline and installation dimensions of HD(HS)13BX-2000, 3000/31, 41 "double copper busbar type" products are shown in the sample figure 12 and table 13.
3. The outline and installation dimensions of the “single copper busbar type” product see the corresponding chart.

3 Technical Parameters

Table 1

Basic informaiton							
Frame rated current	250	400	630	1000	1600	2000	3000
Number of poles	2P、3P、4P						
Frequency (Hz)	50						
Rated operating voltage Ue (V)	415/690						
Rated insulation voltage Ui (V)	1000						
Rated impulse withstand voltage Uimp (kV)	12						
Rated operating current Ie (A)	200 250	400	600 630	1000	1500 1600	2000	3000
Rated short time withstand current Icw (kA/s)	10	15	20	25	30	30	50
Accessory informaiotn							
Handle / operating mechanism	■(Standard)						
Arc extinguishing hood	□(Optional)						

HD, HS Knife Switch

4 Operating Conditions

4.1 The upper limit of the ambient air temperature does not exceed +40℃, and the lower limit is not below -5℃.
4.2 The altitude at the installation site does not exceed 2000m.
4.3 Humidity: When the maximum temperature is 40℃, the relative humidity of air does not exceed 50%. A higher relative humidity is allowed at low temperatures, such as up to 90% at 20℃. Special measures are taken for condensation occurred occasionally due to temperature changes.
4.4 The Pollution degree of the surrounding environment is Level 3;
4.5 The switch shall be vertically installed in a place where there is no obvious shaking, impact vibration and rain and snow immersion and where there is no explosive danger medium that there is no gas or dust sufficient to cause metal corrosion and damage to the insulation.

5 Outline and Installation Dimensions

5.1 HD11 Front-Panel Wiring Connection (see Fig. 1, Table 2).

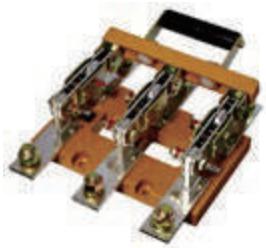

Fig. 1

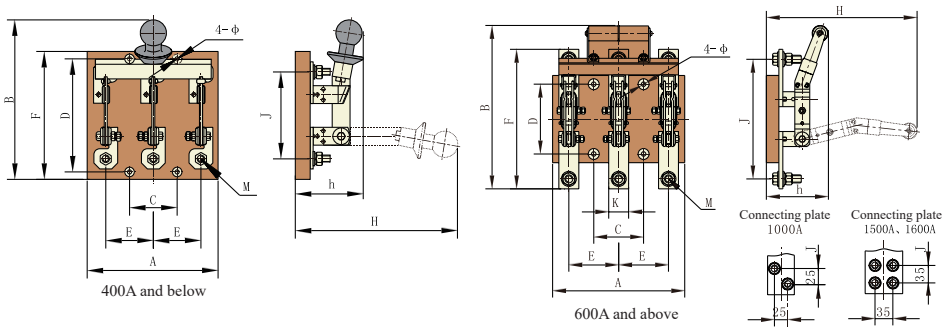

Table 2 (mm)

Spec.	100、160A			200、250A			400A			600、630A			1000A			1500、1600A		
	2P	3P	4P	2P	3P	4P	2P	3P	4P	2P	3P	4P	2P	3P	4P	2P	3P	4P
A	85	140	190	150	190	270	190	210	300	240	260	360	280	320	440	300	350	480
B	200	200	200	210	210	210	270	270	300	350	300	330	380	350	360	410	390	390
C	–	50	100	120	70	140	160	80	160	200	100	200	240	120	240	260	130	260
D	140	140	140	140	140	140	190	190	190	140	140	140	140	140	140	140	140	140
E	50	50	50	70	70	70	80	80	80	100	100	100	120	120	120	130	130	130
F	165	165	165	160	160	160	210	210	210	274	274	274	284	284	284	330	330	330
H	210	220	220	220	220	220	270	270	270	330	310	310	380	360	360	390	370	370
h	120	120	120	120	120	120	135	135	135	140	125	125	175	160	160	175	160	160
J	110	110	110	110	110	110	146	146	146	234	234	234	208	208	208	230	230	230
K	–	–	–	–	–	–	–	–	–	40	40	40	50	50	50	70	70	70
M	8	8	8	8	8	8	12	12	12	16	16	16	12	12	12	12	12	12
Φ	6	6	6	7	7	7	7	7	7	9	9	9	9	9	9	11	11	11

HD, HS Knife Switch

5.2 HD11 Back-Panel Wiring Connection (see Fig. 2, Table 3).

Fig. 2

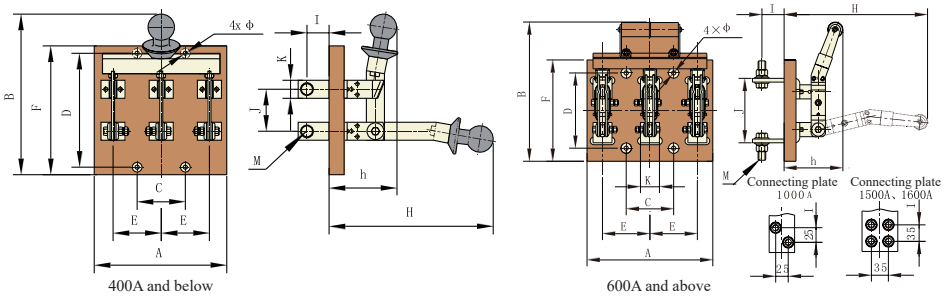

Table 3 (mm)

Spec.	200、250A			400A			600、630A			1000A			1500、1600A		
	2P	3P	4P	2P	3P	4P	2P	3P	4P	2P	3P	4P	2P	3P	4P
A	200	200	270	200	220	300	240	270	370	280	330	450	300	380	510
B	230	230	250	280	280	310	340	320	320	380	360	360	410	390	390
C	140	70	140	160	80	160	200	100	200	240	120	240	260	130	260
D	160	160	160	190	190	190	220	220	220	260	260	260	300	300	300
E	70	70	70	80	80	80	100	100	100	120	120	120	130	130	130
F	190	190	190	215	215	215	240	240	240	290	290	290	340	340	340
H	220	220	240	270	270	300	330	310	310	380	360	360	390	370	370
h	120	120	120	135	135	145	140	125	125	175	160	160	175	160	160
I	35	35	35	35	35	35	36	36	36	36	36	36	40	40	40
J	60	60	60	70	70	70	140	140	140	160	160	160	180	180	180
K	20	20	20	30	30	30	40	40	40	50	50	50	70	70	70
M	8	8	8	12	12	12	16	16	16	12	12	12	12	12	12
Φ	7	7	7	7	7	7	9	9	9	9	9	9	11	11	11

5.3 HS11 front-panel inlet and back-panel outlet (see Fig. 3, Table 4)

Fig. 3

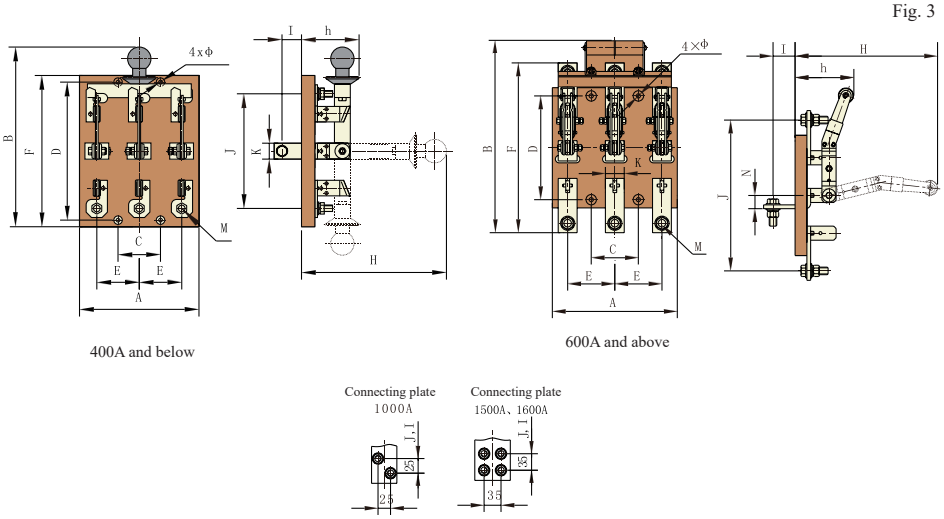

HD, HS Knife Switch

Table 4 (mm)

Spec.	200、250A			400A			600、630A			1000A			1500、1600A		
	2P	3P	4P	2P	3P	4P	2P	3P	4P	2P	3P	4P	2P	3P	4P
A	160	190	265	200	220	300	240	270	370	280	330	450	300	380	510
B	330	330	370	395	395	455	500	460	460	560	520	520	580	540	540
C	140	70	140	160	80	160	200	100	200	240	120	240	260	130	260
D	220	220	220	260	260	260	220	220	220	220	220	220	260	260	260
E	70	70	70	80	80	80	100	100	100	120	120	120	130	130	130
F	245	245	245	285	285	285	354	354	354	374	374	374	434	434	434
H	240	240	240	280	280	300	390	370	370	450	430	430	470	450	450
h	100	100	100	110	110	110	100	95	95	150	145	145	160	150	150
I	35	35	35	35	35	35	36	36	36	36	36	36	40	40	40
J	170	170	170	216	216	216	320	320	320	304	304	304	340	340	340
K	20	20	20	30	30	30	40	40	40	50	50	50	70	70	70
N	–	–	–	–	–	–	30	30	30	40	40	40	46	46	46
M	8	8	8	12	12	12	16	16	16	12	12	12	12	12	12
ϕ	7	7	7	7	7	7	9	9	9	9	9	9	11	11	11

5.4 HS11 back-panel wiring connection (see Fig. 4, Table 5)

Fig. 4

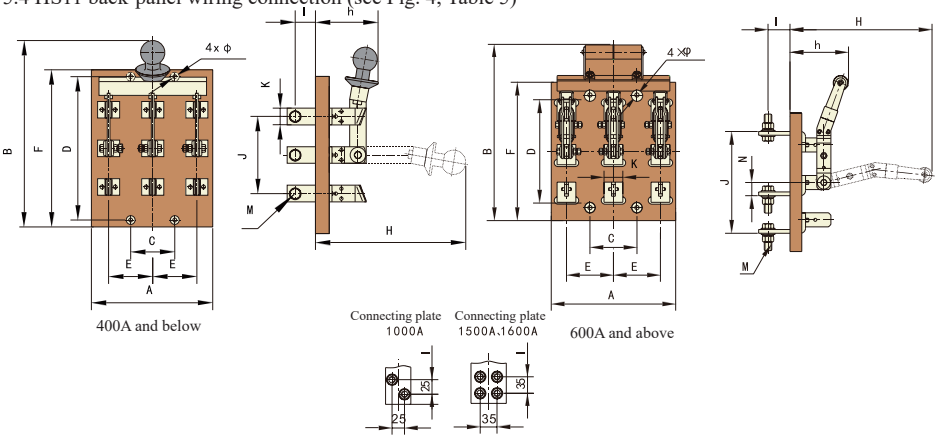

Table 5 (mm)

Spec.	200、250A			400A			600、630A			1000A			1500、1600A		
	2P	3P	4P	2P	3P	4P	2P	3P	4P	2P	3P	4P	2P	3P	4P
A	170	200	270	200	220	300	240	270	370	280	330	450	300	380	510
B	330	330	370	395	395	455	500	460	460	560	520	520	580	540	540
C	140	70	140	160	80	160	200	100	200	240	120	240	260	130	260
D	220	220	220	260	260	260	300	300	300	340	340	340	390	390	390
E	70	70	70	80	80	80	100	100	100	120	120	120	130	130	130
F	245	245	245	285	285	285	340	340	340	390	390	390	450	450	450
H	240	240	240	280	280	300	330	310	310	380	360	360	390	370	370
h	120	120	120	135	135	145	140	125	125	175	160	160	175	160	160
I	35	35	35	35	35	35	36	36	36	36	36	36	40	40	40
J	120	120	120	140	140	140	220	220	220	250	250	250	285	285	285
K	20	20	20	30	30	30	40	40	40	50	50	50	70	70	70
N	–	–	–	–	–	–	30	30	30	40	40	40	46	46	46
M	8	8	8	12	12	12	16	16	16	12	12	12	12	12	12
ϕ	7	7	7	7	7	7	9	9	9	9	9	9	11	11	11

HD, HS Knife Switch

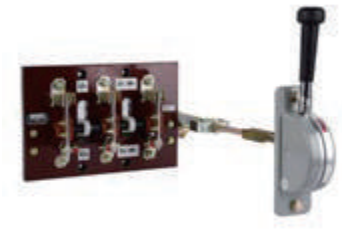

5.5 HD12 Outline and Installation Dimensions (see Fig. 5, Table 6)

Fig. 5

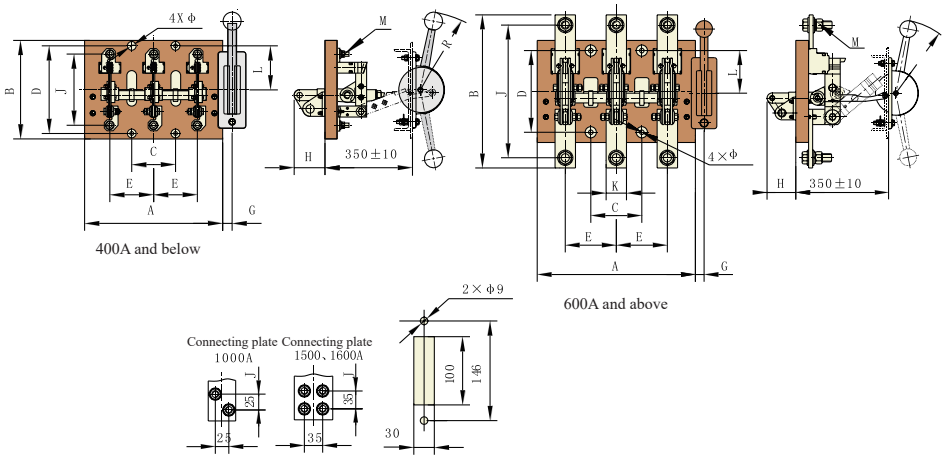

Operating handle panel hole dimension drawings

Table 6 (mm)

Spec.	200、250A			400A			600、630A			1000A			1500、1600A		
	2P	3P	4P	2P	3P	4P	2P	3P	4P	2P	3P	4P	2P	3P	4P
A	200	280	360	220	310	400	250	330	430	300	400	520	330	440	570
B	200	200	200	210	210	210	294	294	294	318	318	318	354	354	354
C	160	80	160	180	90	180	200	100	200	240	120	240	260	130	260
D	160	160	160	160	160	160	160	160	160	160	160	160	160	160	160
E	80	80	80	90	90	90	100	100	100	120	120	120	130	130	130
G	40	40	40	30	30	30	30	30	30	30	30	30	30	30	30
H	80	80	80	90	90	90	95	95	95	110	110	110	110	110	110
J	130	130	130	166	166	166	254	254	254	242	242	242	254	254	254
K	–	–	–	–	–	–	40	40	40	50	50	50	70	70	70
L	75	75	75	75	75	75	80	80	80	80	80	80	80	80	80
R	180	180	180	180	180	180	180	180	180	230	230	230	230	230	230
M	8	8	8	12	12	12	16	16	16	12	12	12	12	12	12
Φ	7	7	7	7	7	7	9	9	9	9	9	9	11	11	11

5.6 HS12 Outline and Installation Dimensions (see Fig. 6, Table 7)

Fig. 6

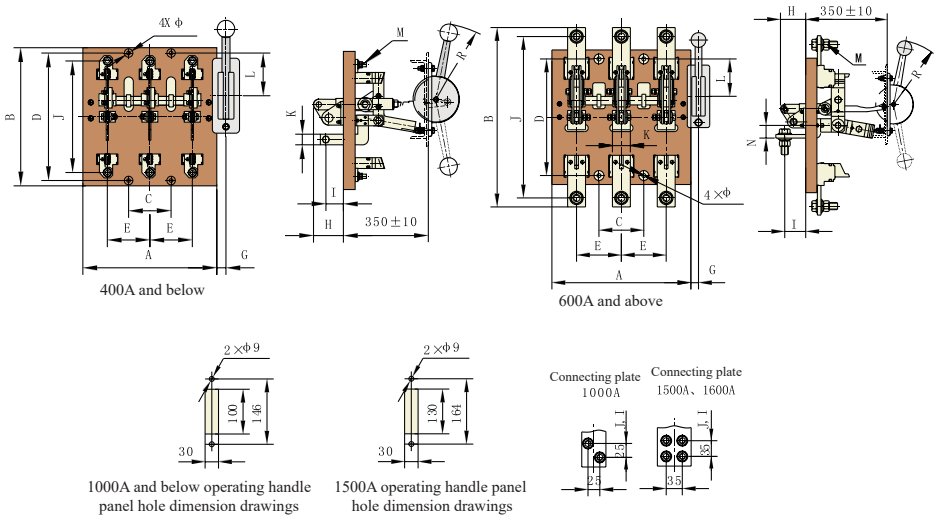

1000A and below operating handle panel hole dimension drawings

1500A operating handle panel hole dimension drawings

HD, HS Knife Switch

Table 7 (mm)

Spec.	200、250A		400A		600、630A		1000A		1500、1600A	
	3P	4P	3P	4P	3P	4P	3P	4P	3P	4P
A	280	360	310	400	330	430	400	520	440	570
B	280	280	305	305	394	394	434	434	485	485
C	80	160	90	180	100	200	120	240	130	260
D	240	240	240	240	240	240	240	240	260	260
E	80	80	90	90	100	100	120	120	130	130
G	40	40	30	30	30	30	30	30	30	30
H	80	80	90	90	95	95	110	110	110	110
I	35	35	35	35	36	36	36	36	40	40
J	210	210	256	256	354	354	362	362	385	385
K	20	20	30	30	40	40	50	50	70	70
L	75	75	75	75	70	70	60	60	70	70
N	–	–	–	–	30	30	40	40	46	46
R	180	180	180	180	180	180	230	230	230	230
M	8	8	12	12	16	16	12	12	12	12
Φ	7	7	7	7	9	9	9	9	11	11

5.7 HD13 Outline and Installation Dimensions (see Fig. 7, Table 8)

Fig. 7

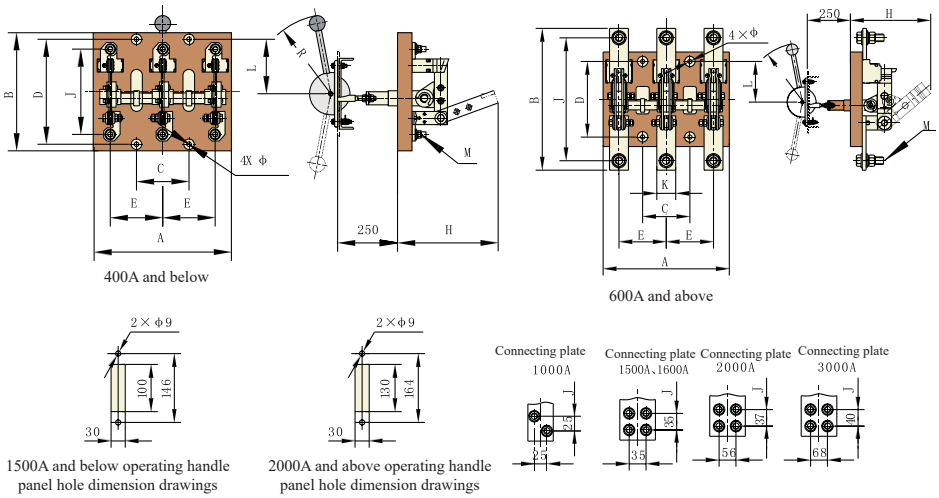

Table 8 (mm)

Spec.	200、250A		400A		600、630A		1000A		1500、1600A		2000A		3000A	
	3P	4P	3P	4P	3P	4P	3P	4P	3P	4P	3P	4P	3P	4P
A	210	300	245	335	260	370	310	440	340	480	480	660	580	780
B	200	200	210	210	294	294	315	315	354	354	360	360	400	400
C	80	160	90	180	100	200	120	240	130	260	180	360	200	400
D	160	160	160	160	160	160	160	160	160	160	160	160	160	160
E	80	80	90	90	100	100	120	120	130	130	180	180	200	200
H	160	160	185	185	190	190	230	230	235	235	230	230	235	235
J	130	130	166	166	254	254	242	242	254	254	250	250	280	280
K	–	–	–	–	40	40	50	50	70	70	100	100	120	120
L	75	75	75	75	80	80	80	80	80	80	80	80	80	80
R	180	180	180	180	180	180	230	230	230	230	280	280	280	280
M	8	8	12	12	16	16	12	12	12	12	12	12	16	16
Φ	7	7	7	7	9	9	9	9	11	11	11	11	11	11

Note: In the 2000A and 3000A columns of Table 8, there are outline and installation dimensions of the “Single copper busbar type (without arc extinguishing hood)” product.

HD, HS Knife Switch

5.8 HS13 Outline and Installation Dimensions (see Fig. 8, Table 9)

Fig. 8

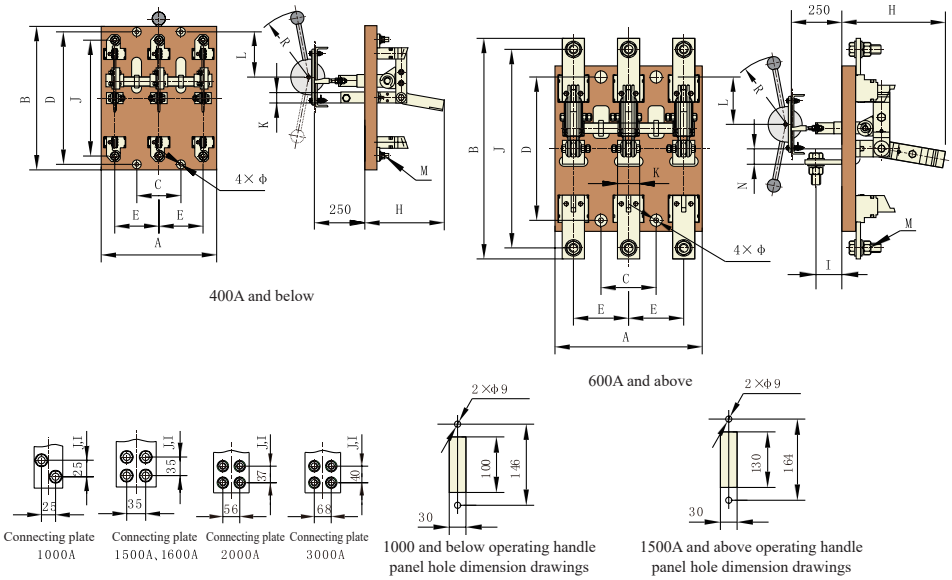

Table 9 (mm)

Spec.	200、250A		400A		600、630A		1000A		1500、1600A		2000A		3000A	
	3P	4P	3P	4P	3P	4P	3P	4P	3P	4P	3P	4P	3P	4P
A	210	290	240	335	270	370	330	450	370	500	500	680	600	800
B	260	260	300	300	394	394	434	434	485	485	480	480	540	540
C	80	160	90	180	100	200	120	240	130	260	180	360	200	400
D	240	240	240	240	240	240	240	240	260	260	260	260	260	260
E	80	80	90	90	100	100	120	120	130	130	180	180	200	200
H	153	153	185	185	190	190	235	235	255	255	235	235	260	260
I	35	35	35	35	38	38	32	32	40	40	48	48	50	50
J	210	210	256	256	354	354	362	362	385	385	370	370	404	404
K	–	–	–	–	40	40	50	50	70	70	100	100	120	120
L	78	78	70	70	70	70	65	65	70	70	60	60	70	70
N	–	–	–	–	30	30	40	40	46	46	50	50	50	50
R	180	180	180	180	180	180	230	230	280	280	280	280	280	280
M	8	8	12	12	16	16	12	12	12	12	12	12	16	16
ϕ	7	7	7	7	9	9	9	9	11	11	11	11	11	11

Note: In the 2000A and 3000A columns of Table 9, there are outline and installation dimensions of the “Single copper busbar type (without arc extinguishing hood)” product.

5.9 HD13BX Outline and Installation Dimensions (see Fig. 9, Table 10)

Fig. 9

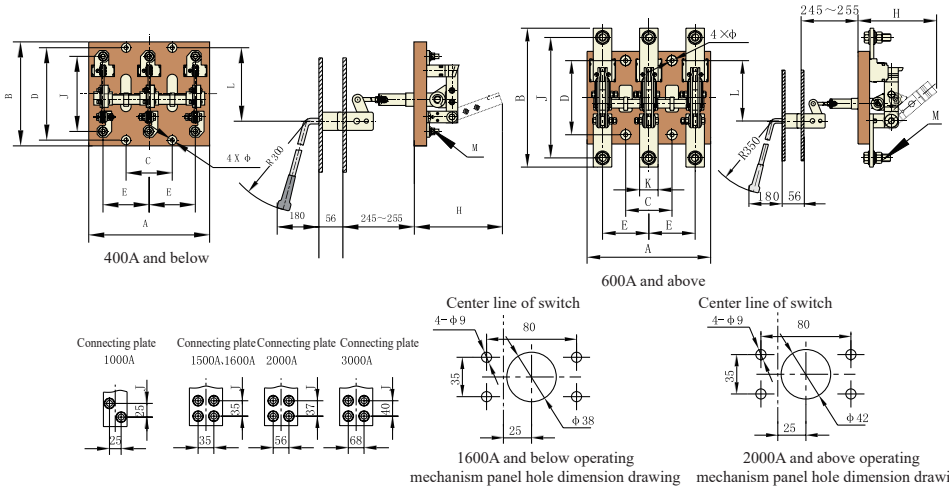

HD, HS Knife Switch

Table 10 (mm)

Spec.	200、250A		400A		600、630A		1000A		1500、1600A		2000A		3000A	
	3P	4P	3P	4P	3P	4P	3P	4P	3P	4P	3P	4P	3P	4P
A	210	300	245	335	260	370	310	440	340	480	480	660	580	780
B	200	200	210	210	294	294	315	315	354	354	360	360	400	400
C	80	160	90	180	100	200	120	240	130	260	180	360	200	400
D	160	160	160	160	160	160	160	160	160	160	160	160	160	160
E	80	80	90	90	100	100	120	120	130	130	180	180	200	200
H	160	160	185	185	190	190	230	230	235	235	230	230	235	235
J	130	130	166	166	254	254	242	242	254	254	250	250	280	280
K	–	–	–	–	40	40	50	50	70	70	100	100	120	120
L	130	130	130	130	135	135	135	135	135	135	135	135	135	135
M	8	8	12	12	16	16	12	12	12	12	12	12	16	16
ϕ	7	7	7	7	9	9	9	9	11	11	11	11	11	11

Note: In the 2000A and 3000A columns of Table 10, there are outline and installation dimensions of the “Single copper busbar type (without arc extinguishing hood)” product.

5.10 HS13BX Outline and Installation Dimensions (see Fig. 10, Table 11)

Fig. 10

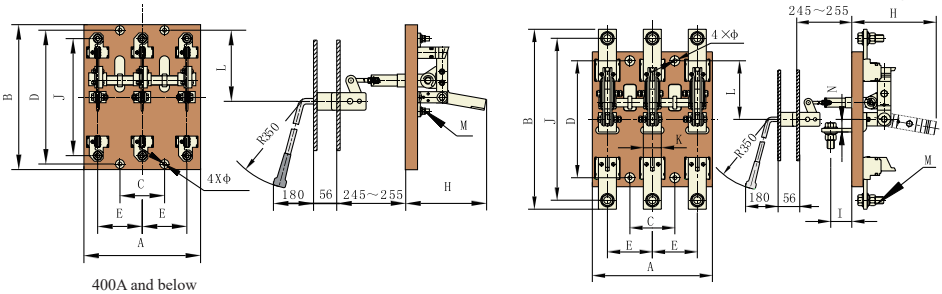

400A and below

600A and above

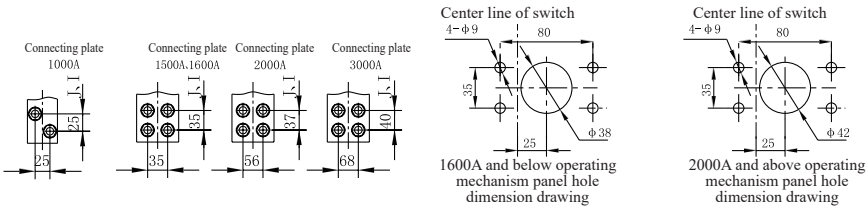

1600A and below operating mechanism panel hole dimension drawing

2000A and above operating mechanism panel hole dimension drawing

Table 11 (mm)

Spec.	200、250A		400A		600、630A		1000A		1500、1600A		2000A		3000A	
	3P	4P	3P	4P	3P	4P	3P	4P	3P	4P	3P	4P	3P	4P
A	210	290	240	335	270	370	330	450	370	500	500	680	600	800
B	260	260	300	300	394	394	434	434	485	485	480	480	540	540
C	80	160	90	180	100	200	120	240	130	260	180	360	200	400
D	240	240	240	240	240	240	240	240	260	260	260	260	260	260
E	80	80	90	90	100	100	120	120	130	130	180	180	200	200
H	153	153	185	185	190	190	235	235	255	255	235	235	260	260
I	35	35	35	35	36	36	32	32	40	40	48	48	50	50
J	210	210	256	256	354	354	362	362	385	385	370	370	404	404
K	–	–	–	–	40	40	50	50	70	70	100	100	120	120
L	130	130	130	130	135	135	135	135	135	135	135	135	135	135
N	–	–	–	–	30	30	30	30	46	46	50	50	50	50
M	8	8	12	12	16	16	12	12	12	12	12	12	16	16
ϕ	7	7	7	7	9	9	9	9	11	11	11	11	11	11

Note: In the 2000A and 3000A columns of Table 11, there are outline and installation dimensions of the “Single copper busbar type (without arc extinguishing hood)” product.

HD, HS Knife Switch

5.11 HD14 Outline and Installation Dimensions (see Fig. 11, Table 12)

Fig. 11

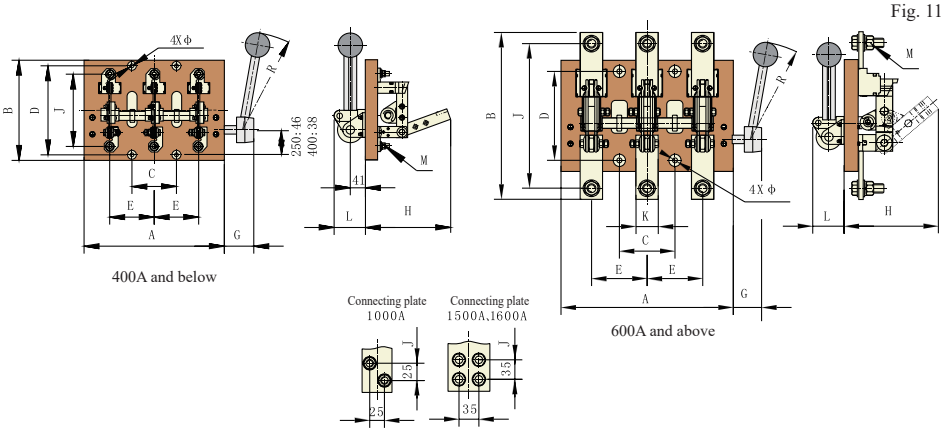

Table 12 (mm)

Spec.	200、250A		400A		600、630A		1000A	1500、1600A
	3P	4P	3P	4P	3P	4P	3P	3P
A	280	360	310	400	330	430	400	440
B	200	200	210	210	294	294	314	354
C	80	160	90	180	100	200	120	130
D	160	160	160	160	160	160	160	160
E	80	80	90	90	100	100	120	130
G	100	100	100	100	100	100	100	100
H+L	160+80	160+80	185+90	185+90	190+90	190+90	230+110	235+110
L1	48	48	48	48	48	48	53	53
J	130	130	166	166	254	254	242	254
K	–	–	–	–	40	40	50	70
R	250	250	250	250	250	250	250	250
M	8	8	12	12	16	16	12	12
Φ	7	7	7	7	9	9	9	11

5.12 HD (HS) 13BX-2000, 3000/31, 41 Product Outline and Installation Dimensions (see Fig. 12, Table 13)

Fig. 12

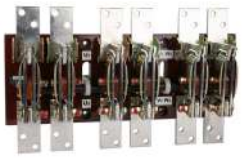

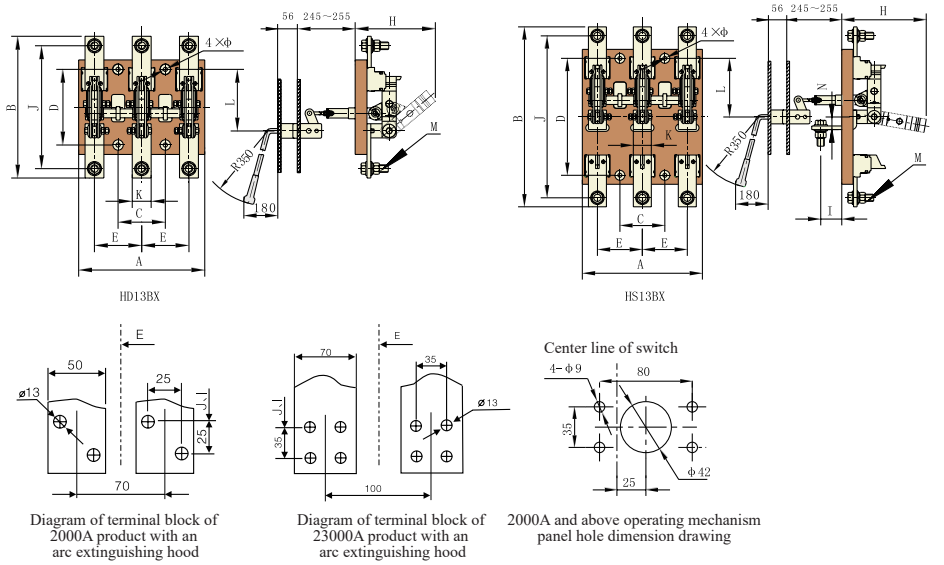

Note: 2000A, 3000A frame product with an arc extinguishing hood adopts copper dual busbar structure (single phase dual copper busbar), and adopts the single copper busbar if without an arc extinguishing hood!

HD, HS Knife Switch

Table 13 (mm)

Switch spec.	A	B	C	D	E	H	J	K	L	M	Φ	I	N
HD13BX-2000/31	530	318	180	160	180	230	242	50	135	12	11	–	–
HD13BX-2000/41	710	318	2-180	160	180	230	242	50	135	12	11	–	–
HD13BX-3000/31	710	354	230	160	230	235	254	70	135	12	11	–	–
HD13BX-3000/41	940	354	2-230	160	230	235	254	70	135	12	11	–	–
HS13BX-2000/31	530	434	180	260	180	235	362	50	115	12	11	36	40
HS13BX-2000/41	710	434	2-180	260	180	235	362	50	115	12	11	36	40
HS13BX-3000/31	710	485	230	260	230	235	385	70	125	12	11	40	46
HS13BX-3000/41	940	485	2-230	260	230	235	385	70	125	12	11	40	46

5.13 Fixed Thickness of HD, HS Mounting Plate and Distance from the Busbar to the Mounting Plate (Fig. 13, Table 14, Table 15)

Fig. 13

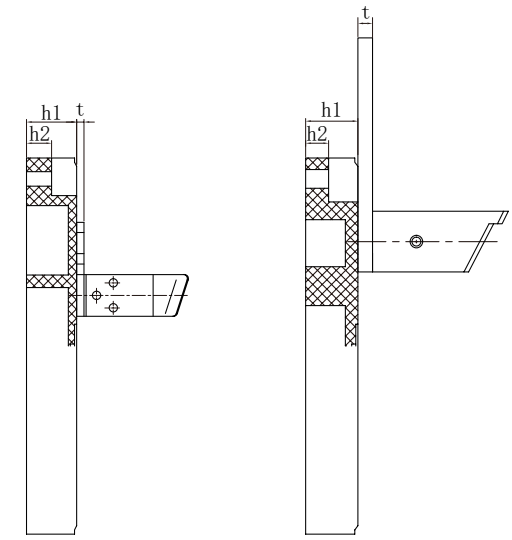

100~400A 600~3000A

Fixed Thickness of HD11 Mounting Plate and Distance from the Busbar to the Mounting Plate

Glass plate and rubber plate (old) dimensions

Table 14 (mm)

Spec.	100、160A	200、250A	400A	600、630A	1000A	1500、1600A	2000A		3000A	
							Single row	Double row	Single row	Double row
h1	/	/	/	20.5	21.5	24.5	/		/	
h2	10	11	11	11	15	15	15		15	
t	2	3.5	4	7	9	9	10	9	12	9
Busbar width	25	25	38	40	50	70	100	50	120	70

New HD11 rubber board mounting plate fixing depth and busbar spacing mounting plate depth

Table 15

Spec.	100A 160A	200A 250A	400A	600A 630A	1000A	1500A 1600A	2000A		3000A	
							Single row	Double row	Single row	Double row
h1	/	/	/	20.5	21.5	24.5	/		/	
h2	10	11	11	11	15	15	15		15	
t	2	3.5	4	7	9	9	10	9	12	9
Busbar width	25	25	38	40	50	70	100	50	120	70

HD, HS Knife Switch

New HD13 rubber board mounting plate fixing depth and busbar spacing mounting plate depth

Rubber plate (new) dimensions

Table 16 (mm)

Spec.	100、160A	200、250A	400A	600、630A	1000A	1500、1600A	2000A		3000A	
							Single row	Double row	Single row	Double row
h1	18	20. 5	22	23. 5	27	30	28. 5		28. 5	30
h2	10	11	11	11	15	15	15		15	
t	2	3. 5	4	7	9	9	10	9	12	9
Busbar width	25	25	38	40	50	70	100	50	120	70

6 Ordering Notice

Please specify the model, features, voltage grade, current grade, number of poles, operation method, and quantity of the switch when ordering. For special orders, please contact the company's technical department. For example: HS13BX-250/31 10 units.

HD11F Knife Switch

1 Overview

HD11F Knife Switch is suitable for the equipment with rated voltage up to AC690 (50Hz) and resistive current up to 1600A. This product is primarily used for isolation of power supply in the power distribution equipment in the industrial enterprise. The product with a lock can be used to prevent misoperation, greatly improving the personnel safety protection. It is widely used in various power cabinet and switchgear.

2 Type Designation

HD11F – □ / □ □ □

- "0": without a lock;
- "1": with a lock (with 1NO aux. contact and 1NC aux. contact)
- "8" : before-plate wiring
- Number of poles (3P)
- Resistive current (A)
- Knife switch

3 Technical Parameters

Basic Parameters					
Resistive current Ith(A)	250	400	630	1000	1600
Rated insulation voltage Ui(V)	1000				
Rated working voltage Ue(v)	415/690				
Usage category	AC-20A				
Rated working current Ie(A)	200 250	400	600 630	1000	1500 1600
Rated short-time withstand current (kA/s)	10	15	20	25	30
Mechanical life (times)	8,000	5,000	5,000	3,000	3,000
Aux. contact Ith(A) AC-15	0.8				

4 Operating Conditions

4.1 Ambient air temperature: -5℃~+40℃.

4.2 Altitude: not exceed 2,000 meters.

4.3 Humidity: The relative air humidity does not exceed 50% at the maximum temperature +40℃. A higher relative humidity is allowed at a lower temperature, such as up to 90% at 20℃. Special measures are taken for condensation occurred occasionally due to temperature changes.

4.4 Pollution degree: 3.

4.5 The switch shall be vertically installed in places where there is no obvious shaking, impact vibration or rain and snow erosion and no explosive and hazardous medium, and there is no enough gas and dust to cause metal corrosion and insulation damage in medium.

HD11F Knife Switch

5 Outline and Installation Dimensions

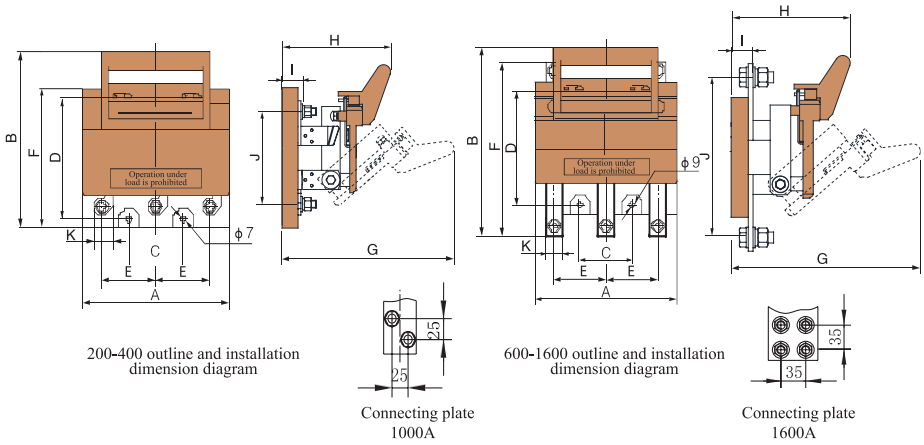

200-400 outline and installation dimension diagram

Connecting plate 1000A

600-1600 outline and installation dimension diagram

Connecting plate 1600A

Spec.	Outline dimensions and installation dimensions (mm)										
Current	A	B	C	D	E	F	G	H	I	J	K
200, 250	190	180	70	140	70	165	220	156	26.5	110	25
400	220	210	80	190	80	210	260	170	30	146	38
600, 630	260	280	100	140	100	274	260	175	32	234	40
1000	325	300	120	140	120	284	300	195	39	208	50
1500, 1600	360	340	130	140	130	330	330	210	39	230	70

Note: C and D are base plate installation dimensions

HD11F mounting plate fixation depth, and distance from the busbar to the mounting plate

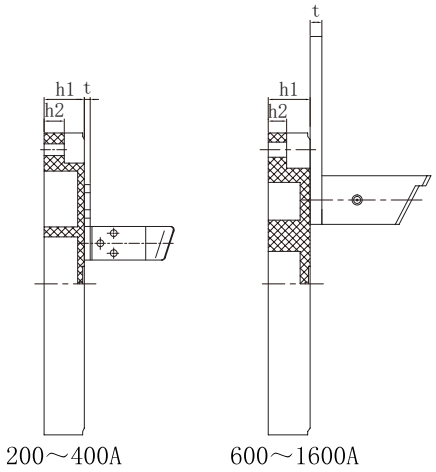

Spec.	200, 250A	400A	600, 630A	1000A	1500, 1600A
h1	23	25	25	30	30
h2	11	11	11	15	15
t	3.5	4	7	9	9
Busbar width	25	38	40	50	70

HD11F Knife Switch

6 Ordering Notice

The ordering unit must specify the model, features, voltage, current, number of poles, operation mode and quantity of switch. For special ordering requirements, please contact Tengen technical department.

For example: HD11F-250/381 10 pcs.

HS11FD Disconnector With Protective Cover and Grounding Protection

1 Overview

HS11FD series switch disconnector is used in the power distribution network in industrial and mining enterprises and villages to turn on/off the circuit and isolate the power supply and for short circuit earthing protection to prevent mis-wiring and mis-operation of low voltage power supply lines to avoid accidents.
This product can work together with automatic air circuit breakers or residual current operated protectors (integrated electrically operated closing and closing type products) to avoid disconnectors from turning on/off the circuit under load.
This product adopts insulated cover plate and insulated operating handle to prevent the operator from touching the live parts of the product during operation.

2 Type Designation

HS 11 FD – □ / □

- Number of poles (4)
- Resistive current (200A, 250A, 315A, 400A, 630A)
- Additional code: "F" means false-proof type, "D" means with earthing
- Design code: "11" means central handle type
- "HS" means knife transfer switch

3 Technical Parameters

Resistive current Ith (A)	200	250	315	400	630	
Rated operating voltage Ue (V)	AC380 50Hz				AC415/690 50Hz	
Rated operating current Ie (A)	200	250	315	400	600	630
Rated short time withstand current (kA/s)	5	5	8	8	20	
Micro switch capacity	220V/3A					
Mechanical life (times)	8000		5000			
Rated insulation voltage Ui (V)	660				800	

Note: 630 frame has not been produced.

4 Operating Conditions

4.1 The upper limit of ambient air temperature does not exceed +40℃, and the lower limit is not below -5℃.
4.2 The altitude at the installation site does not exceed 2000m.
4.3 Humidity: The relative humidity of the atmosphere does not exceed 50% at a maximum temperature of +40℃. A high relative humidity may be allowed at lower temperatures, such as 90% at 20℃. Special measures should be taken for condensation occurred occasionally due to temperature changes.
4.4 The Pollution degree in the surrounding environment is Level 3.
4.5 The switch shall be vertically installed in a place where there is no significant shaking, shock vibration, or rain and snow intrusion, and where there is no explosive or dangerous medium and no gas or dust sufficient to cause metal corrosion and damage to the insulation.

HS11FD Disconnector With Protective Cover and Grounding Protection

5 Product Introduction

5.1 Working Principle:
Move the product handle upwards to the limit position, turn four moving blades to the upper power supply side to make that four middle terminal blocks are connected with four upper terminal blocks respectively after four stationary contacts are closed to connect the power supply line. When the operating handle moves downwards 180° to the limit position, four moving blades leave the terminal block on the power supply side, and it moves continuously until four earthing stationary contacts are closed to make that the load side is earthed safely.

5.2 False-proof lock and unlock:
5.2.1 Lock: The switch disconnector is connected with the residual current protector and automatic circuit breaker in series. To turn on the power supply, turn off the power switch of the automatic switching residual current protector, then move the disconnector handle upwards until the switch is turned on, and buckle the false-proof lock with the product handle. At this time, the internal switch of the false-proof device is turned on, and then the residual current protector power supply is connected for power-on.

5.2.2 Unlock: When power outage is required for inspection, turn off the residual current protector power switch to cut off the power supply, and unlock the false-proof buckle to leave the disconnector handle. If the product handle is mis-operated, the handle will be locked and cannot be disengaged; to solve this, move the false-proof latch downwards to unlock; at this time, the internal switch of the false-proof device is turned off to disconnect the residual current protector power supply to cut off main circuit. As the blades at the power end shares four moving blades with the blades at the earthing terminal, this can effectively prevent the closing with the earth wire.

6 Outline and Installation Dimensions

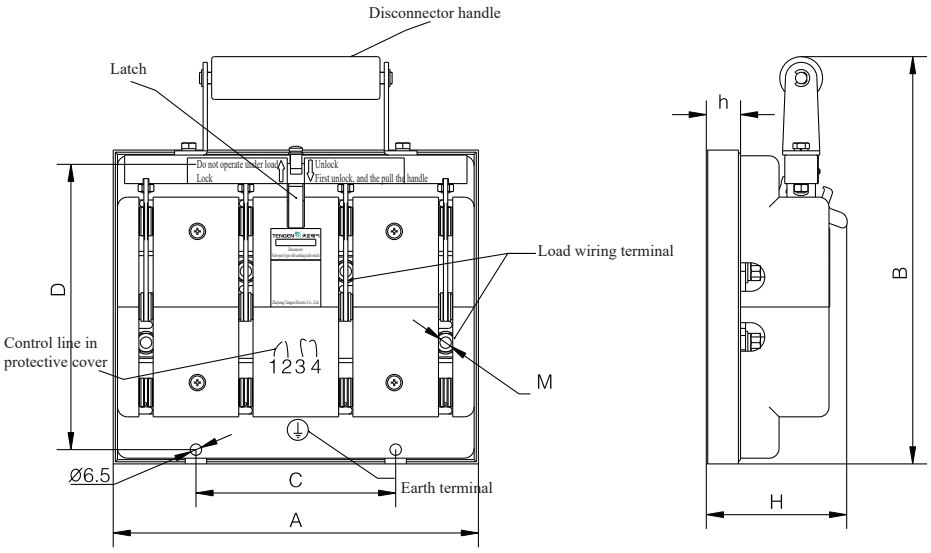

Fig. 1 Product Installation Dimensions

Frame	A	B	C	D	h	H	M
HS11FD-250(200)/4	256	286	140	200	24	100	8
HS11FD-400(315)/4	296	371	160	280	26	115	12

HS11FD Disconnector With Protective Cover and Grounding Protection

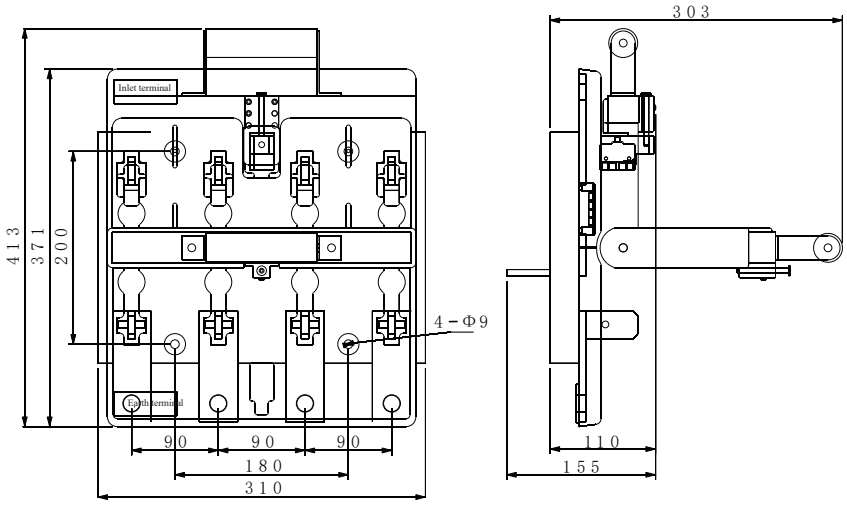

HS11FD-630 product installation dimensions

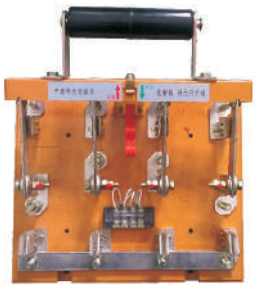

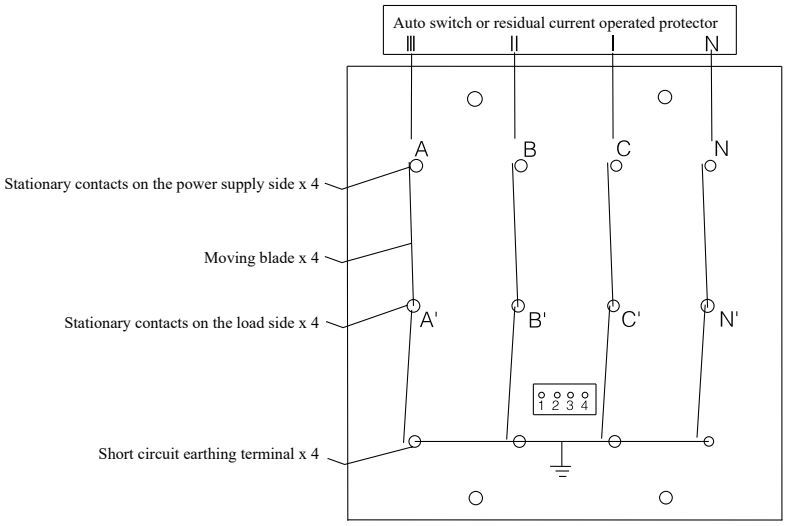

Fig. 2 Wiring principle

Wiring description: There are four small terminal blocks on the earthing terminal side of the disconnector, numbered 1, 2, 3, 4. (1) After the 200~400A false-proof switch handle is unlocked, 1 and 2 are open, and 3 and 4 are closed; when the false-proof switch handle is buckled with the disconnector handle, 1 and 2 are closed, and 3 and 4 are open; (2) After the 630A frame handle is unlocked, 1 and 4 are open, and 1 and 3 are closed; after then handle is locked, 1 and 4 are closed, and 2 and 3 are open.

HS11FD Disconnector With Protective Cover and Grounding Protection

7 Power-on and Power Outage Operation

7.1 Power-on operation: After confirming no voltage on the wiring on the upper side of the disconnector, pull the product handle upwards to the upper stop, and move the false-proof latch upwards until it is fastened firmly, so that the micro switch in the false-proof switch is turned on. Turn on the auxiliary power switches of the matching automatic switch circuit breaker and the residual current operated latch protector. At this time, the disconnector is then powered on (the different time is delayed according to the different matched product).

7.2 Power outage operation; First turn off the auxiliary power switches of the matching automatic switch circuit braker and the residual current operated protector to make the disconnector is in the non-voltage state, further confirm that the product is in the non-voltage state, and then separate the fail-proof latch with the disconnector handle for unlock. Push the switch handle downwards to 180° lower stop to fasten it. Four terminals on the lower side of knife switch are earthed with the power supply lines. For safety reasons, further confirm that the switch is in the no-voltage state before proceeding to the next step.

Please hang the “Do Not Power On” sign on the disconnector handle during With maintenance.

8 Operation and With maintenance

8.1 Under normal circumstances, it is prohibited to conduct the opening and closing operations with load. Before the closing operation, turn the locking mechanism to the Open position manually; after the closing operation, check that the locking mechanism is in the Closed position.

8.2 The disconnector With maintenance and test are allowed only when the line is isolated from the power supply (that is deenergized). When earthing, please check no voltage is applied on the line end, and then close the short circuit earthing terminal.

8.3 Please repair the burnt moving blade and stationary contact and remove dust and dirt from the disconnector regularly.

8.4 If found severely damaged stationary contact, moving blade, insulating base plate or insulating cover, it is recommended to replace them if this affects the operation.

8.5 Check whether the fasteners are connected reliably, and apply industrial petroleum jelly oil (conductive paste) onto the surface of the blade and other mechanical friction parts.

8.6 The disconnector shall be checked regularly after putting into operation.

8.7 Regularly check the contacts and wire leads of the microswitch.

The fail-proof switch with earthing knife has power distribution, power off, obvious breaking point, and short circuit earthing functions. In the event of the power outage of lines, the earthing knife is directly closed to realize the short circuit earthing protection of line, and there is an obvious breaking point on the power supply side. The use of fail-proof switch with an earthing knife and the mechanical and electrical locking devices of the residual current protector can effectively prevent mis-operation accidents such as power on/off under load and power-on with earthing wire.

9 Ordering Notice

Please specify the model, features, voltage grade, current grade, number of poles, operation method, and quantity of the switches when ordering; for special order, please contact our company’s technical department.
For example: HS11FD-200/4 10 units.

HD11, HS11/B Knife Switch with Protective Cover

1 Overview

HD11, HS11/B Knife Switch with Protective Cover is a derived product newly developed based on HD11 and HS11 as an ideal alternative product instead of HD11, HD11F and HS11, greatly improving the personnel safety protection to prevent electric shock.

This series of product are primarily used in the low-voltage power distribution equipment for infrequent manual connection, disconnection, and isolation of power supply.

2 Type Designation

H□ □ — □ / □ 8 B

- "B" : with protective cover
- "8" : wiring before the plate
- Number of poles (2, 3, 4)
- Resistive current (A)
- Design code "11" : the central handle type
- Category code:
  "HD" : the open-type knife switch
  "HS" : the open-type knife transfer switch

3 Technical Parameters

Table 1

Resistive current (A)	100	200	250 Small volume	250		400	630		1000
Rated working current (A)	63, 80 100	125, 160 200	250	200	250	400	600	630	1000
Rated working voltage (V)	415/690								
Rated insulation voltage (V)	1000								
Rated impulse withstand voltage (kV)	12								
Usage category	AC-20A								
Mechanical life (times)	10,000	10,000	10,000	10,000		10,000	5,000		3,000
Short-time withstand current (Ka/1s)	5	5	5	10		15	20		25
Operating force (N)	≤300	≤300	≤300	≤300		≤400	≤400		≤450

Note: Frame current 250 model has two small-size and conventional-size specifications, and the conventional size product will be provided unless specified.

HD11, HS11/B Knife Switch with Protective Cover

4 Operating Conditions

4.1 Ambient air temperature: not higher than +40℃, and is not below than -5℃.

4.2 Altitude: not exceed 2,000 meters.

4.3 Humidity:
The relative air humidity does not exceed 50% at the maximum temperature +40℃. A higher relative humidity is allowed at a lower temperature, such as up to 90% at 20℃. Special measures are taken for condensation occurred occasionally due to temperature changes.

4.4 Pollution degree: 3

4.5 The switch shall be installed in places where there is no obvious shaking, impact vibration or rain and snow erosion and no explosive and hazardous medium, and there is no enough gas and dust to cause metal corrosion and insulation damage in medium.

5 Outline and Installation Dimensions

5.1 HD11 wiring before the plate (see Fig. 1 and Table 2)

Fig. 1

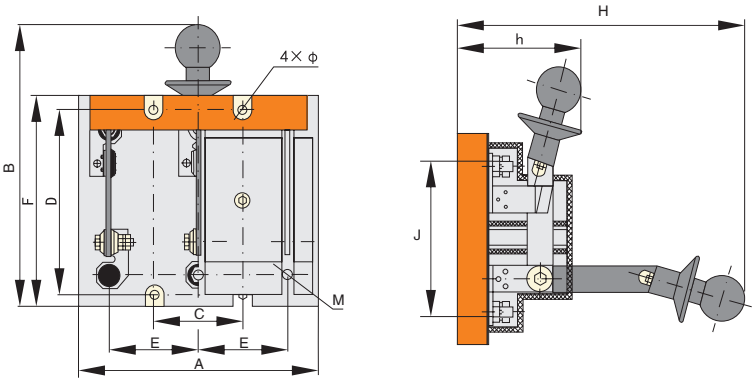

Table 2

Model	Spec.	100, 200, 250 Small-size			250			400		600、630		1000	
HD11 protective open-type knife switch with before-plate wring		2P	3P	4P	2P	3P	4P	3P	4P	3P	4P	3P	4P
	A	85	140	190	120	190	270	210	300	260	330	320	435
	B	200	200	200	210	210	210	270	270	330	330	350	350
	C	-	50	100	-	70	140	80	160	100	180	115	230
	D	140	140	140	140	140	140	190	190	140	140	140	140
	E	50	50	50	70	70	70	80	80	100	90	115	115
	F	165	165	165	165	165	165	210	210	290	290	290	290
	H	220	220	220	220	220	220	270	300	305	305	335	335
	h	110	110	110	120	120	120	135	135	125	125	160	160
	M	8	8	8	8	8	8	12	12	16	16	12	12
	φ	7	7	7	7	7	7	7	7	9	9	9	9

HD11, HS11/B Knife Switch with Protective Cover

5.2 HS11 wiring before the plate (see Fig. 2 and Table 3)

Fig. 2

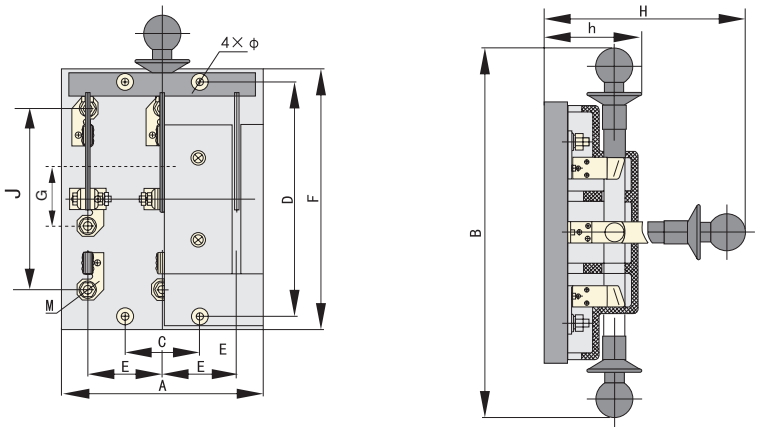

Table 3

Model	Spec.	200, 250 Glass plate		400 Glass plate	
		3P	4P	3P	4P
HS11 protective knife switch with before-plate wiring	A	186	256	216	296
	B	330	330	430	430
	C	70	140	80	160
	D	220	220	280	280
	E	70	70	80	80
	F	265	245	312	312
	H	240	240	280	300
	h	100	100	110	110
	J	170	170	243	243
	G	50	50	75	75
	M	8	8	12	12
	φ	7	7	7	7

5.3 HD11, HS11/B mounting plate fixation depth, and distance from the busbar to the mounting plate (see Fig.3 , Table 4 and Table 5)

Fig. 3

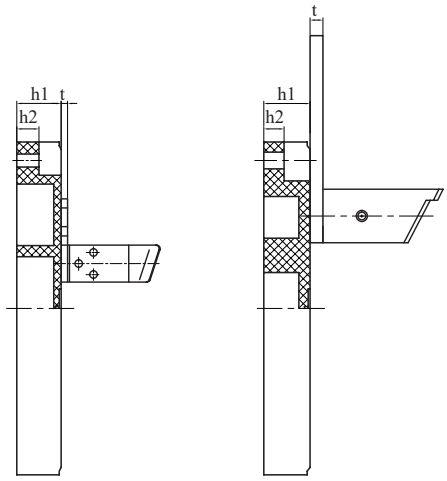

63～400A　　600～1000A

HD11, HS11/B Knife Switch with Protective Cover

Table 4

Spec.	100, 200, 250 Small-size	250	400	600, 630	1000
h1	/	/	/	20.5	21.5
h2	10	11	11	11	15
t	2	3.5	4.5	7	9
Busbar width	25	25	38	40	50

New HD11B rubber board mounting plate fixing depth and busbar spacing mounting plate depth

Table 5

Spec.	100, 200, 250 Small-size	250	400	600, 630	1000
h1	/	/	/	20.5	21.5
h2	10	11	11	11	15
t	2	3.5	4.5	7	9
Busbar width	25	25	38	40	50

6 Ordering Notice

The ordering unit must specify the model, features, voltage, current, number of poles, operation mode and quantity of switch. For special ordering requirements, please contact Tengen technical department.

For example: HD11-250/38B small-size, 10 pcs.

TGHD Switch Disconnector

1 Overview

TGHD series is a new product developed by our company on the basis of HD series, and is an ideal substitute product for HD series, greatly improving the personal safety protection to prevent accidental electric shock. This series of products is primarily used in low-voltage power distribution equipment for infrequent manual disconnection, disconnection and isolation of switch.

2 Type Designation

TG H□ □ – □ / □ 8 B

- B — "B" means with protective cover
- 8 — "8" means front-panel wiring connection; "1" means with arc extinguishing hood (only for 13 series)
- □ — Number of poles (2, 3, 4) (2P product is available only for 11 series 160)
  (4P product is available only for 11 series 160, 250, and 400)
- □ — Rated operating current (A)
- □ — Design code "11" means central handle type
  "13N" means central lever operation
  "13NBX" means central rotary operation
- H — Category code "HD" single-throw knife switch
- TG — Enterprise code

3 Technical Parameters

Table 1

Resistive current Ith (A)	160	250	400	630	1000	1600
Rated operating current Ie (A)	63、80 100、160	200 250	400	600 630	800 1000	1250 1600
Rated short time withstand current Icw (kA/s)	5	10	15	25	12	19.2
Rated operating voltage Ue (V)	415/690/800					
Rated insulation voltage Ui (V)	1000					
Rated impulse withstand voltage Uimp (kV)	12					
Usage category	AC-20A / AC-21A				AC-20A / AC-21B	
Mechanical life (times)	10000					

Note: TGHD11N series has 160 frame, and TGHD13N has no 160 frame.

TGHD11N DC product

Table 2

Conventional thermal current Ith	Rated operating current Ie(A)	Rated insulation voltage Ui(V)	Rated operating voltage Ue(V)	Rated impulse withstand voltage Uimp(kV)	Rated short time withstand current Icw(kA/s)	Use category	Life (times)
							Mechanical life
250	200	1000	DC250V (2P) DC500V (3P)	12	10	DC-20A	8000
	250						

TGHD Switch Disconnector

4 Operating Conditions

4.1 The ambient air temperature is not higher than +40°C, and not below 5°C.

4.2 The altitude at the installation site does not exceed 2000m.

4.3 Humidity:

When the maximum temperature is +40°C, the relative humidity of air does not exceed 50%. A higher relative humidity is allowed at low temperatures, such as up to 90% at 20°C. Special measures are taken for condensation occurred occasionally due to temperature changes.

4.4 The Pollution degree of the surrounding environment is Level 3;

4.5 The switch shall be vertically installed in a place where there is no obvious shaking, impact vibration and rain and snow immersion and where there is no explosive danger medium that there is no gas or dust sufficient to cause metal corrosion and damage to the insulation.

5 Outline and Installation Dimensions

5.1 TGHD11N Outline and Installation Dimensions (see Fig. 1, Table 3)

Fig. 1

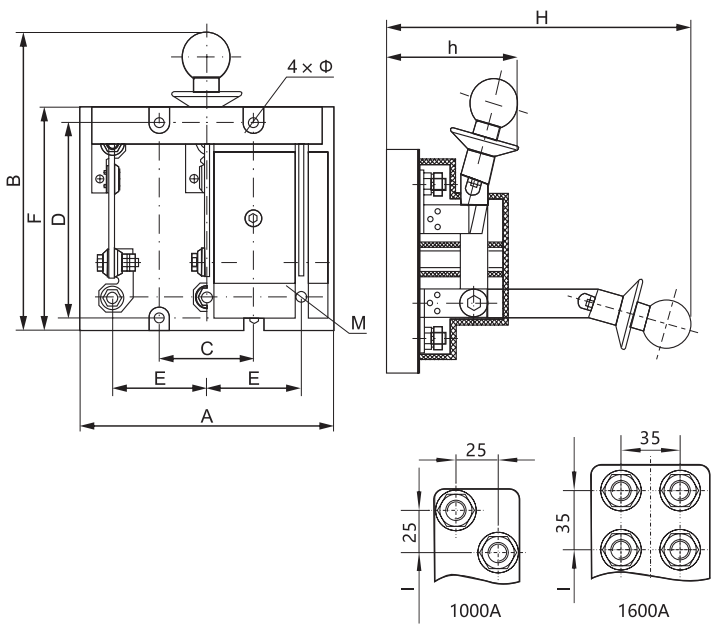

Table 3

Model & Spec.	160			250		400		630	1000	1600
	2P	3P	4P	3P	4P	3P	4P	3P	3P	3P
A	78	118	158	170	200	195	235	225	280	320
B	160	160	160	195	195	250	250	255	325	370
C	/	40	80	60	100	70	120	80	100	110
D	100	100	100	140	140	140	140	140	140	140
E	40	40	40	60	50	70	60	80	100	110
F	120	120	120	158	158	180	180	195	280	320
H	178	178	178	210	210	260	260	265	320	360
I	—	—	—	—	—	—	—	—	205	220
h	82	82	82	105	105	115	115	125	150	173
M	6	6	6	8	8	10	10	12	12	12
φ	7	7	7	6.5	6.5	6.5	6.5	8.5	9	9

Note: The dimensions of TGHD11N-100 product are same as those of TGHD11N-160.

TGHD Switch Disconnector

5.2 TGHD13N-250~1600 Outline and Installation Dimensions (see Fig. 2, Table 4)

Fig. 2

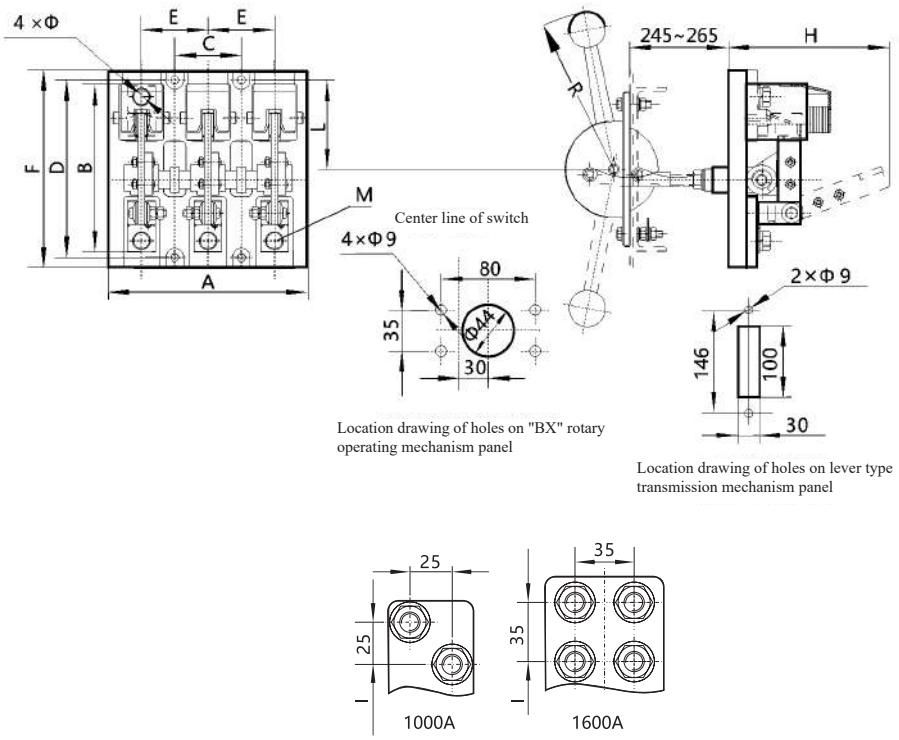

Table 4

Model & Spec.	250	400	630	1000	1600
	3P	3P	3P	3P	3P
A	180	204	232	282	322
B	150	200	224	300	340
C	60	70	80	100	110
D	160	160	160	160	160
E	60	70	80	100	110
F	178	200	224	185	195
H	160	185	190	235	260
I	—	—	—	225	240
L	78	80	80	82	83
R	180	180	180	230	230
M	8	10	12	12	12
φ	7	7	9	9	9

TGHD Switch Disconnector

5.3 Fixed Thickness of TGHD11N Mounting Plate and Distance from the Busbar to the Mounting Plate (Fig. 3, Table 5)

Fig. 3

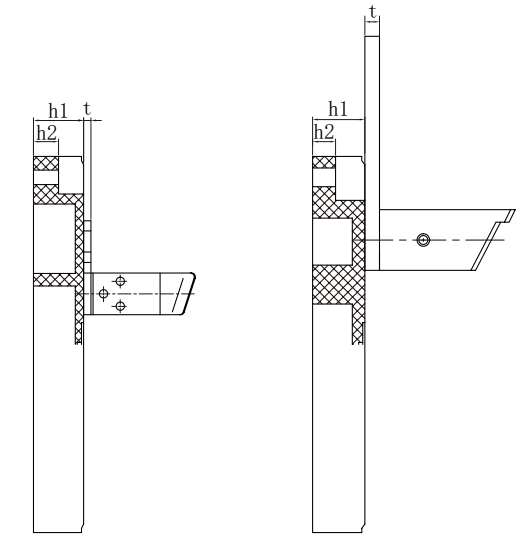

160 ~ 400A　　600 ~ 1600A

Table 5

Model & Spec.	160	250	400	630	1000	1600
h1	25	24	24	25	30	30
h2	7	7	22	22	11	14
t	1.5	1.5	2	3	7	8
Busbar width	18	20	30	40	50	70

TGHD Switch Disconnector

5.4 Fixed Thickness of TGHD13N Mounting Plate and Distance from the Busbar to the Mounting Plate (Fig. 4, Table 6)

Fig. 4

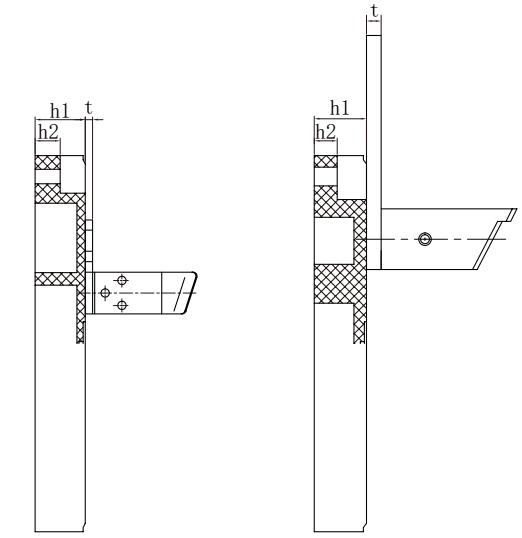

250 ~ 400A　　600 ~ 1600A

Table 6

Model & Spec.	250	400	630	1000	1600
h1	25	25	25	30	30
h2	8	19	22	11	14
t	1.5	2	3	7	8
Busbar width	20	30	40	50	70

5.5 DC wiring method

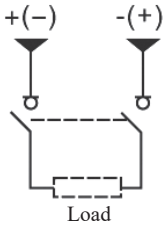

2P (DC250V)

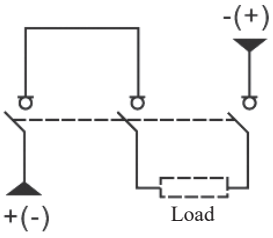

3P (DC500V)

6 Ordering Notice

Please specify the model, features, voltage grade, current grade, number of poles, operation method, and quantity of the switch when ordering. For special orders, please contact the company's technical department.

For example: TGHD11N-100 / 38B 10 units.

TGHD13N-250 / 31 10 units

TGHRT17 Fuse Switch Disconnector

1 Overview

TGHRT17 Fuse Switch Disconnector is used in the AC 50Hz low-voltage power distribution equipment with the rated voltage up to 690V and with the rated current up to 630A and in the power distribution circuit and motor circuit with high short circuit current as power switch, switch disconnector, and emergency switch; it is generally not used to directly turn on or turn off a single motor.

This product complies with IEC 60947-3 standards.

2 Type Designation

HR 17N – □ / □ □ □ D

- D: means the blade type
- M: With busbar type base, applicable current: 250, 400, 630;
  Default: without busbar type base
- "0": Without auxiliary switch;
  "1": With a set of auxiliary switches
- Number of poles 3:3P
- Frame current: 250, 400, 630
- Design code
- Switch disconnector

3 Technical Parameters

Table 1

Main technical parameters			
Frame current Ith	250	400	630
Rated operating current Ie (A)	250	400	630
Rated insulation voltage Ui (V)	1000		
Rated operating voltage Ue (V)	AC415/690 50Hz		
Rated impulse withstand voltage Uimp (kV)	12		
Usage category	AC-23B/AC-22B		
Rated short circuit withstand current Icw (kA/s)	10	15	
Rated short circuit making capacity Icm (kA)	17	30	

4 Operating Conditions

4.1 Ambient air temperature

The upper limit of ambient air temperature does not exceed +40°C, and the mean temperature does not exceed +35°C within 24 hours. The lower limit of ambient air temperature is not below -5°C.

4.2 Altitude

The altitude at the installation site does not exceed 2000m.

4.3 Atmospheric conditions

4.3.1 The relative humidity of the atmosphere at the installation site does not exceed 50% at a maximum temperature of +40°C. A high relative humidity may be allowed at lower temperatures, such as 90% at 20°C. Special measures should be taken for condensation occurred occasionally due to temperature changes.

4.3.2 Pollution degree: 3.

4.4 Installation category: III; There is no significant shaking, shock vibration, or rain and snow intrusion at the installation site; there is no explosion hazard medium and there is no gas or dust sufficient to cause metal corrosion and damage to the insulation in the medium at the installation site.

4.5 The product shall be installed vertically, and the position indicated by the indicator end of the handle should be consistent with the product status.

TGHRT17 Fuse Switch Disconnector

5 Features

5.1 Structure

TGHRT17 Fuse Switch Disconnector is primarily composed of a mounting base, a handle, and an anti-electric protective cover. The housing is made of plastic and has advantages of compact structure, light weight, reliable operation, safety, convenient installation, and artistic appearance.

5.2 Aux. switch

The switch can be equipped with an auxiliary switch used to clearly indicate that the switch is in the “ON” or “OFF” position.

5.3 Busbar base

The switch can be equipped with a busbar base, and this base can be installed on the 60mm busbar system with a busbar thickness of 10mm without holes required.

6 Outline and Installation Dimensions

6.1 Installation and outline dimensions for fixed type see Table 2 and Fig. 1

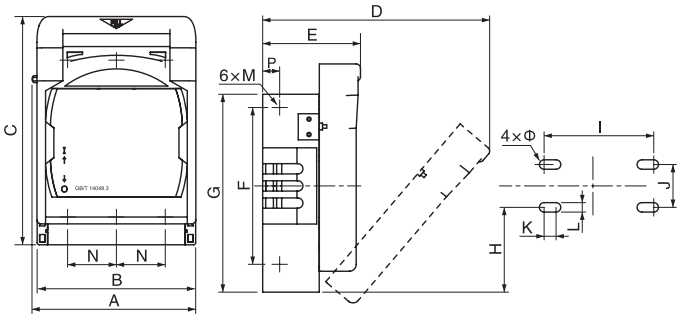

Fig. 1 HR17N/D series fixed type installation and outline dimensions drawing

Table 2

Model	A	B	C	D	E	F	G	H	I	J	K	L	φ	M bolt	N	P
HR17N/ D-250/3D	191	186	267	300	115	183	231	99	128	50	14	11	-	M10	57	22
HR17N/ D-400/3D	214	210	300	330	127	210	252	103	130	50	-	11	11	M10	65	25
HR17N/ D-630/3D	214	210	300	330	127	210	252	103	130	50	-	11	11	M10	65	25

Notes: "F, N" dimensions are the spacing dimension between terminal blocks, and "P" dimension is the distance from the terminal block to the floor.

6.2 Installation and outline dimensions for busbar type see Table 3 and Fig. 2

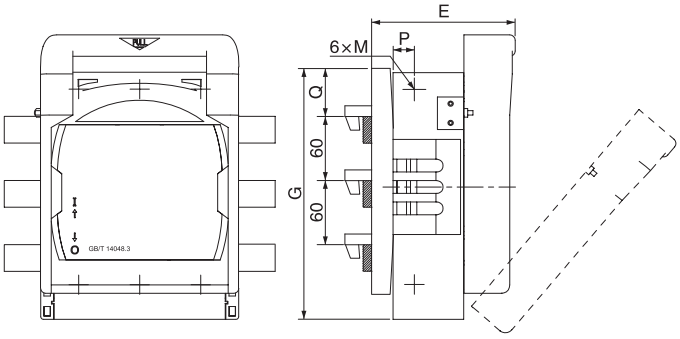

Fig. 2 HR17N/D series busbar type installation and outline dimensions drawing

TGHRT17 Fuse Switch Disconnector

Table 3

Model	E	G	M bolt	Q	P
HR17N/D-250/3D	160	235	M10	69	22
HR17N/D-400/3D	153	264	M10	64	25
HR17N/D-630/3D	153	264	M10	64	25

Note: The busbar type installed product body is same as the fixed type, and the busbar type base is provided on the fixed type product and the same dimensions refer to the fixed type.

7 Product Installation

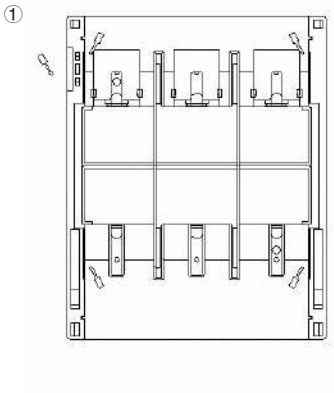

Disassembly of upper and lower protective covers: Insert a small screwdriver into the gap between the protective cover and the base to open the buckle. The upper and lower protective covers are located at four places.

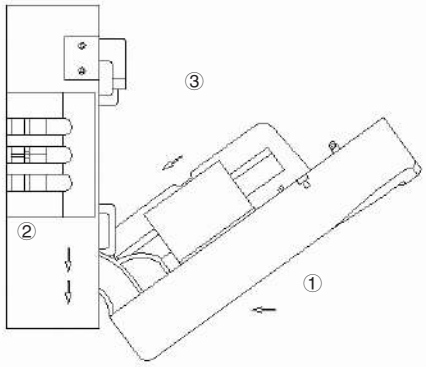

Disassembly of handle and base: When the handle is open in a fan shape, move the handle up to separate the base from the handle;
Installation of handle and base: Insert the handle into the fixed slot on the base, push the handle downwards into the fixed slot on the base, as shown in figures ① and ② ;
Installation of fuse: The fuse can be replaced after the removal of handle, and the assembly direction is shown in Fig. ③ .

8 Ordering Notice

8.1 Please specify the following information when ordering

Please specify the product name, model, rated operating current, the number of poles, whether the micro switch is provided, whether the busbar type base is provided, and the number of switch when ordering.

8.2 Order example: such as HR17N/D-400/30D 400A 100 units.

TGHT17 Switch Disconnector

1 Overview

TGHT17 Switch Disconnector (hereinafter referred to as switch) is primarily used in the power distribution circuit and motor circuit with the rated voltage AC415V/AC690V (50Hz) and with the resistive current up to 630A as a power switch, a switch disconnector, and an emergency switch rather than direct start and stop of motor.

2 Type Designation

TG HT 17 – □ / □ □

- "L" means three phases are power off/on simultaneously
- "S" means three phases are operated independently each other
- Number of poles: 3:3P
- Frame current: 250, 400, 630
- Design code
- Switch disconnector
- Enterprise code

3 Technical Parameters

Product parameter	GHT17 series switch disconnector		
Frame current Ith (A)	250	400	630
Rated insulation voltage Ui (V)	1000		
Rated operating voltage Ue (V)	AC415/690		
Rated impulse withstand voltage Uimp (kV)	12		
Rated operating current Ie (A)	250	400	630
Usage category	AC-22B/AC-21B		
Rated short time withstand current Icw (kA/s)	15		
Rated short circuit making capacity Icm (kA)	30		

4 Operating Conditions

4.1 The upper limit of the ambient air temperature does not exceed +40℃, and the lower limit is not below -5℃.
4.2 The altitude at the installation site does not exceed 2000 meters.
4.3 Humidity: When the maximum temperature is 40℃, the relative humidity of air does not exceed 50%. A higher relative humidity is allowed at low temperatures, such as up to 90% at 20℃. Special measures are taken for condensation occurred occasionally due to temperature changes.
4.4 The Pollution degree of the surrounding environment is Level 3;
4.5 The switch shall be vertically installed in a place where there is no obvious shaking, impact vibration and rain and snow immersion and where there is no explosive danger medium that there is no gas or dust sufficient to cause metal corrosion and damage to the insulation.

5 Structural Features

The switch is composed of a base, a seat, a handle and a protective cover. RT16 series straight copper busbar is installed on the seat, and is directly used as a moving contact blade. The handle is rotating in the fan-shaped mode based on the fulcrum of the base for power off/on the fuse together with the cover, and has a large breaking distance and obvious break point to meet the requirements of the isolation function switch. The base and seat can be easily dismantled to ensure that the seat can be installed on the busbar safely and reliably. There is an arc extinguishing grid on the base to ensure the arc extinguishing and breaking capacity of the switch.

TGHT17 Switch Disconnector

6 Outline and Installation Dimensions

6.1 Outline and installation dimensions when three phases are operated simultaneously

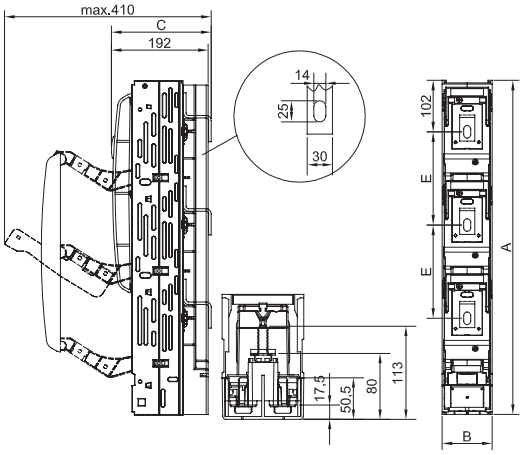

250, 400, and 630 three phases operated simultaneously

6.2 Outline and installation dimensions when three phases are operated independently each other

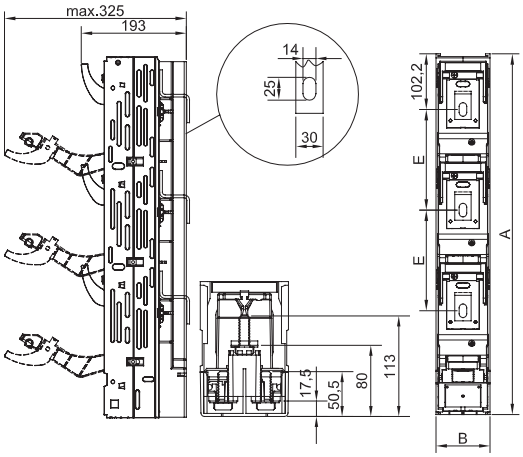

250, 400, 630 three phases operated independently each other

Model	A	B	C	E	M
TGHT17-250、400、630/3L	665	100	198	185	M12
TGHT17-250、400、630/3S	665	100	190	185	M12

7 Ordering Notice

Please specify the model, features, voltage grade, current grade, number of poles, operation method, and quantity of the switch when ordering. For special orders, please contact the company's technical department. For example: TGHT17-250/3L 10 units.

HR17N/D Switch Disconnector

1 Overview

HR17N/D Switch Disconnector (hereinafter referred to as switch) is mainly used in the power distribution circuit and motor circuit with rated voltage AC400V/AC690V (50Hz) and with high short-circuit current with an appointed heating current up to 630A as power switch, isolating switch, and emergency switch for circuit overload and short circuit protection, but cannot be used to directly start or stop the motor.

2 Type Designation

TG HRT 17 - □ / □ □ □

- "L" indicates three phases are operated simultaneously
  "S" indicates three phases are operated separately
- F: Split type of protective cover; with integrated protective cover by default
- Number of poles: 3: 3P
- Frame current: 160A
- Design code.
- Fuse type switch disconnector
- Enterprise code

3 Product Parameters

Table 1

Product	HR17N/D Switch Disconnector			
Appointed heating current Ith(A)	160	250	400	630
Rated insulation voltage Ui(V)	1000			
Rated working voltage Ue (V)	AC690			
Rated impulse withstand voltage Uimp (kV)	12			
Fuse model	RT16Z-00	RT16Z-1	RT16Z-2	RT16Z-3
Rated working current Ie(A)	2、4、6、8、10、16、20、25、32、40、50、63、80、100、125、160	80、100、125、160、200、250	125、160、200、250、315、350、400	315、350、400、500、630
Fuse loss power (W)	12	23	34	48
Usage category	AC-21B			
Rated limited short-circuit current Iq (kA)	50			
Number of poles	3P			

4 Operating Conditions

4.1 The upper limit of the ambient air temperature does not exceed +40℃, and the lower limit is not below -5℃.
4.2 The altitude of the installation site does not exceed 2,000 meters.
4.3 Humidity: The relative air humidity does not exceed 50% at the maximum temperature 40℃, and a higher relevant humidity is allowed at the lower temperature, for example, up to 90% at 20℃. Special measures shall be taken for condensations occurred occasionally due to temperature changes.
4.4 The pollution degree of the ambient environment is 3.
4.5 The switch shall be installed vertically in a place where there is no obvious shaking, impact vibration, and rain and snow erosion, and there is no explosive and dangerous medium at the installation site, and no gas and dust that is sufficient to cause metal corrosion and insulation damage in the medium.

5 Features

The switch is composed of a seat, a base, a cover, a handle, and a protective cover. The NT series of fuse is installed on the base directly instead of the knife switch. The handle can Screw in the sector shape around the pivot of seat to open and close the fuse body together with the cover, and there are larger opening distance and obvious breaking point to meet the isolation functional switch requirements. The seat and base can be dismantled conveniently to ensure that the base can installed on the busbar safely and reliably. There is an arc chute on the seat to ensure the arc extinguishing and breaking capacity of switch.

HR17N/D Switch Disconnector

6 Outline and Installation Dimensions

6.1 Outline and installation dimensions when three phases are operated simultaneously

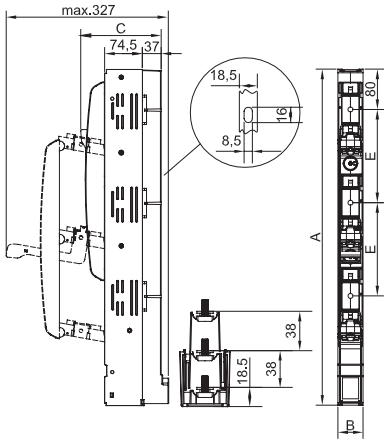

160 three phases are operated simultaneously

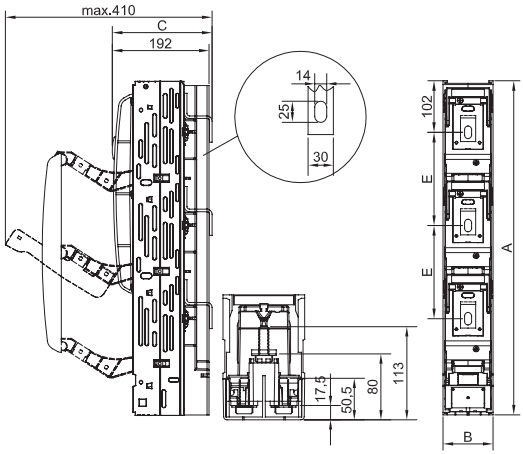

250, 400, and 630 three phases are operated simultaneously

6.2 Outline and installation dimensions when three phases are operated separately

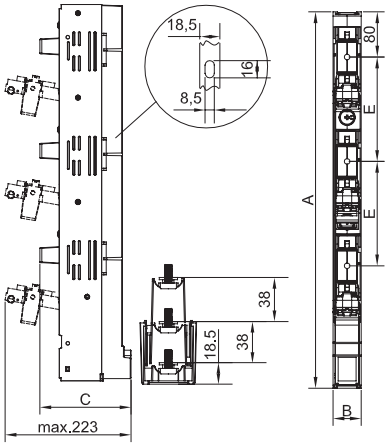

160 three phases are operated separately

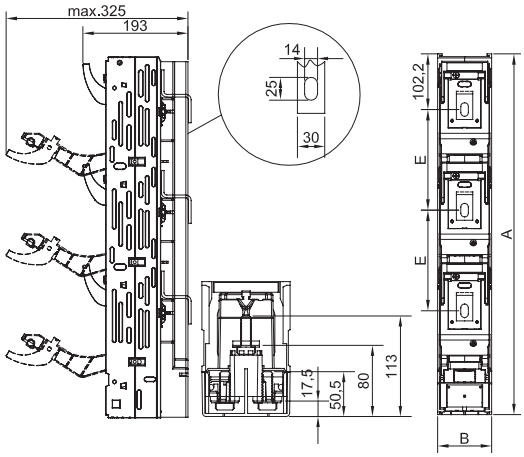

250, 400, and 630 three phases are operated separately

Model	A	B	C	E	M
TGHRT17-160/3L	667	50	160	185	M8
TGHRT17-160/3S	667	50	162	185	M8
TGHRT17-250、400、630/3L	665	100	198	185	M12
TGHRT17-250、400、630/3S	665	100	190	185	M12

7 Ordering Notice

Please specify the type feature, voltage grade, current grade, number of poles, operation method, and quantity of switch when ordering. For special order, please contact our company's technical department.
For example: TGHRT17-250/3L 200A, 10 units.

BH-K Split-core Current Transformer

1 Overview

BH-K series transformer is specially designed for convenient installation in the circuit system or power grid transformation system. It can be installed without disconnecting cable or busbar.

This product is suitable for AC line with rated frequency 50Hz and rated working voltage 0.66kV and below for current and electric energy measurement.

2 Type Designation

BH – □ X □ K

- K: Split-core type
- □: Hole width
- □: Hole length
- BH: Moulded case

3 Technical Parameters

Product model	Current ratio	Rated secondary load (VA)				Number of turns	Outline drawing
		Grade 3.0	Grade 1.0	Grade 0.5	Grade 0.5S		
BH-30*20K	100/5	1.5				1	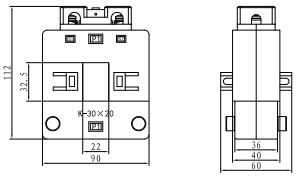
	150/5		1.5			1	
	200/5		2.5	1.5		1	
	250/5		2.5	2.5		1	
	300/5		5	5	2.5	1	
	400/5		5	5	2.5	1	
BH-60*40K	300/5		2.5	1.5		1	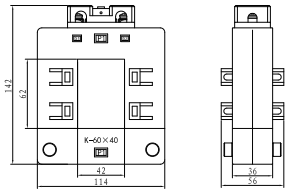
	400/5		2.5	2.5	1.5	1	
	500/5		5	2.5	2.5	1	
	600/5		5	5	2.5	1	
	750/5		5	5	2.5	1	
	800/5		10	5	5	1	
	1000/5		10	10	5	1	
	1200/5		10	10	5	1	
	1500/5		10	10	5	1	
BH-80*50K	600/5		2.5	2.5		1	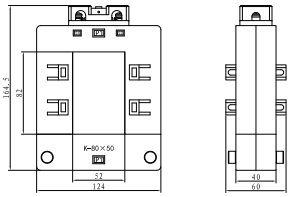
	750/5		5	2.5	2.5	1	
	800/5		10	5	2.5	1	
	1000/5		10	10	5	1	
	1200/5		10	10	5	1	
	1500/5		10	10	5	1	
	2000/5		15	10	10	1	
	2500/5		15	10	10	1	

BH-K Split-core Current Transformer

Continued table

Product model	Current ratio	Rated secondary load (VA)				Number of turns	Outline drawing
		Grade 3.0	Grade 1.0	Grade 0.5	Grade 0.5S		
BH-100*50K	1000/5		10	5	5	1	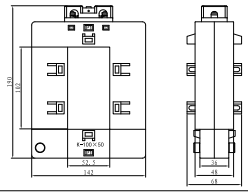
	1200/5		10	5	5	1	
	1500/5		10	10	5	1	
	2000/5		15	10	10	1	
	2500/5		15	10	10	1	
	3000/5		20	10	10	1	
BH-120*80K	1500/5		10	5	5	1	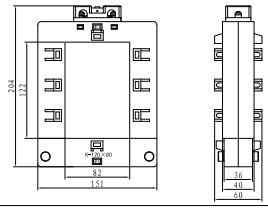
	2000/5		15	10	5	1	
	2500/5		15	10	10	1	
	3000/5		20	10	10	1	
	4000/5		20	10	10	1	
BH-140*60K	1500/5		10	5	5	1	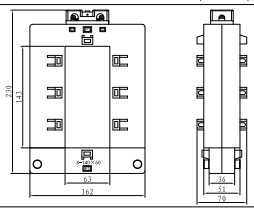
	2000/5		15	10	10	1	
	2500/5		15	10	10	1	
	3000/5		20	15	10	1	
	4000/5		20	15	15	1	
	5000/5		30	20	20	1	
BH-160*80K	2000/5		15	10	10	1	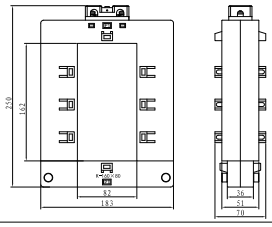
	2500/5		15	10	10	1	
	3000/5		20	15	10	1	
	4000/5		20	15	15	1	
	5000/5		30	20	20	1	

4 Operating Conditions

4.1 Installation site: Indoors.

4.2 Ambient humidity: -5℃-+40℃; daily mean does not exceed +30℃.

4.3 Altitude: Not exceed 1,000 meters.

4.4 Atmospheric conditions: The relative air humidity at the maximum temperature +40℃ does not exceed 50%, and the permissible relative humidity at a lower temperature do not exceed 80%.

4.5 There is no serious dirty in atmospheric air, and gas and there is no enough conductive dust to cause metal corrosion and insulation damage in medium.

4.6 There is no violent vibration and bumps at installation site.

4.7 There is no direct sunlight, rain and snow erosion or severe mildew at the installation site.

BH-0.66 I Type Current Transformer

1 Overview

BH-0.66I series current transformers are suitable for current and electric energy measurement or relay protection in AC lines with a rated frequency of 50Hz and a rated voltage of 0.66kV and below.
The product is a moulded case current transformer that is widely used in complete cabinets. The installation method can adopt the busbar fixing and baseplate fixing installation method. The product can be installed in any direction, and the primary wire can be a busbar or cable.

2 Type Designation

B H – 0.66 □ I

- I — Catagory
- □ — Window width
- 0.66 — Rated voltage (kV)
- H — Current transformer
- B — Closed type

3 Technical Parameters

BH-0.66 Solid

BH-0.66 Solid M8

BH-0.66 Large solid

Current ratio	Rated secondary load (VA)					Number of core-through turns	Outline and installation diagram
	Grade 1.0	Grade 0.5	Grade 0.5s	Grade 0.2	Grade 0.2s		
5/5	5	2.5					BH-0.66 Solid 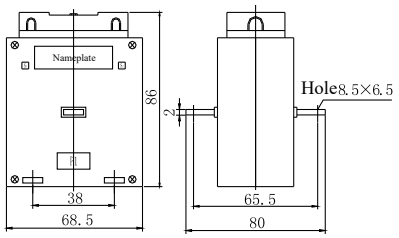
10/5	5	2.5					
15/5	5	2.5					
20/5	5	2.5					
25/5	5	2.5					
30/5	5	2.5					
40/5	5	2.5					
50/5	5	2.5					
75/5	5	2.5					
5/5	5	2.5					BH-0.66 Solid M8 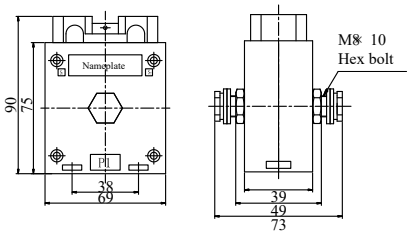
10/5	5	2.5					
15/5	5	2.5					
20/5	5	2.5					
25/5	5	2.5					
30/5	5	2.5					
40/5	5	2.5					
50/5	5	2.5					
75/5	5	2.5					
5/5	5	5	5	5	5		BH-0.66 Large solid 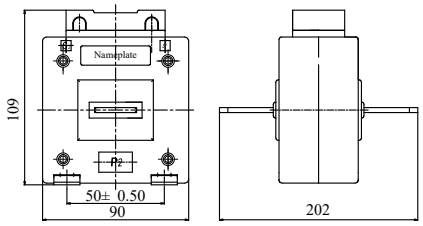
10/5	5	5	5	5	5		
15/5	5	5	5	5	5		
20/5	5	5	5	5	5		
25/5	5	5	5	5	5		
30/5	5	5	5	5	5		
40/5	5	5	5	5	5		
50/5	5	5	5	5	5		
75/5	5	5	5	5	5		

BH-0.66 I Type Current Transformer

BH–0.66 20

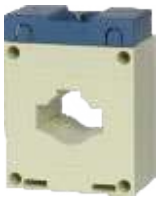

BH–0.66 30

BH–0.66 40

BH–0.66 50

Current ratio	Rated secondary load (VA)					Number of core-through turns	Outline and installation diagram
	Grade 1.0	Grade 0.5	Grade 0.5s	Grade 0.2	Grade 0.2s		
75/5	2.5					1	BH-0.66 20 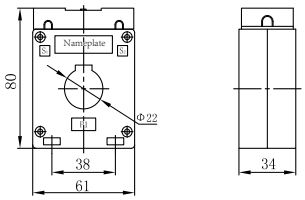
100/5	2.5	2.5				1	
150/5	2.5	2.5				1	
200/5	5	5				1	
250/5	5	5				1	
300/5	5	5				1	
30/5	2.5	2.5				5	BH-0.66 30 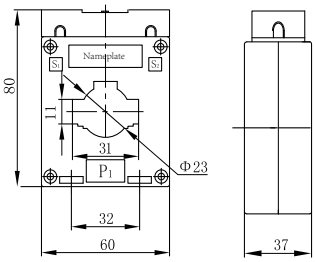
40/5	2.5	2.5				5	
50/5	2.5	2.5				3	
75/5	2.5	2.5				2	
100/5	2.5	2.5				1	
150/5	2.5	2.5				1	
200/5	5	5				1	
250/5	5	5				1	
300/5	5	5				1	
400/5	5	5				1	
150/5	2.5	2.5	2.5	2.5	2.5	1	BH-0.66 40 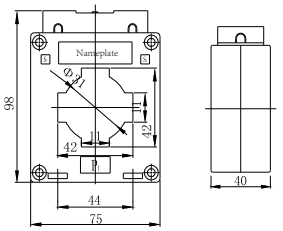
200/5	5	5	5	5	5	1	
250/5	5	5	5	5	5	1	
300/5	5	5	5	5	5	1	
400/5	5	5	5	5	5	1	
500/5	5	5	5	5	5	1	
600/5	5	5	5	5	5	1	
200/5	5	5	2.5	2.5	2.5	1	BH-0.66 50 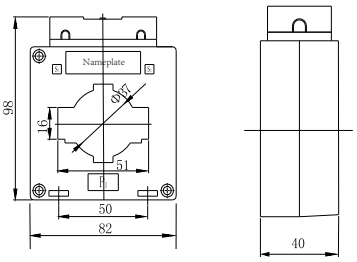
250/5	5	5	5	5	5	1	
300/5	5	5	5	5	5	1	
400/5	5	5	5	5	5	1	
500/5	5	5	5	5	5	1	
600/5	5	5	5	5	5	1	
750/5	10	10	10	10	10	1	
800/5	10	10	10	10	10	1	

BH-0.66 I Type Current Transformer

BH-0.66 60

BH-0.66 80

BH-0.66 100

BH-0.66 120

Current ratio	Rated secondary load (VA)					Number of core-through turns	Outline and installation diagram
	Grade 1.0	Grade 0.5	Grade 0.5s	Grade 0.2	Grade 0.2s		
200/5	5	2.5				1	BH-0.66 60 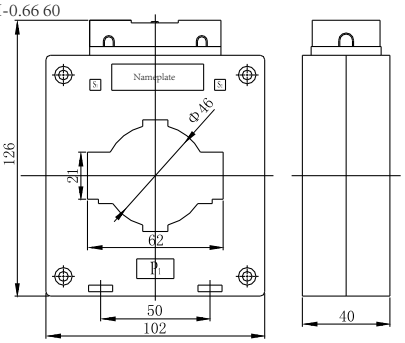
250/5	5	5				1	
300/5	5	5	5	5	5	1	
400/5	5	5	5	5	5	1	
500/5	5	5	5	5	5	1	
600/5	5	5	5	5	5	1	
750/5	10	10	10	10	10	1	
800/5	10	10	10	10	10	1	
1000/5	10	10	10	10	10	1	
1200/5	10	10	10	10	10	1	
1500/5	10	10	10	10	10	1	
300/5	5	5				1	BH-0.66 80 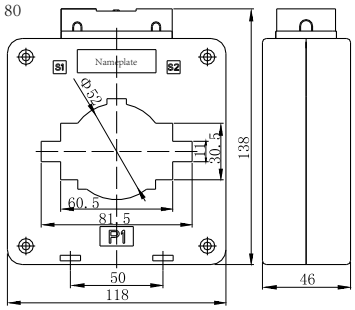
400/5	5	5	5	5	5	1	
500/5	5	5	5	5	5	1	
600/5	5	5	5	5	5	1	
750/5	10	10	10	10	10	1	
800/5	10	10	10	10	10	1	
1000/5	10	10	10	10	10	1	
1200/5	10	10	10	10	10	1	
1500/5	10	10	10	10	10	1	
2000/5	20	20	20	20	20	1	
600/5	5	5	5	5	5	1	BH-0.66 100 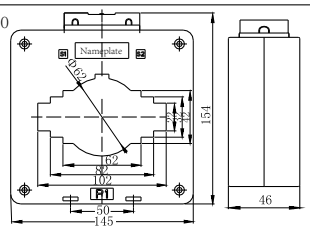
750/5	10	10	10	10	10	1	
800/5	10	10	10	10	10	1	
1000/5	10	10	10	10	10	1	
1500/5	10	10	10	10	10	1	
2000/5	20	20	20	20	20	1	
2500/5	20	20	20	20	20	1	
800/5	10	10				1	BH-0.66 120 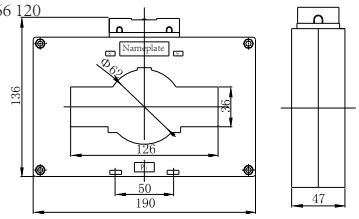
1000/5	10	10	10	10	10	1	
1500/5	10	10	10	10	10	1	
2000/5	10	10	10	10	20	1	
2500/5	20	20	20	20	20	1	
3000/5	20	20	20	20	20	1	
4000/5	30	30	30	30	30	1	

4 Operating Conditions

4.1 Installation site: indoors.
4.2 Ambient temperature: -5ºC to +40ºC; the mean daily temperature does not exceed +30ºC.
4.3 Altitude: Not exceed 1,000 meters.
4.4 Atmosphere conditions: When the maximum temperature is +40ºC, the relative humidity of air does not exceed 50%, and the allowable relative humidity at the lower temperature does not exceed 80%.
4.5 There is no serious dirt in atmosphere and no gas and conductive dust that may cause corrosion to metal and damage to the insulation in medium.
4.6 The installation site shall be free of severe vibration and bump.
4.7 The installation site is not directly under the sun radiation without rain and snow erosion and serious mold.

BH(SDH)-0.66 II Type Current Transformer

1 Overview

BH(SDH)-0.66II series current transformers are suitable for current and electric energy measurement or relay protection in AC lines with rated frequency of 50Hz and rated voltage of 0.66kV and below. The product is a moulded case current transformer that is widely used in complete cabinets. The installation method can adopt the busbar fixing and baseplate fixing installation method. The product can be installed in any direction, and the primary wire can be a busbar or cable.

2 Type Designation

SD H – 0.66 □ II

- II — Catagory
- □ — Window width
- 0.66 — Rated voltage (kV)
- H — Current transformer
- SD — CGS low-voltage drawer-type switch cabinet

3 Technical Parameters

BH(SDH)–0.66 30

BH(SDH)–0.66 40

BH(SDH)–0.66 50

Current ratio	Rated secondary load (VA)					Number of core-through turns	Outline and installation diagram
	Grade 1.0	Grade 0.5	Grade 0.5s	Grade 0.2	Grade 0.2s		
50/5	5	2.5				1	BH(SDH)-0.66 30 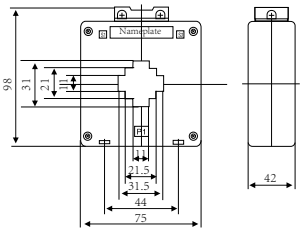
75/5	5	2.5	2.5	2.5	2.5	1	
100/5	5	5	2.5	2.5	2.5	1	
150/5	5	5	2.5	2.5	2.5	1	
200/5	5	5	5	5	5	1	
250/5	5	5	5	5	5	1	
300/5	5	5	5	5	5	1	
400/5	5	5	5	5	5	1	
150/5	5	2.5	2.5	2.5	2.5	1	BH(SDH)-0.66 40 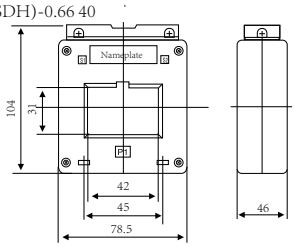
200/5	5	5	5	5	5	1	
250/5	5	5	5	5	5	1	
300/5	5	5	5	5	5	1	
400/5	5	5	5	5	5	1	
500/5	5	5	5	5	5	1	
600/5	5	5	5	5	5	1	
200/5	5	5	2.5	2.5	2.5	1	BH(SDH)-0.66 50 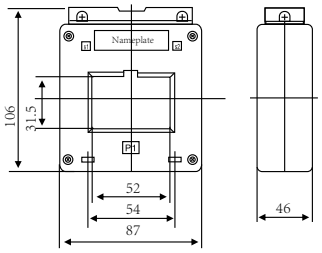
250/5	5	5	5	5	5	1	
300/5	5	5	5	5	5	1	
400/5	5	5	5	5	5	1	
500/5	5	5	5	5	5	1	
600/5	5	5	5	5	5	1	
750/5	10	10	10	10	10	1	
800/5	10	10	10	10	10	1	

BH(SDH)-0.66 II Type Current Transformer

BH(SDH)-0.66 60

BH(SDH)-0.66 80

BH(SDH)-0.66 100

BH(SDH)-0.66 120

BH(SDH)-0.66 130

Current ratio	Rated secondary load (VA)					Number of core-through turns	Outline and installation diagram
	Grade 1.0	Grade 0.5	Grade 0.5s	Grade 0.2	Grade 0.2s		
400/5	5	5	5	5	5	1	BH(SDH)-0.66 60 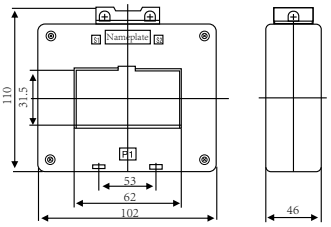
500/5	5	5	5	5	5	1	
600/5	5	5	5	5	5	1	
750/5	10	10	10	10	10	1	
800/5	10	10	10	10	10	1	
1000/5	10	10	10	10	10	1	
1200/5	10	10	10	10	10	1	
1500/5	10	10	10	10	10	1	
600/5	5	5	5	5	5	1	BH(SDH)-0.66 80 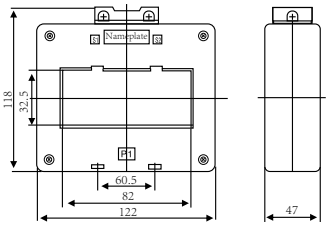
750/5	10	10	10	10	10	1	
800/5	10	10	10	10	10	1	
1000/5	10	10	10	10	10	1	
1200/5	10	10	10	10	10	1	
1500/5	10	10	10	10	10	1	
2000/5	20	20	20	20	20	1	
750/5	10	10	10	10	10	1	BH(SDH)-0.66 100 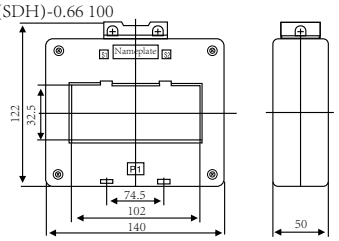
800/5	10	10	10	10	10	1	
1000/5	10	10	10	10	10	1	
1200/5	10	10	10	10	10	1	
1500/5	10	10	10	10	10	1	
2000/5	20	20	20	20	20	1	
2500/5	20	20	20	20	20	1	
1000/5	10	10	10	10	10	1	BH(SDH)-0.66 120 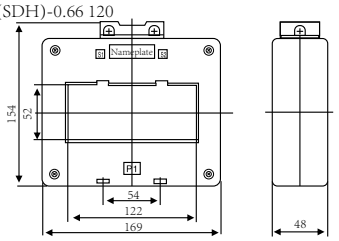
1200/5	10	10	10	10	10	1	
1500/5	20	20	20	20	20	1	
2000/5	20	20	20	20	20	1	
2500/5	20	20	20	20	20	1	
3000/5	20	20	20	20	20	1	
4000/5	30	30	30	30	30	1	
800/5	10	5				1	BH(SDH)-0.66 130 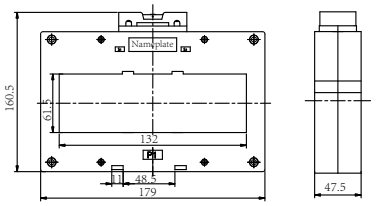
1000/5	10	5	5	5	5	1	
1200/5	10	10	10	10	10	1	
1500/5	10	10	10	10	10	1	
2000/5	20	20	20	20	20	1	
2500/5	20	20	20	20	20	1	
3000/5	20	20	20	20	20	1	
4000/5	30	30	30	30	30	1	
5000/5	30	30	30	30	30	1	

BH(SDH)-0.66 II Type Current Transformer

BH(SDH)–0.66 150

BH(SDH)–0.66 180

BH(SDH)–0.66 200

BH(SDH)–0.66 220

BH(SDH)–0.66 260

Current ratio	Rated secondary load (VA)					Number of core-through turns	Outline and installation diagram
	Grade 1.0	Grade 0.5	Grade 0.5s	Grade 0.2	Grade 0.2s		
1000/5	10	10	10	10	10	1	BH(SDH)-0.66 150 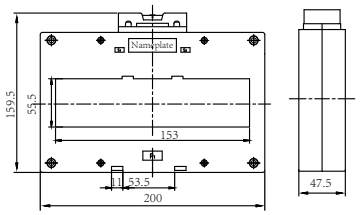
1200/5	10	10	10	10	10	1	
1500/5	10	10	10	10	10	1	
2500/5	20	20	20	20	20	1	
3000/5	20	20	20	20	20	1	
4000/5	30	30	30	30	30	1	
5000/5	30	30	30	30	30	1	
1500/5	10	10	10	10	10	1	BH(SDH)-0.66 180 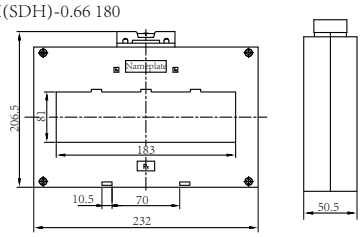
2000/5	20	20	20	20	20	1	
2500/5	20	20	20	20	20	1	
3000/5	20	20	20	20	20	1	
4000/5	30	30	30	30	30	1	
5000/5	30	30	30	30	30	1	
2000/5	20	20	20	20	20	1	BH(SDH)-0.66 200 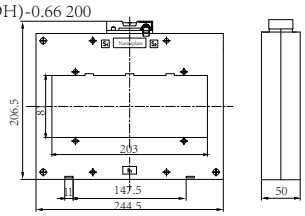
2500/5	20	20	20	20	20	1	
3000/5	20	20	20	20	20	1	
4000/5	30	30	30	30	30	1	
5000/5	30	30	30	30	30	1	
2000/5	20	20	20	20	20	1	BH(SDH)-0.66 220 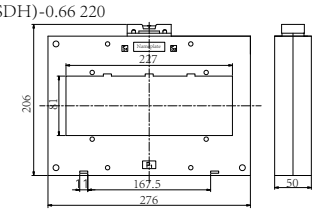
2500/5	20	20	20	20	20	1	
3000/5	20	20	20	20	20	1	
4000/5	30	30	30	30	30	1	
5000/5	30	30	30	30	30	1	
2000/5	20	20	20	20	20	1	BH(SDH)-0.66 260 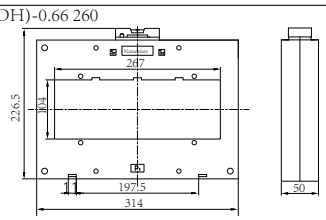
2500/5	20	20	20	20	20	1	
3000/5	20	20	20	20	20	1	
4000/5	30	30	30	30	30	1	
5000/5	30	30	30	30	30	1	

4 Operating Conditions

4.1 Installation site: indoors.
4.2 Ambient temperature: -5ºC to +40ºC; the mean daily temperature does not exceed +30ºC.
4.3 Altitude: Not exceed 1,000 meters.
4.4 Atmosphere conditions: When the maximum temperature is +40ºC, the relative humidity of air does not exceed 50%, and the allowable relative humidity at the lower temperature does not exceed 80%.
4.5 There is no serious dirt in atmosphere and no gas and conductive dust that may cause corrosion to metal and damage to the insulation in medium.
4.6 The installation site shall be free of severe vibration and bump.
4.7 The installation site is not directly under the sun radiation without rain and snow erosion and serious mold.

BH(SDH)-0.66 II Type Current Transformer

5 Outline and Installation Dimensions of Accessories

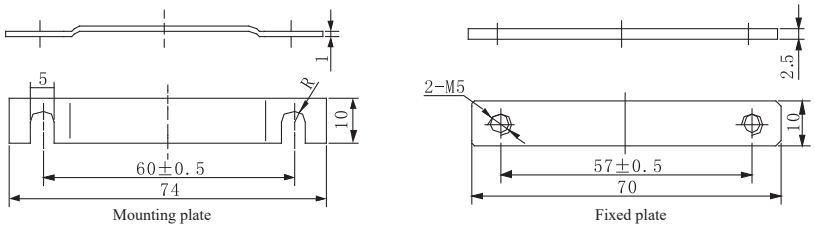

Outline and installation dimensions of accessories for BH-0.66, BH(SDH)-0.66 30-60 type

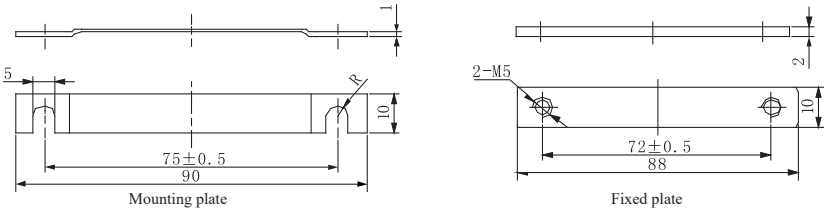

Outline and installation dimensions of accessories for BH-0.66, BH(SDH)-0.66 80 type

6 Current Transformer Installation Diagram

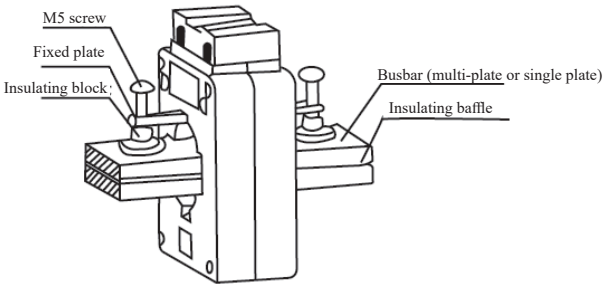

Busbar fixed type

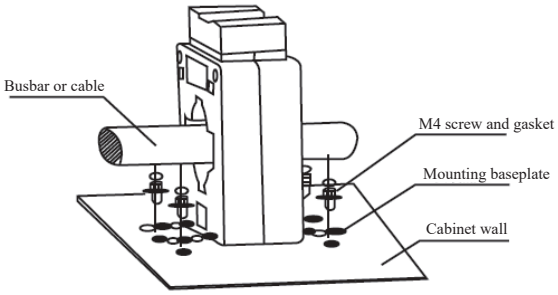

Baseplate mounted type

7 Ordering Notice

1. Please specify the product model, window width, current ratio, rated output and corresponding accuracy level when ordering.
   For example: To order BH(SDH)-0.66 type transformer system with a window width of 40mm, a rated current ratio of 200/5A, a rated output of 5VA, and with an accuracy level 0.2, the ordering information is described as follows: BH(SDH)-0.66 40 200/5 Level 0.2.
2. The load not marked in the system refers to the parameter in the table by default, and the grade not marked in the system is Grade 5 by default.
3. Please specify other requirements in the contract if any.

BH-0.66 III Type Current Transformer

1 Overview

The BH-0.66 III type current transformer is mainly used indoors for current, electric energy measurem or relay protection in AC 50Hz lines with a rated voltage of 0.66kV. The product is a moulded case current transformer, and widely used in complete cabinets. The installation method can adopt the busbar fixing and baseplate fixing installation method.

2 Type Designation

B H – 0.66 □ III

- III — Catagory
- □ — Window width
- 0.66 — Rated voltage (kV)
- H — Current transformer
- B — Closed type

3 Technical Parameters

BH–0.66 30III

BH–0.66 40III

Current ratio	Rated secondary load (VA)					Number of core-through turns	Outline and installation diagram
	Grade 1.0	Grade 0.5	Grade 0.5s	Grade 0.2	Grade 0.2s		
100/5	2.5					1	BH-0.66 30III 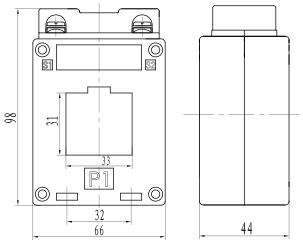
150/5	2.5	2.5				1	
200/5	5	5	2.5	2.5	2.5	1	
250/5	5	5	5	5	5	1	
300/5	5	5	5	5	5	1	
400/5	5	5	5	5	5	1	
500/5	5	5	5	5	5	1	
600/5	5	5	5	5	5	1	
150/5	2.5	2.5	2.5	2.5	2.5	1	BH-0.66 40III 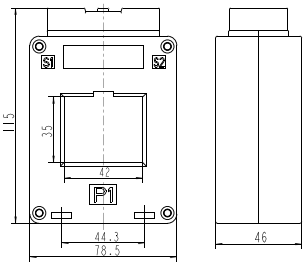
200/5	5	5	5	5	5	1	
250/5	5	5	5	5	5	1	
300/5	5	5	5	5	5	1	
400/5	5	5	5	5	5	1	
500/5	5	5	5	5	5	1	
600/5	5	5	5	5	5	1	
750/5	10	10	10	10	10	1	
800/5	10	10	10	10	10	1	
1000/5	10	10	10	10	10	1	

BH-0.66 III Type Current Transformer

BH-0.66 50III

BH-0.66 60III

BH-0.66 80III

BH-0.66 100III

BH-0.66 125III

Current ratio	Rated secondary load (VA)					Number of core-through turns	Outline and installation diagram
	Grade 1.0	Grade 0.5	Grade 0.5s	Grade 0.2	Grade 0.2s		
300/5	5	5	5	5	5	1	BH-0.66 50III 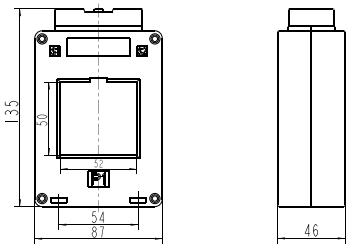
400/5	5	5	5	5	5	1	
500/5	5	5	5	5	5	1	
600/5	5	5	5	5	5	1	
750/5	10	10	10	10	10	1	
800/5	10	10	10	10	10	1	
1000/5	10	10	10	10	10	1	
1200/5	10	10	10	10	10	1	
1500/5	10	10	10	10	10	1	
500/5	5	5	5	5	5	1	BH-0.66 60III 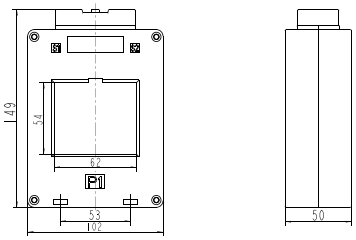
600/5	5	5	5	5	5	1	
750/5	10	10	10	10	10	1	
800/5	10	10	10	10	10	1	
1000/5	10	10	10	10	10	1	
1200/5	10	10	10	10	10	1	
1500/5	10	10	10	10	10	1	
2000/5	20	20	20	20	20	1	
2500/5	20	20	20	20	20	1	
500/5	5	5				1	BH-0.66 80III 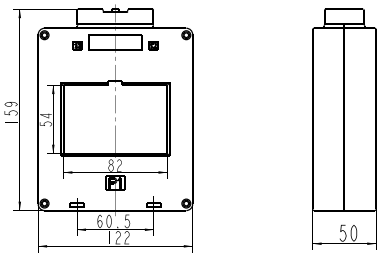
600/5	5	5	5	5	5	1	
750/5	10	10	10	10	10	1	
800/5	10	10	10	10	10	1	
1000/5	10	10	10	10	10	1	
1200/5	10	10	10	10	10	1	
1500/5	10	10	10	10	10	1	
2000/5	20	20	20	20	20	1	
2500/5	20	20	20	20	20	1	
3000/5	20	20	20	20	20	1	
800/5	10	10	10	10	10	1	BH-0.66 100III 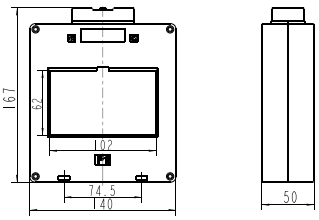
1000/5	10	10	10	10	10	1	
1200/5	10	10	10	10	10	1	
1500/5	10	10	10	10	10	1	
2000/5	20	20	20	20	20	1	
2500/5	20	20	20	20	20	1	
3000/5	20	20	20	20	20	1	
4000/5	30	30	30	30	30	1	
1000/5	10	10	5	5	5	1	BH-0.66 125III 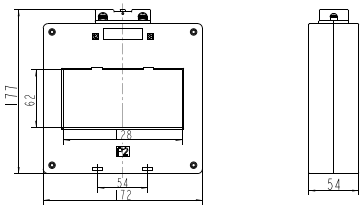
1200/5	10	10	10	10	10	1	
1500/5	10	10	10	10	10	1	
2000/5	20	20	20	20	20	1	
2500/5	20	20	20	20	20	1	
3000/5	20	20	20	20	20	1	
4000/5	30	30	30	30	30	1	
5000/5	30	30	30	30	30	1	

BH-0.66 III Type Current Transformer

4 Operating Conditions

4.1 Installation site: indoors.

4.2 Ambient temperature: -5ºC to +40ºC; the mean daily temperature does not exceed +30ºC.

4.3 Altitude: Not exceed 1,000 meters.

4.4 Atmosphere conditions: When the maximum temperature is +40ºC, the relative humidity of air does not exceed 50%, and the allowable relative humidity at the lower temperature does not exceed 80%.

4.5 There is no serious dirt in atmosphere and no gas and conductive dust that may cause corrosion to metal and damage to the insulation in medium.

4.6 The installation site shall be free of severe vibration and bump.

4.7 The installation site is not directly under the sun radiation without rain and snow erosion and serious mold.

5 Ordering Notice

1. Please specify the product model, window width, current ratio, rated output and corresponding accuracy level when ordering.
   For example: To order BH-0.66 III type transformer system with a window width of 60mm, a rated current ratio of 600/5A, a rated output of 5VA, and with an accuracy level 0.2, the ordering information is described as follows: BH-0.66 60III 600/5 Level 0.2.
2. The load not marked in the system refers to the parameter in the table by default, and the grade not marked in the system is Grade 5 by default.
3. Please specify other requirements in the contract if any.

LMZJ1-0.5 Current Transformer

1 Overview

LMZJ1-0.5 series current transformer is suitable for the AC line with rated frequency 50Hz and rated voltage 0.5kAV and below for current and electric energy measurement or for relay protection. The product is the cast type current transformer, and is installed and fixed using a base plate.

2 Type Designation

L M Z J 1 – 0.5

- 0.5 — Rated voltage (kV)
- 1 — Design code
- J — Extended capacity
- Z — Casting insulation
- M — Busbar type
- L — Current transformer

3 Technical Parameters

Current ratio	Rated secondary load (VA)				Number of turns	Figure	Outline and installation dimensions
	Grade 0.5	Grade 0.5S	Grade 0.2	Grade 0.2S			
5/5	5	5	5	5	30	Fig. 2	LMZJ1-0.5 30 model
10/5	5	5	5	5	15	Fig. 2	
15/5	5	5	5	5	10	Fig. 2	
20/5	5	5	5	5	10	Fig. 2	
25/5	5	5	5	5	6	Fig. 2	
30/5	5	5	5	5	5	Fig. 2	
40/5	5	5	5	5	5	Fig. 2	
50/5	5	5			1	Fig. 4	
50/5	5	5	5	5	2	Fig. 3	
75/5	5	5	5	5	1	Fig. 3	
75/5	5	5	5	5	2	Fig. 3	
100/5	5	5	5	5	1	Fig. 3	
100/5	5	5	5	5	2	Fig. 2	
150/5	5	5	5	5	1	Fig. 2	
200/5	5	5	5	5	1	Fig. 2	
250/5	5	5	5	5	1	Fig. 2	
300/5	5	5	5	5	1	Fig. 2	

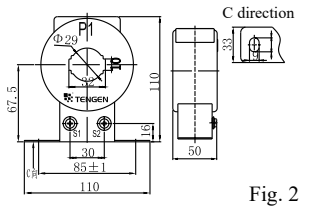

Fig. 2

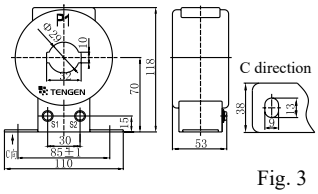

Fig. 3

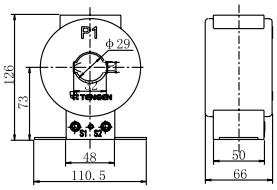

Fig. 4

LMZJ1-0.5 Current Transformer

Current ratio	Rated secondary load (VA)				Number of turns	Figure	Outline and installation dimensions
	Grade 0.5	Grade 0.5S	Grade 0.2	Grade 0.2S			
300/5	5	5	5	5	1	Fig.5	LMZJ1-0.5 50 type Fig. 5 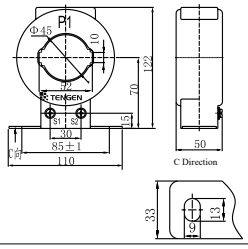
400/5	5	5	5	5	1	Fig.5	
500/5	5	5	5	5	1	Fig.5	
600/5	5	5	5	5	1	Fig.5	
300/5	5				1	Fig.6	LMZJ1-0.5 60 type 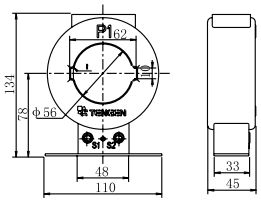 Fig. 6
400/5	5	5	5	5	1	Fig.6	
500/5	5	5	5	5	1	Fig.6	
600/5	5	5	5	5	1	Fig.6	
750/5	10	10	10	10	1	Fig.6	
800/5	10	10	10	10	1	Fig.6	
1000/5	10	10	10	10	1	Fig.6	
600/5	5	5	5	5	1	Fig.7	LMZJ1-0.5 80 type 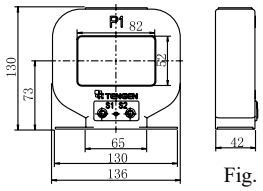 Fig. 7
750/5	5	5	5	5	1	Fig.7	
800/5	5	5	5	5	1	Fig.7	
1000/5	5	5	5	5	1	Fig.7	
1200/5	5	5	5	5	1	Fig.7	
1500/5	5	5	5	5	1	Fig.7	
750/5	10	10	10	10	1	Fig.8	LMZJ1-0.5 100 type 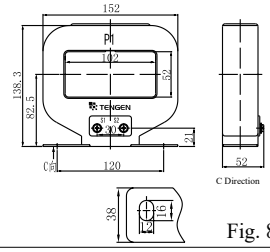 Fig. 8
800/5	10	10	10	10	1	Fig.8	
1000/5	10	10	10	10	1	Fig.8	
1200/5	10	10	10	10	1	Fig.8	
1500/5	10	10	10	10	1	Fig.8	
2000/5	20	20	20	20	1	Fig.9	LMZJ1-0.5 130 type 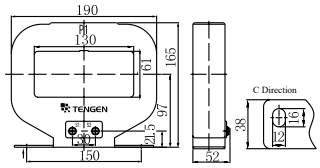 Fig. 9
2500/5	20	20	20	20	1	Fig.8	
3000/5	20	20	20	20	1	Fig.8	
4000/5	30	30	30	30	1	Fig.10	LMZJ1-0.5 180 type 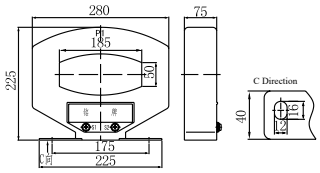 Fig. 10
5000/5	30	30	30	30	1	Fig.10	
6000/5	30	30	30	30	1	Fig.10	

LMZJ1-0.5 Current Transformer

Current ratio	Rated secondary load (VA)				Number of turns	Figure	Outline and installation dimensions
	Grade 0.5	Grade 0.5S	Grade 0.2	Grade 0.2S			
100/5	5	5	5	5	1	Fig.11	LMZJ1-0.5 45 type customized 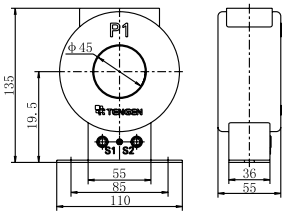 Fig.11
150/5	5	5	5	5	1	Fig.11	
200/5	5	5	5	5	1	Fig.11	
250/5	5	5	5	5	1	Fig.11	
300/5	5	5	5	5	1	Fig.11	
400/5	5	5	5	5	1	Fig.11	
500/5	5	5	5	5	1	Fig.11	
600/5	5	5	5	5	1	Fig.11	
200/5	5	5	5	5	1	Fig.12	LMZJ1-0.5 55 type customized 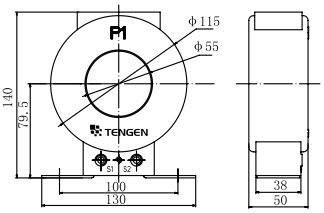 Fig.12
300/5	5	5	5	5	1	Fig.12	
400/5	5	5	5	5	1	Fig.12	
500/5	5	5	5	5	1	Fig.12	
600/5	5	5	5	5	1	Fig.12	
750/5	10	10	10	10	1	Fig.12	
800/5	10	10	10	10	1	Fig.12	
1000/5	10	10	10	10	1	Fig.12	
1200/5	10	10	10	10	1	Fig.12	
1500/5	10	10	10	10	1	Fig.12	

4 Operating Conditions

4.1 Ambient temperature: -5℃-+40℃; the daily mean does not exceed +30℃。
4.2 Altitude: Not exceed 1000m.
4.3 Atmospheric conditions: The relative air humidity does not exceed 50% at the maximum temperature +40℃. The allowable relative humidity does not exceed 80% at a low temperature.
4.4 There is no severe dirt in the atmospheric air, and there is no enough gas and conductive dust to cause metal corrosion and insulation damage in the medium.
4.5 There is no severe vibrations and bumps at the installation site.
4.6 The installation site is not subject to direct sunlight without rain and snow erosion or severe mildew.

5 Ordering Notice

Please specify the model, current ratio, rated output, and corresponding accuracy of product when ordering. Other requirements shall be indicated in the contact.

LMZJ1-0.66 Current Transformer

1 Overview

LMZJ1-0.66 series current transformer is primarily used in the AC line with rated frequency 50Hz and rated voltage 0.66kV and below for current and electric energy measurement or relay protection in the indoor environment. The product is a cast type current transformer that is installed in the busbar fixed way.

2 Type Designation

L M Z J 1 – 0.66

- 0.66: Rated voltage (kV)
- 1: Design code
- J: Extended capacity
- Z: Casting insulation
- M: Busbar type
- L: Current transformer

3 Technical Parameters

Current ratio	Rated secondary load (VA)				Number of turns	Figure	Outline and installation dimensions
	Grade 0.5	Grade 0.5S	Grade 0.2	Grade 0.2S			
100/5	2.5	2.5	2.5	2.5	1	Fig. 1	LMZJ1-0.66 30 type 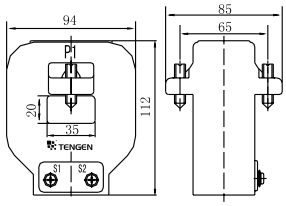 Fig. 1
150/5	5	5	5	5	1	Fig. 1	
200/5	5	5	5	5	1	Fig. 1	
250/5	5	5	5	5	1	Fig. 1	
300/5	5	5	5	5	1	Fig. 1	
150/5	5				1	Fig. 2	LMZJ1-0.66 40 type 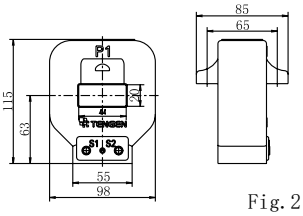 Fig. 2
200/5	5	5	5	5	1	Fig. 2	
250/5	5	5	5	5	1	Fig. 2	
300/5	5	5	5	5	1	Fig. 2	
400/5	5	5	5	5	1	Fig. 2	
500/5	5	5	5	5	1	Fig. 2	
600/5	5	5	5	5	1	Fig. 2	
300/5	5	5	5	5	1	Fig. 3	LMZJ1-0.66 50 type 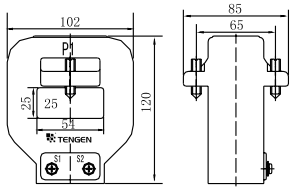 Fig. 3
400/5	5	5	5	5	1	Fig. 3	
500/5	5	5	5	5	1	Fig. 3	
600/5	5	5	5	5	1	Fig. 3	

LMZJ1-0.66 Current Transformer

Current ratio	Rated secondary load (VA)				Number of turns	Figure	Outline and installation dimensions
	Grade 0.5	Grade 0.5S	Grade 0.2	Grade 0.2S			
300/5	5	5	5	5	1	Fig. 4	LMZJ1-0.66 60 type 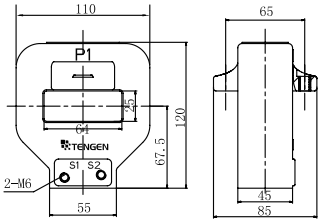 Fig. 4
400/5	5	5	5	5	1	Fig. 4	
500/5	5	5	5	5	1	Fig. 4	
600/5	5	5	5	5	1	Fig. 4	
750/5	10	10	10	10	10	Fig. 4	
800/5	10	10	10	10	10	Fig. 4	
1000/5	10	10	10	10	10	Fig. 4	
1200/5	10	10	10	10	10	Fig. 4	
1500/5	10	10	10	10	10	Fig. 4	
500/5	5	5	5	5	1	Fig. 5	LMZJ1-0.66 80 type 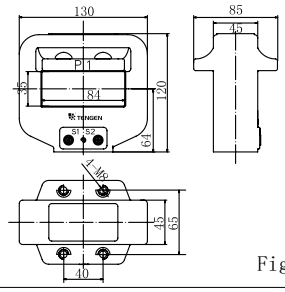 Fig. 5
600/5	5	5	5	5	1	Fig. 5	
750/5	10	10	10	10	1	Fig. 5	
800/5	10	10	10	10	1	Fig. 5	
1000/5	10	10	10	10	1	Fig. 5	
1200/5	10	10	10	10	1	Fig. 5	
1500/5	10	10	10	10	1	Fig. 5	
2000/5	10	10	10	10	1	Fig. 5	
750/5	10	10	10	10	1	Fig. 6	LMZJ1-0.66 100 type 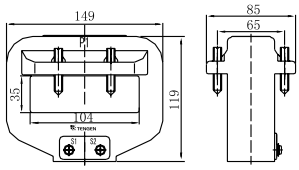 Fig. 6
800/5	10	10	10	10	1	Fig. 6	
1000/5	10	10	10	10	1	Fig. 6	
1200/5	10	10	10	10	1	Fig. 6	
1500/5	10	10	10	10	1	Fig. 6	
1500/5	10	10	10	10	1	Fig. 7	LMZJ1-0.66 130 type 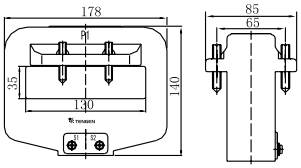 Fig. 7
2000/5	20	20	20	20	20	Fig. 7	
2500/5	20	20	20	20	20	Fig. 7	
3000/5	20	20	20	20	20	Fig. 7	
600/5	5				1	Fig. 8	LMZJ1-0.66 80×50 type 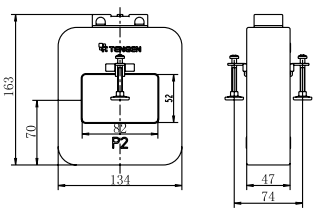 Fig. 8
750/5	5	5	5	5	1	Fig. 8	
800/5	5	5	5	5	1	Fig. 8	
1000/5	10	10	10	10	1	Fig. 8	
1200/5	10	10	10	10	1	Fig. 8	
1500/5	10	10	10	10	1	Fig. 8	

LMZJ1-0.66 Current Transformer

Current ratio	Rated secondary load (VA)				Number of turns	Figure	Outline and installation dimensions
	Grade 0.5	Grade 0.5S	Grade 0.2	Grade 0.2S			
800/5	5				1	Fig. 9	LMZJ1-0.66 100×50 type 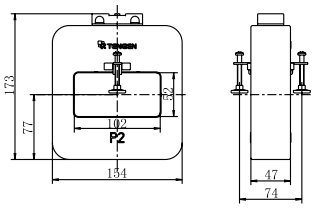 Fig. 9
1000/5	10	10	10	10	1	Fig. 9	
1200/5	10	10	10	10	1	Fig. 9	
1500/5	10	10	10	10	1	Fig. 9	
2000/5	20	20	20	20	1	Fig. 9	
1500/5	10	10	10	10	1	Fig. 10	LMZJ1-0.66 130×60 type 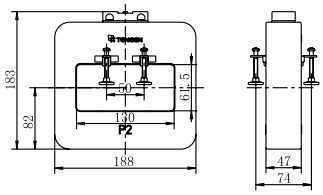 Fig. 10
2000/5	20	20	20	20	1	Fig. 10	
2500/5	20	20	20	20	1	Fig. 10	
3000/5	20	20	20	20	1	Fig. 10	
4000/5	30	30	30	30	1	Fig. 10	
5000/5	30	30	30	30	1	Fig. 10	

4 Operating Conditions

4.1 Ambient temperature: -5℃-+40℃; the daily mean does not exceed +30℃。
4.2 Altitude: Not exceed 1000m.
4.3 Atmospheric conditions: The relative air humidity does not exceed 50% at the maximum temperature +40℃. The allowable relative humidity does not exceed 80% at a low temperature.
4.4 There is no severe dirt in the atmospheric air, and there is no enough gas and conductive dust to cause metal corrosion and insulation damage in the medium.
4.5 There is no severe vibrations and bumps at the installation site.
4.6 The installation site is not subject to direct sunlight without rain and snow erosion or severe mildew.

5 Ordering Notice

Please specify the model, current ratio, rated output, and corresponding accuracy of product when ordering. Other requirements shall be indicated in the contact.

TND, TDS Series Voltage Stabilizer

1 Overview

TND, TDS Series Voltage Stabilizerconsists of a contact-type voltage regulator and an automatic control circuit. After sampling and amplifying the output voltage, the servo motor is controlled to drive the electric brush components Screw in the required direction on the annular voltage regulating coil friction surface allowing the output voltage is adjusted to the rated value for obtaining stable voltage.
The product can be widely used in power supplies of many electrical equipment and facilities such as office equipment, debugging instrument, communication system, industrial equipment, medical equipment, and household appliances.

2 Type Designation

T N □ – □

- Rated capacity (VA or kVA)
- Number of phases: D: single-phase S: three-phase
- Automatic AC voltage stabilizer

3 Technical Parameters

Number of phases	Single-phase	Three-phase
Specifications	0.5k, 1k, 1.5k, 2k, 3k, 5k 7.5k, 10k, 15k, 20k, 30k	1.5k, 3k, 4.5k, 6k, 9k, 15k, 20k, 30k, 40k, 50k, 60k, 75k
Input voltage	160V ~ 250V	280V ~ 430V
Output voltage	220V±3% (110V±3% for 3kVA and below)	380±3%
Output overvoltage protection	246±4V (No overvoltage protection for 1.5kVA and below and 110V output)	430±7V (No overvoltage protection for TNS-4.5kVA and below)
Voltage regulating speed	> 10V per second	
Rated working frequency	50Hz	
Frequency	> 90%	

4 Operating Conditions

4.1 Ambient environment: -5°C~+40°C (suitable for indoors type)
4.2 Relative humidity: Not greater than 90% (at temperature +25°C)
4.3 Installation site: The altitude does not exceed 1,000 meters.
4.4 Working environment: Installed in the ventilated and dry room free of direct sun radiation, corrosive medium and flammable and explosive gas.
4.5 Used indoors; output cannot be used in parallel.
4.6 Special use conditions shall be agreed and determined by the client and our company.

5 Features

This series of product feature with good waveform, smooth voltage regulation, high output voltage accuracy, wide input voltage range, and high load adaption; with output overvoltage and short-circuit protection (customized for undervoltage protection; when the output voltage is too high or in case of load short circuit, this machine can cut off the output automatically) for electric safety of equipment.

TND, TDS Series Voltage Stabilizer

6 Outline Dimensions and Weight

Number of phases	Model & Spec.	Product dimensions, max L x W x H (mm)	Net weight (kg)	Packing quantity (pcs)
Single-phase	TND-0. 5	190 × 170 × 125	3. 6	4
	TND-1	210 × 190 × 155	5	4
	TND-1. 5	210 × 190 × 155	6	4
	TND-2	290 × 240 × 195	9. 2	1
	TND-3	305 × 230 × 230	11. 7	1
	TND-5 (benchtop)	355 × 220 × 295	17	1
	TND-7. 5 (benchtop)	420 × 240 × 370	28	1
	TND-10 (benchtop)	420 × 240 × 370	30	1
	TND-15	420 × 380 × 740	63	1
	TND-20	420 × 380 × 740	66	1
	TND-30	420 × 380 × 740	83	1
Three-phase	TNS-1. 5	490 × 320 × 170	13	1
	TNS-3	490 × 320 × 170	17	1
	TNS-4. 5	490 × 320 × 170	18	1
	TNS-6	360 × 270 × 640	31	1
	TNS-9	390 × 310 × 760	40	1
	TNS-15	440 × 350 × 780	60	1
	TNS-20	520 × 400 × 860	75	1
	TNS-30	520 × 400 × 860	86	1
	TNS-40	650 × 530 × 1080	175	1
	TNS-50	650 × 530 × 1080	180	1
	TNS-60	650 × 530 × 1080	185	1
	TNS-75	670 × 570 × 1310	231	1

TND, TDS Series Voltage Stabilizer

7 Ordering Notice

For suitable selection and safety in use, comply with the following requirements when ordering:

7.1 The input of this series of three-phase product is three-phase four-wire system connection, and neutral wire must be connected at input when operation.

7.2 When three-phase voltage stabilizer is working as single-phase or three-phase product, the maximum capacity of the output per phase is 1/3 nominal capacity of the machine.

7.3 Generally, when the input voltage is not below 90% of rated voltage (that is, single-phase: 220V x 90% = 198V; three-phase: 380 x 90% = 342V), the type and specification of voltage stabilizer can be reasonably selected according to the rated power, power-on surge current, and load type (such as inductive or capacitive) of the electrical equipment, and the sufficient margin shall be kept for product output capacity. For specific selection capacity coefficient, refer to the Table below:

Load type	Type of electrical equipment	Capacity coefficient (reference value)	Selected capacity of voltage stabilizer
Pure resistive load	Incandescent lamp, resistance heating wire, and electric stove	1.1~1.3	Greater than or equal to 1.1~1.3 times load power
Inductive or capacitive	Air conditioner, fluorescent lamp, fan, water pump, motor, refrigeration equipment (such as refrigerator and chiller), machining equipment (such as machine tool and punch press), and equipment used in many sites such as building, construction, factories and mins	2.5~3 (the power factor of the electrical appliances is generally not less than 0.8)	Greater than or equal to 2.5~3 times load power (greater than 4~6 times or above load power is selected for stone breaker, ball mill, and mining equipment)

For example: Generally main electrical apparatus in family include a 1.5P air conditioner with a power of about 2000W (generally 750 ~ 950W for 1P for refrigeration or refer to the maximum input power), a induction cooker 2000W, a refrigerator 200W, a fluorescent lamp 40W, a computer 300W, a 40″ LED TV with a power of about 130W, and an exhaust fan 45W; when the input voltage is ranged 198V to 250V, the corresponding output capacity curve is 100%. The calculation formula for each one is (2000W+2000W+200W+40W+300W+130W) x 2.5 (capacity factor) ÷ 100% (capacity ratio P/Pe) = 11675W; the selected model is TND – 15kVA (15000VA).

7.4 When the input voltage is below 198V for single phase, and 342V for three-phase, reduce the load by the voltage stabilizer or increase the capacity for selection of product. For details, refer to the product output capacity curve to avoid overload.

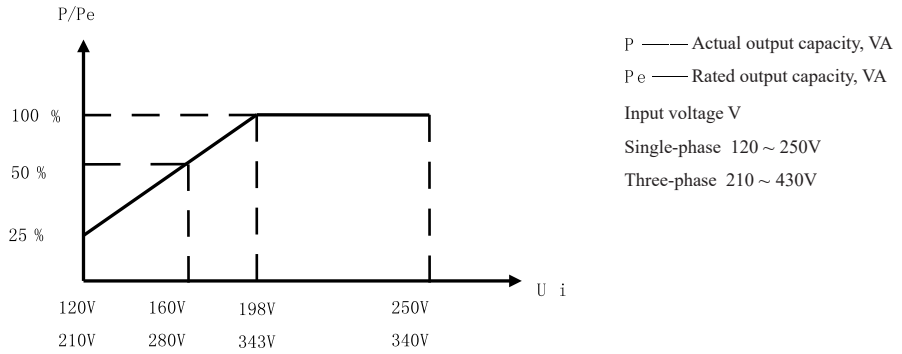

For example: When single-phase power is used by a user, main electrical apparatuses include two 1.5P air conditioners with about 2850W, one water pump 1000W, and five 100W exhaust fans, with the calculation formula (2850W+1000W+100W x 5) x 3 (capacity factor) = 13050W; when the input voltage is 160V, the corresponding output capacity curve is 50%, 13050W ÷ 50% (capacity ratio P/Pe) = 26100W, so the model TND-30kVA (30000VA) is selected. For user using three-phase power, refer to the calculation method of single-phase, and the input voltage corresponds to three-phase 210~430V.

Description: a. The above output capacity curve can refer to the corresponding point. If there is no exact corresponding capacity ratio point, determine a large capacity ratio by referring to the basic range of capacity curve.

b. After selecting product according to the above reference method, 60% ~ 80% actual capacity range is generally recommended (so the product has less power consumption and high working reliability).

c. For specially customized or unconventional product, the output capacity and working conditions can be used properly according to the customization requirements or actual product design situations.

DBW/SBW Series High-Power Compensated Voltage Stabilizer

1 Overview

The product is suitable for applications with voltage regulation required such as large electrical equipment and machine tool equipment in industrial and mining enterprises, post and telecommunication, railway, medicine, precise instruments in computer room, elevators, air conditioner, and household appliances.

2 Type Designation

□ B W — □ — kVA

- kVA: Rated capacity
- □: With "F" is separate phase regulation
- W: Voltage stabilizer
- B: Compensation type
- □: S-three phase D-single phase

3 Technical Parameters

Input voltage	Single phase: 220V Input range 176V~264V	Three phase: 380V Input range 304V~456V
Output voltage	Single-phase: 220V	Three-phase: 380V
Voltage stabilizing accuracy	±(1.5~5)% (factory set value ± 3%)	±(1.5~5)% (factory set value ± 3%)
Frequency	50Hz~ 60Hz	50Hz~ 60Hz
Response speed	≤1.5s (when input voltage fluctuation is 15V)	≤1.5s (when input voltage fluctuation is 25V)
Insulaiton resistance	≥3MΩ	≥3MΩ
Output protection	Shut down automatically when the output voltage exceeds 250V	Shut down automatically when the output voltage exceeds 430V

Notes:

1. The voltage stabilizer with three phase 380 voltage regulated to 220V or 200V can be customized according to the customer requirements; the supported voltage regulator with voltage stabilization and regulation function such as three phase 220V voltage regulated to 220, 380 or 480V can also be customized.

2. The ultra-low voltage type stabilizer can be customized according to the voltage environmental conditions at the customer's working site.

4 Operating Conditions

4.1 Ambient temperature: -5~+40℃.

4.2 Altitude: Not exceed 1,000 meters.

4.3 Relative humidity: ≤90% (when the ambient temperature is +20℃).

4.4 Installation site: The well ventilated and dry indoors site where there is no chemical gas or other corrosive medium that causes serious destroy to the insulation performance of voltage regulator, and no vibration, bumps, or sunlight exposure is required.

4.5 If inconsistent with the above specified special working conditions, the users need to contact our company for confirmation through the negotiation.

DBW/SBW Series High-Power Compensated Voltage Stabilizer

5 Specification, Dimensions, and Weight

Model	Rated capacity (kVA)	Dimensions (L x W x H) (mm)	Weight (kg)
SBW-30kVA	30	580 X 750 X 1270	200
SBW-50kVA	50	620 X 800 X 1300	244
SBW-80kVA	80	620 X 850 X 1460	320
SBW-100kVA	100	620 X 850 X 1460	356
SBW-150kVA	150	700 X 1000 X 1670	500
SBW-180kVA	180	700 X 1000 X 1670	560
SBW-200kVA	200	700 X 1000 X 1670	680
SBW-250kVA	250	800 X 1100 X 1850	750
SBW-320kVA	320	800 X 1100 X 1850	850
SBW-400kVA	400	1200 X 1100 X 1950	1030
SBW-500kVA	500	1200 X 1100 X 1950	1380
SBW-600kVA	600	1300 X 1150 X 1950	1680
SBW-F-800kVA	800	850 X 1100 X 2100	2100
SBW-F-1000kVA	1000	850 X 1100 X 2100	2450
SBW-F-1250kVA	1250	950 X 1100 X 2200	2850
SBW-F-1500kVA	1500	950 X 1300 X 2200	3200
DBW-20kVA	20	580 X 750 X 1200	200
DBW-30kVA	30	580 X 750 X 1200	230
DBW-50kVA	50	620 X 800 X 1230	290
DBW-70kVA	70	620 X 850 X 1390	350
DBW-100kVA	100	620 X 850 X 1390	430
DBW-150kVA	150	700 X 1000 X 1600	530
DBW-200kVA	200	700 X 1000 X 1600	780

6 Features

6.1 With “Mains supply/Voltage regulation” manual switching function: when the mains supply works smoothly with slight voltage fluctuation, it can be switched to the “Mains supply” direct mode, saving power consumption and extending service life.

6.2 With overvoltage alarm and auto shutdown protection in case of delay: When the input voltage increases greatly or there is other fault to cause that the output voltage of voltage regulator exceeds the rated value, or when the single-phase voltage exceeds 240V or three-phase voltage exceeds 420V, the equipment will stop automatically after 3-minute delay for protection with an alarm issued to prompt the user for timely inspection for troubleshooting.

6.3 Auto startup function after power-on in case of power outage (customized): The machine can work automatically to recover power supply after power-on when power supply stops instantaneous in the power grid, and there is no need of person to be on duty.

DBW/SBW Series High-Power Compensated Voltage Stabilizer

7 Ordering Notice

7.1 Selection

It is recommended to select the rated capacity of voltage regulator according to the following calculation formula: S=P S'/cosφ. S – Actual rated capacity required of voltage regulator; P – Load power at user end; S′ - Safety factor; cosφ – Power factor.

7.2 Power factor:

7.2.1 Pure resistance load: The power factor generally is cosφ≈1 (such as incandescent lamp, electric furnace, electric oven, electric heating room, resistance load box, and water heater).

7.2.2 Inductive or capacitive load: The power factor generally is cosφ≈0.6~0.8 (such as computer, motor, refrigerator, freezer, air conditioning, exhaust fan, hydraulic machine, gas pump, bending machine, grinding machine, punching machine, press machine, color printing, screen printing, spot welding, electric welding, spark, chip mounter, transformer, capacitive compensating tank, production line in production workshop, and radio and television equipment).

7.2.3 Integrated load: The power factor generally is cosφ≈0.6~0.7 (such as integrated load in factory, hotels, and household appliances).

7.3 Safety factor:

7.3.1 In the inductive or capacitive load environment, the impact influence of large load starting current on the voltage regulator shall be considered when selection, so "S′" shall take 2~3 times safety factor.

7.3.2 If the working site is outdoor place, the transmission and distribution line is far from the site (300m ~ 800m) (such as building site and tunnel), and the load equipment starts and stops frequently and works intermittently (for example, pile driving machinery, dedicated transfer pump of tunnel, crane, tunnel blower, loader, roadheader, large air compressor, and large electric welding machine are impact loads), it is recommended that "S′" shall take 3~4 times safety factor.

7.3.3 When the three-phase voltages at the working site are unbalanced, there is difference between the line voltages is about 30V, and the voltage fluctuation is severe during the power peak period and the upper and lower momentary fluctuation is about 45V, the product with three-phase partial-regulating ultra-low voltage (SBW-F model) must be customized, and it is recommended that "S′" shall take 2.5~3 times safety factor.

7.4 When three-phase voltage regulator works under the single-phase load, the single-phase load allowed per phase is 1/3 of rated nominal capacity.

7.5 When the input and output circuit of the product adopts three-phase four-wire system, the input end must be connected to the zero line.

7.6 Any special requirements by user shall be specified, and the product can be designed and produced by our company.

RT16 Series AC Knife Contact Fuse

1 Overview

RT16 Series AC Knife Contact Fuse has the advantages of Small volume, light weight, low power consumption and high breaking capacity, and is used in AC power distribution device with rated frequency 50Hz, rated voltage up to C500V/AC690V and below, and with rated current up to 1250A for overload and short-circuit protection. Also, the product with an "impactor" function is selected and used in the electrical devices such as power distribution device for signal output in case of product fusing.

Standard: IEC60269-2.

2 Type Designation

RT 16 - A 1 / 100A

- 100A: Rated current: 2A-1250A (refer to the parameters table)
- 1: Size:00: (2-160)A 1: (63-250)A 2: (125-400)A 3: (315-630)A 4: (800-1250)A
- A: Additional functions: A: With impactor; default: No
- 16: Design code
- RT: Knife type contact fuse

3 Technical Parameters

Model	Similar models at home and abroad	Rated current (A)	Rated voltage (V)	Rated power dissipation (W)	Rated breaking capacity (W)
RT16-00	RT36-00 NT00	2	500/690	1.3	120/50
		4		1.5	
		6		1.6	
		8		1.7	
		10		1.8	
		16		2.1	
		20		2.5	
		25		3.1	
		32		3.6	
		40		4.0	
		50		5.3	
		63		6.2	
		80		6.9	
		100		10.0	
		125		11.6	
		160		12	
RT16-1	RT16-1 NT1	80	500/690	8.4	120/50
		100		12.3	
		125		13.7	
		160		16.6	
		200		21.2	
		250		23.0	
RT16-2	RT16-2 NT2	125	500/690	21.7	120/50
		160		23.1	
		200		26.8	
		224		29.1	
		250		31.2	
		315		32.5	
		350		33.6	
		400		34.0	
RT16-3	RT36-3 NT3	315	500/690	34.5	120/50
		400		38.0	
		500		45.3	
		630		48.0	
		800	690	75.3	100
RT16-4	RT36-4 NT4	800	500/690	75.3	120/50
		1000		91.5	
		1250		110	

RT16 Series AC Knife Contact Fuse

4 Operating

4.1 Ambient temperature: Not greater than 40℃; the average measured within 24h does not exceed 35℃, and measured within one year is below this value. The minimum value of ambient air temperature is -5℃.

4.2 Altitude: Not exceed 2,000 meters.

4.3 Atmospheric conditions: The air is clean, and its relevant humidity does not exceed 50% at the maximum temperature 40℃; a higher relevant humidity is allowed at the lower temperature. For example, the relevant humidity can reach 90% at 20℃; the middle condensation may occur occasionally due to the temperature changes under those conditions.

4.4 Pollution degree: 3.

4.5 Installation category: Class III.

4.6 If the use conditions are different from the above, please contact the manufacturer.

5 Outline and Installation Dimensions

5.1 Fuse dimensions

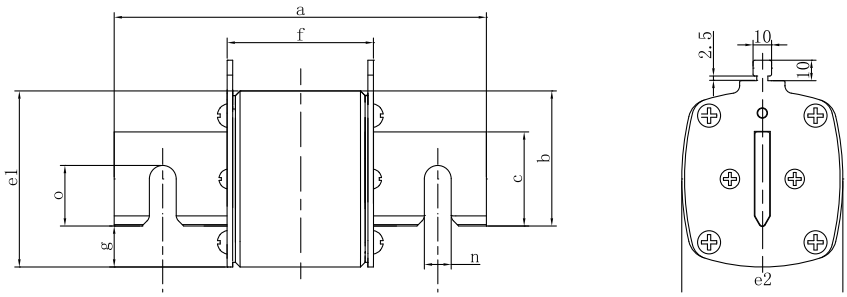

Model	Size(mm)										
	a	b	c	e1	e2	f	g	H	m	n	o
RT16Z-00	78.5±2	35±1.5	15±1	45±1	28.5±1.5	49±1.5	13±2	5.9±0.2	-	-	-
RT16Z-1	133±3	40±1.5	20±1	48±1.5	48±1.5	67±3	13±2	5.9±0.2	-		-
RT16Z-2	148±3	48±1.5	26±1	58±1.5	58±1.5	67±3	13±2	5.9±0.2	-	-	-
RT16Z-3	148±3	60±2.5	32±1	66.5±1.5	66.5±1.5	67±3	16±2	5.9±0.2	-	-	-
RT16Z-4	203±3	83±2.5	50±1	93±2	88±3	90±3	20±2	7.8±0.2	150±3.0	15±1	33±1

5.2 Outline dimensions of fuse base

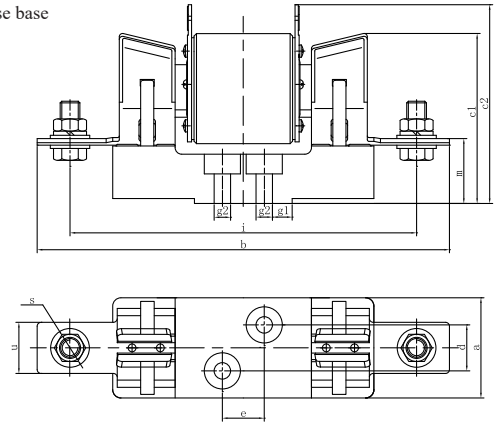

RT16 Series AC Knife Contact Fuse

Size	RT16-00	RT16-0	RT16-1	RT16-2	RT16-3	RT16-4
a	30	30	58	64	64	88
b	120	170	200	225	250	304
c1	60	73	82	98	105	145
c2	85	93	96	112	120	165
d	0	0	30	30	30	45
e	25	25	25	25	25	30
g1	8	16	15	17	17	4
g2	7.5	7.5	10.5	10.5	10.5	13
i	100	150	175	200	210	260
m	25	38	38	40	40.5	47.5
s	M8	M8	M10	M12	M12	M16
u	25	25	25	30	40	45

5.3 RT16-00 series 3P base installation dimensions

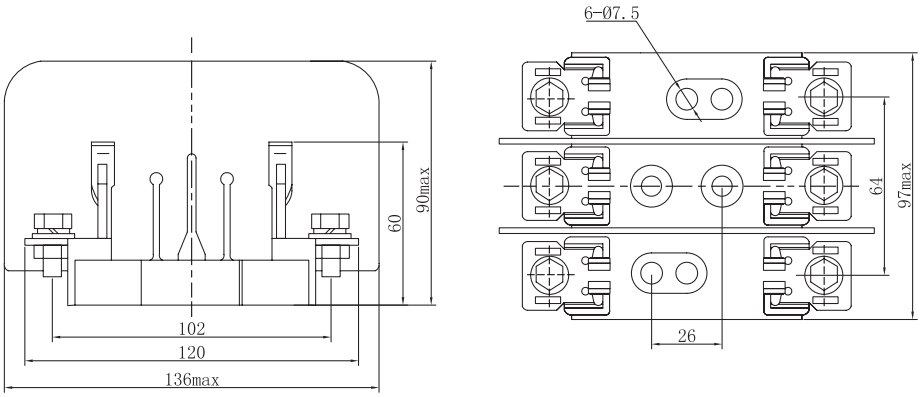

(RT16-00 3P base)

6 Ordering Notice

6.1 Please specify the following items when ordering:

6.1.1 Specify the product mode, rated current, and quantity of fuse.

6.1.2 Specify the model, specification, seat, and order quantity of seat.

6.2 Order example:

For RT16-00/100A, 100 sets, indicate 100 RT16-00 fuses with rated current of AC 100A are ordered.

For RT16-00 (base), 100 pcs, indicate 100 pieces of RT16-00 AC fuse base are ordered.

RT18 Series Cylindrical Cap Fuse

1 Overview

RT18 series cylindrical cap fuse is suitable for power distribution equipment of AC 50Hz industrial electrical device with rated voltage up to 690V and rated current up to 125A for line overload and short-circuit protection. (It is not recommended to install this fuse in the capacitor box, and RT16-00 model is recommended for capacitor box).

Fuse-base signal device formed by LED lamp and resistor Code “X”.

Standard: IEC60269-2.

2 Type Designation

RT 18 – □ X / □

- Remarks
- X: means fuse with an indicator light; No X: means fuse without an indicator light
- Max. current of fuse
- Design No.
- Cylindrical Cap Fuse

3 Operating Conditions

3.1 Ambient temperature: No more than 40℃; the mean temperature measured in 24 hours does not exceed 35℃, and the mean temperature measured in a year is lower than the above value. The minimum ambient air temperature is -5℃.

3.2 Altitude: No more than 2000m.

3.3 Atmospheric conditions: The air is clean, and its relative humidity does not exceed 50% at a maximum of 40℃; higher relative humidity is allowed at lower temperatures, for example, the relative humidity can be up to 90% at 20℃. The moderate condensation may occur incidentally due to temperature changes under these conditions.

3.4 Pollution degree: Level 3.

3.5 Installation category: Class III.

3.6 If the working conditions are different from the above, please consult the manufacturer.

4 Electrical characteristics

4.1 Test conditions

All tests should be carried out at ambient temperature of 20℃±5℃.

4.2 Load capacity test

When the fuse link is applied with conventional non-fusing current for testing, the circuit should not open within the agreed time, the fuse link shall not be fused by the current, and the fuse tube is not broken.

4.3 Breaking Capacity

The breaking capacity of the fuse link shall meet the breaking capacity requirements specified in the table below. When the fuse opens the circuit, the fuse link and its parts can be decolored or cracked, but they must be kept as an integral before the fuse link is removed from the fuse carrier or test rack and the insulation resistances on both ends shall not be less than 0.1MQ.

RT18 Series Cylindrical Cap Fuse

Rated voltage	Breaking current
AC 500V/690V	120kA/50kA

4.4 Time-Current Characteristics

When the fuse link is applied with the current specified in the table below, the fusing time must meet the requirements of the table below.

Rated current (A)	Agreed time	Conventional current	
		Conventional non-fusing current (A)	Conventional non-fusing current (A)
In ≤ 4	1h	1.5In	2.1In
4 ＜ In ＜ 16	1h	1.5In	1.9In
16 ≤ In ≤ 63	1h	1.25In	1.6In

Note: In is the rated current

4.5 Power Loss

When the fuse link is applied with rated current, the product of the voltage and current at both ends of the fuse is the power loss of the fuse when the temperature change is less than 1oC within 0.5 hours.

5 Fuse Characteristic Curve

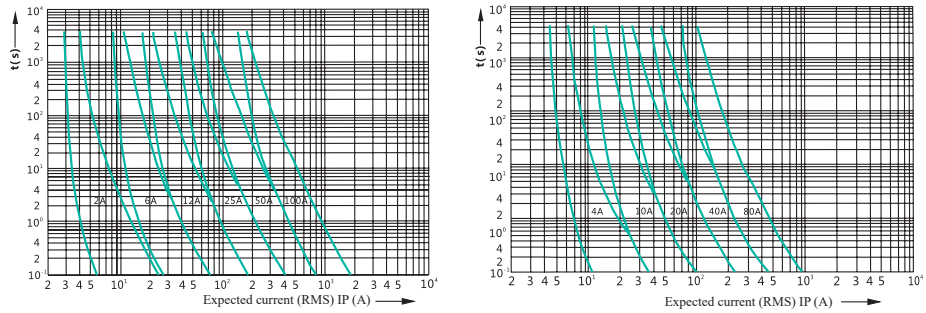

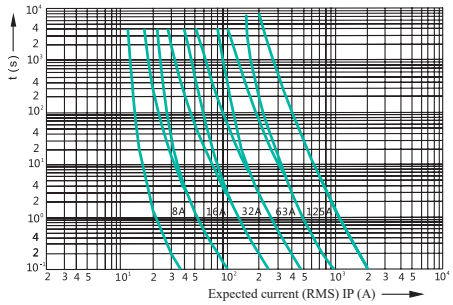

"gG" fuse link time – current band

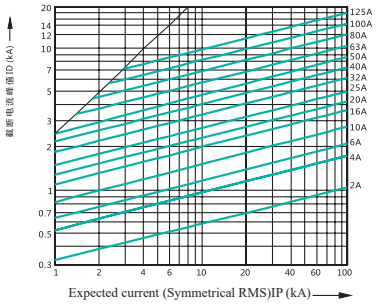

"gG" fuse link cut-off current characteristic curve

RT18 Series Cylindrical Cap Fuse

6 Product Outline Drawing and Installation Dimensions

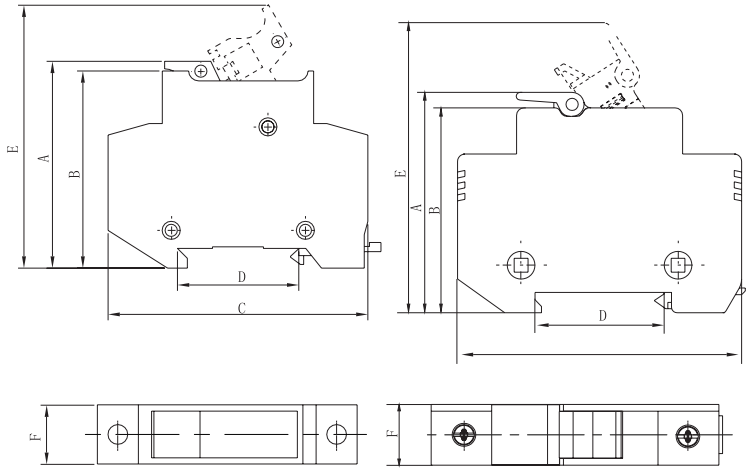

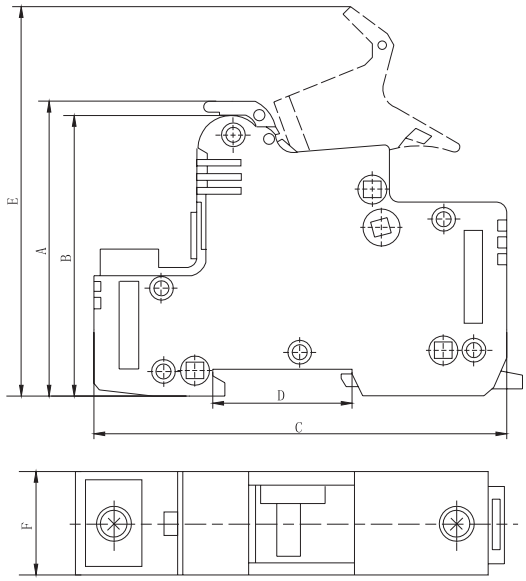

Model	Rated voltage (V)	Rated current (A)	Number of poles	Dimensions (mm)					
				A	B	C	D	E	F
RT18-32 RT18-32X	690	32	1P	62	60	79	35	80	18
	690	32	2P	62	60	79	35	80	36
	690	32	3P	62	60	79	35	80	54
RT18-63 RT18-63X	690	63	1P	80	78	103	35	110	26
	690	63	2P	80	78	103	35	110	52
	690	63	3P	80	78	103	35	110	78
RT18L-125 RT18XL-125 (X means with indicator, L means plastic shell)	690	125	1P	78	75	126	35	104	36
	690	125	2P	78	75	126	35	104	72
	690	125	3P	78	75	126	35	104	108

RT18 Series Cylindrical Cap Fuse

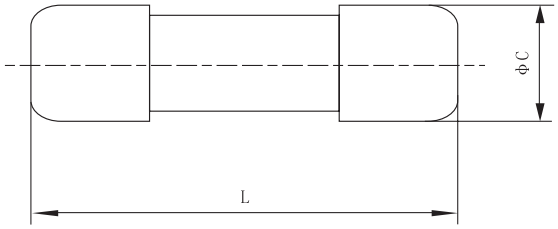

Model	Size φC×L	Rated voltage (V)	Rated current (A)	Dissipation power (W)	Rated breaking capacity (kA)
RT18-32	10×38	500/690	2,4,6,8,10,16,20,25,32	≤ 3	120/50
RT18-63	14×51	500/690	2,4,6,8,10,16,20,25,32,40,50,63	≤ 5	120/50
RT18-125	22×58	500/690	16,20,25,32,40,50,63,80,100,125	≤ 9.5	120/50

7 Product Sign

7.1 The signs on the fuse link should be easily seen.
7.2 Each fuse link shall be marked with the following contents:
7.2.1 Trademark: TENGEN
7.2.2 Breaking range and use category: gG
7.2.3 Rated current: 2A, 4A, 6A, 8A, 10A, 16A, 20A, 25A, 32A, 40A, 50A, 63A, 80A, 100A, 125A
7.2.4 Rated voltage: AC 500V/690V
7.2.5 Model marking:
Fuse link model RT18-32, RT18-63, RT18-125
Support part (base) model: RT18-32, RT18-32X; RT18-63, RT18-63X; RT18L-125, RT18XL-125

8 Packaging Requirements

8.1 Label
The label should include: model, rated voltage, rated current, production month.
8.2 All products should be packaged in such a way as to resist vibration during the transportation or storage of the product.

9 Ordering Notice

9.1 The following must be specified when ordering:
9.1.1 The product model, rated current and quantity of the fuse link.
9.1.2 The model, specification, base, and order quantity of the base.
9.2 Order Example:
For example, RT18-32/32A 100 units means to order 100 RT18-32 fuse links with a rated current of 32A.
For example, RT18-32 base 100 units means to order 100 fuse bases of the RT18-32 modes.

RT18-PV DC Photovoltaic Fuse

1 Overview

RT18-PV DC Photovoltaic Fuse is suitable for solar photovoltaic system with rated voltage up to DC1000V, rated current up to 20A, and rated breaking capacity up to 20kA mainly for overload and short-circuit protection; breaking range and usage category: gPV.

Standard: IEC60269-6

2 Type Designation

Fuse model:

RT 18 – PV / □

- □ — Rated current of fuse
- PV — Photovoltaic fuse
- 18 — Design code
- RT — Fuse

Mounting base and fixed clamp:

RT18 – PV / □

- □ — Installation accessories:
  - Base: Rail mounting base
  - Clamp: PCB welding fixed clamp
- RT18 – PV — Photovoltaic fuse

3 Technical Parameters

Model	Dimension L x C	Rated voltage (V)	Rated current (A)	Power dissipation	Rated breaking capacity (kA)
RT18-PV	10×38	DC1000	2, 4,6,8, 10, 12, 15, 16, 20	≤3	20

RT18-PV DC Photovoltaic Fuse

4 Outline and Installation Dimensions

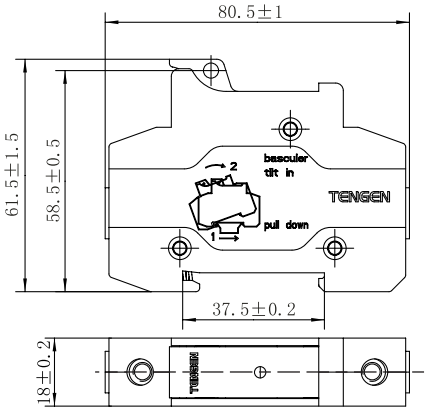

RT18-PV base installation dimension drawing

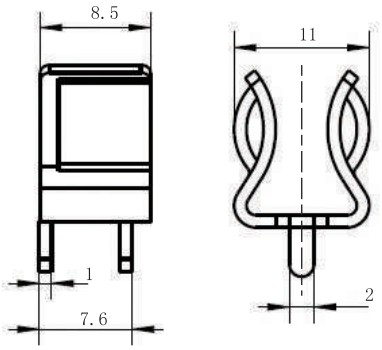

Outline dimension drawing of PCB plate welding fixed clamp

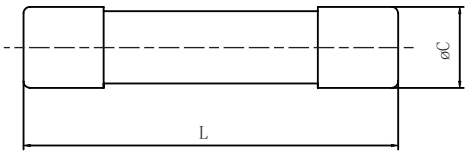

Fuse outline dimension drawing

5 Operating Conditions

5.1 Ambient temperature: -25℃ ~ +60℃
Refer to air temperature directly around the fuse body rather than room temperature. In many applications, the fuse temperature is quite high, because the fuse is installed in the supports / bases of different structure and the entire fuse is also sealed in a power distribution / control cabinet.

5.2 Altitude: Not exceed 2,000 meters

5.3 Atmospheric conditions: The air is clean, and its relative humidity does not exceed 50% at the maximum temperature 60℃; a higher relative humidity is allowed at a low temperature. For example, the relative humidity can be up to 85% at 20℃, and the maximum relative humidity does not exceed 90%; the middle condensation may occur occasionally due to temperature changes under those conditions.

5.4 Pollution degree: 3.

5.5 Installation category: III.

5.6 Installation site: The fuse shall be installed in places where there is no obvious shaking or impact vibration.

5.7 Please contact the manufacturer when the working conditions are different from the above conditions.

RT18-PV DC Photovoltaic Fuse

6 Characteristic Curve

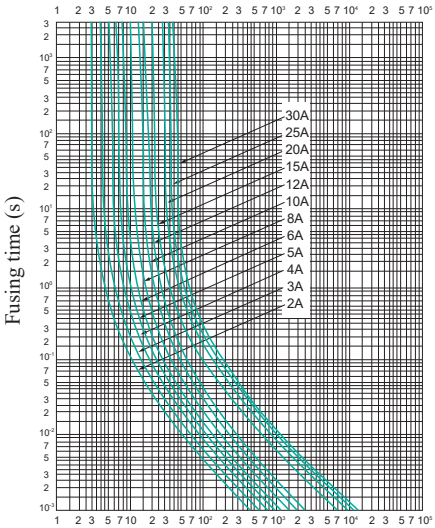

Expected current Ip (effective value) (A)

Time – current characteristic curve

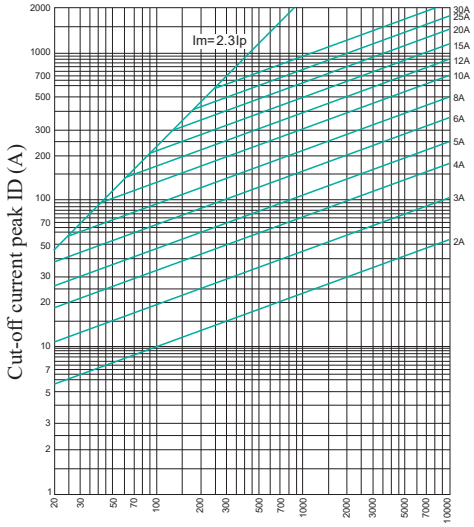

Expected current (absolute effective value) Ip(A)

Cut-off current characteristic curve

7 Ordering Notice

7.1 Please specify the following contents when ordering:

7.1.1 Please specify the product model, rated current, and quantity of fuse;

7.1.2 Please specify the model, specification, base, and order quantity of base;

7.2 Order example: To order RT18-PV/16A 100 pcs, indicating 100 pcs RT18-PV fuses with r rated current 16A;

To order RT18-PV/base 100 pcs, indicating 100 pcs RT18-PV fuse bases.

RT18G-PV DC Photovoltaic Fuse

1 Overview

RT18G-PV series DC photovoltaic fuse is suitable for photovoltaic system with rated voltage up to DC1500V, rated current up to 50A, and rated breaking capacity 30kA for overload and short-circuit protection; breaking range and usage category is gPV.

Standard: IEC 60269-6

2 Type Designation

RT 18 G – PV / 32

- 32: Number: Rated current of fuse (specification sees "Parameters Table")
- PV: Base: Fuse base
- G: Photovoltaic dedicated
- 18: High breaking capacity
- RT: Design code
- Powder-filled cartridge fuse

3 Operating Conditions

3.1 Ambient temperature: -40℃~+125℃.
Refer to air temperature directly surrounding the fuse rather than room temperature. In many applications, the fuse has quite high temperature, because the fuse is used in supports or base of different structure, and the entire fuse is installed in a closed power distribution box or control cabinet;

3.2 Altitude: Not exceed 2,000 meters;

3.3 Atmospheric conditions: The air is clean, and its relative humidity does not exceed 50% at the maximum temperature 60℃; a higher relative humidity is allowed at a low temperature. For example, the relative humidity can be up to 85% and the maximum relative humidity can be up to 90% at 20℃; the middle condensation may occur occasionally due to temperature changes under those conditions.

3.4 Pollution degree: 3.

3.5 Installation category: III.

3.6 Installation site: The fuse shall be installed in places where there is no obvious shaking or impact vibration;

3.7 If the working conditions are different from the above, please contact the manufacturer.

4 Technical Parameters

Model	Rated voltage (V)	Rated current (A)	Power dissipation (W)	Rated breaking capacity (kA)
RT18G-PV	DC1500	2A, 4A, 6A, 8A, 10A, 12A, 15A, 16A, 20A, 25A, 30A, 32A, 40A, 45A, 50A	≤8	30

RT18G-PV DC Photovoltaic Fuse

5 Outline and Installation Dimensions

Fuse dimensions

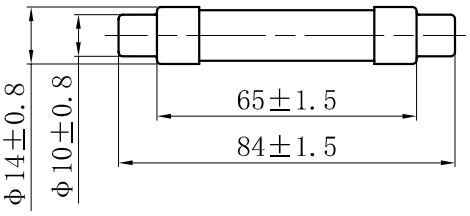

Fuse base (with a spacer plug) dimensions

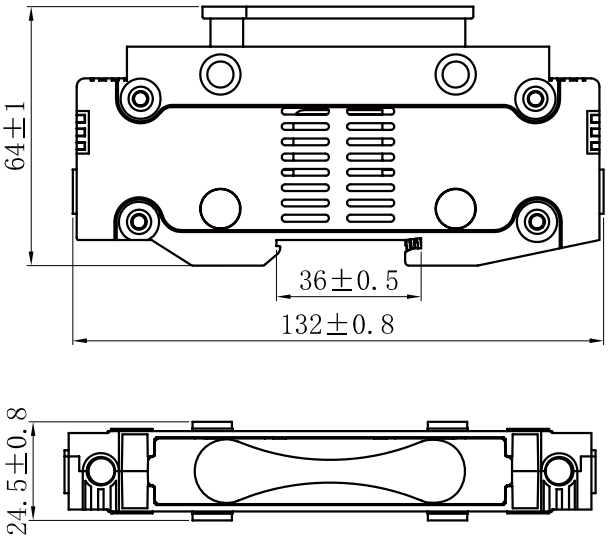

RT18G-PV DC Photovoltaic Fuse

Fuse base (without a spacer plug) dimensions

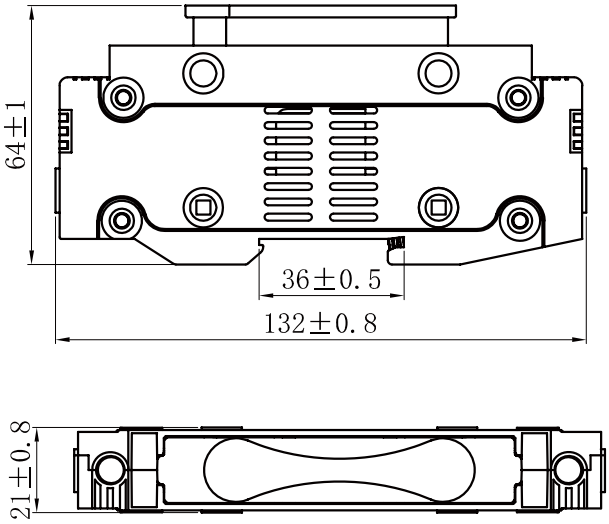

6 Ordering Notice

6.1 Please specify the product model, rated current or base, order quantity

6.2 Order example: To order RT18G-PV/20V 100 pcs, indicating 100 pcs RT18G-PV fuses with rated current 20A

To order RT18G-PV/base 100pcs, indicating 100 pcs RT18G-PV fuse bases

B

MODULAR DEVICES

B001-B146

MODULAR DEVICES

Miniature Circuit Breakers

Residual Current Circuit Breakers

Residual Current Circuit Breaker with Overcurrent Protection

Switch Disconnectors

Accessories of MCBs

Arc Fault Detection Device

Modular Contactors

Overvoltage and Undervoltage Protec tors

Surge Protective Devices

Metal Boxes

Miniature Circuit Breakers

TGB1N-40 Series, 4.5KA DPN MCB

Page 001

TGB1N-63(A) Series, 6(4.5)KA MCB

Page 004

NEW

TGB1N-63(A)P Series, 4.5(3)KA MCB

Page 007

TGB1N-125(H) Series, 6(10)KA MCB

Page 011

TGB3-40 Series, 6KA DPN MCB

Page 015

TGB3(H)-63 Series, 6(10)KA MCB

Page 018

NEW

TGB3-63(H)DC Series, 6(10)KA MCB

Page 021

NEW

TGB3-63HZ Series, 10KA DC MCB

Page 025

NEW

TGB3-63(H) Series, 6(10)KA AC MCB

Page 029

NEW

TGB3Z-63(H) Series, 6(10)KA AC/DC MCB

Page 033

TGB3(H)-125 Series, 6(10)KA MCB

Page 037

TGBG-63DC Series, 6KA DC MCB

Page 041

THB1-63L Series, 15KA MCB

Page 045

TGB2D-80R Series, 6KA Photovoltaic & Building Dedicated MCB

Page 050

NEW

TGB2D-125RW Series, 6KA Photovoltaic & Building Dedicated MCB

Page 053

NEW

TGBMA Series, 6kA Single Magnetic MCB

Page 056

NEW

THB1D2-63H Series, 6KA DC MCB

Page 059

Residual Current Circuit Breakers

TGL1N-80(H) Series RCCB, Electromagnetic A-S/AC-S Type

Page 062

TGL1N-80H Series RCCB, Electromagnetic B Type

Page 065

Residual Current Circuit Breaker with Overcurrent Protection

TGB1NLE-32(63) Series RCBO, Electronic AC Type

Page 068

TGBGLB-63 Series RCBO, Electronic B Type

Page 081

TGB1NL-40 Series RCBO, Electromagnetic A/AC Type

Page 072

TGB1NLE(A)-40(H)L Series RCBO, Electronic A/AC Type

Page 085

TGB1NLE-63Y Series RCBO, Electronic A/AC Type

Page 076

TGB1NLE(LA)M-40 Series RCBO, Electronic A/AC Type

Page 089

Switch Disconnectors

TGH1N-125 Series Switch Disconnector

Page 092

Accessories of MCBs

Accessories of TGB1N-63 Series Circuit Breaker

Page 094

Accessories of TGB1N-125 Series Circuit Breaker

Page 109

Accessories of TGB3 Series Circuit Breaker

Page 102

Arc Fault Detection Device

AFDD Series Arc Fault Detection Device

Page 115

Modular Contactors

TGCH1N Series Modular Contactor

Page 118

Overvoltage and Undervoltage Protectors

TGZGQS Series Overvoltage and Undervoltage Protector

Page 124

TGZGQ1N Series Overvoltage and Undervoltage Protector

Page 130

Surge Protective Devices

TGDY55 Series Surge Protective Device

Page 133

TGU3 Series Surge Protective Device

Page 137

Metal Boxes

JXF Series Power Distribution Box

Page 140

AXM Series Plastic Distribution Box

Page 144

ACM Series Metal Distribution Box

Page 142

TGB1N-40 Series, 4.5KA DPN MCB

1 Overview

TGB1N-40 miniature circuit breakers (hereinafter referred to as circuit breakers) are mainly used in the AC 50/60Hz power line facilities and electrical equipment in households and similar places with rated voltage 230V, and rated current up to 40A for overload and short-circuit protection, and suitable for infrequent breaking and making operation, especially suitable for industrial and commercial lighting distribution systems.

2 Type Designation

TG B 1N - 40 1P+N C 16

- 16 — Rated current (A)
- C — Instantaneous trip characteristic type (C/D)
- 1P+N — Number of poles (1P+N, pole N can be opened and closed)
- 40 — Frame current (A): 40
- 1N — Design code.
- B — Miniature Circuit Breaker
- TG — Enterprise code

3 Technical Parameters

3.1 The main technical parameters of the product (see Table 1)

Table 1

Product name		TGB1N-40
Standard		IEC/EN60898-1
Certificate		TUV, CE, CB
Electrical characteristics		
Number of poles		1P+N (N pole can be opened and closed)
Rated frequency (Hz)		50/60
Frame current (A)	Inm	40
Rated current (A)	Ie	6, 10, 16, 20, 25, 32, 40
Rated voltage (V)	Ue	AC230
Rated insulation voltage (V)	Ui	500
Rated impulse withstand voltage (kV)	Uimp	4
Rated short-circuit breaking capacity (kA)	Ics	4.5
Rated short-circuit breaking capacity (kA)	Icn	4.5
Instantaneous trip characteristics		C(5In ～ 10In） D(10In ～ 14In)
Trip form		Thermal magnetic trip
Pollution degree		2
Electrical and mechanical accessories		-
Mechanical properties		
Storage Temperature		10,000
Mechanical life		20,000 times
Protection grade		IP20
Normal operation conditions and installation features		
Ambient temperature		-35℃ ～ +70℃
Installation site altitude		≤ 2,000 meters
Terminals		Fixed with screw
Maximum wiring capacity (mm²)		10
Maximum limit torque (Nm)		1.5
Installation category		Class II, III
Installation method		TH35-7.5 standard rail
Incoming method		Top inlet and bottom inlet

TGB1N-40 Series, 4.5KA DPN MCB

3.2 Action characteristics of circuit breaker overcurrent release (see Table 2)

Table 2

Instantaneous trip type	Test current (A)	Start state	Specified time	Expected results	Remarks
a	1.13In	Cold state	t≤1h	Not trip	
	1.45In	Followed by 1.13In test	t < 1h	trip	The current rises to the specified value within 5s
	2.55In	Cold state	1s < t < 60s (In≤32A)	trip	
			1s < t < 120s (In > 32A)		
b	5In	Cold state	t≤0.1s	Not trip	Turn on the auxiliary switch
	10In	Cold state	t < 0.1s	trip	
c	10In	Cold state	t≤0.1s	Not trip	Turn on the auxiliary switch
	14In	Cold state	t < 0.1s	trip	

Note: The cold state refers to the temperature 30°C without load before the test.

3.3 Protection characteristic curve of circuit breaker

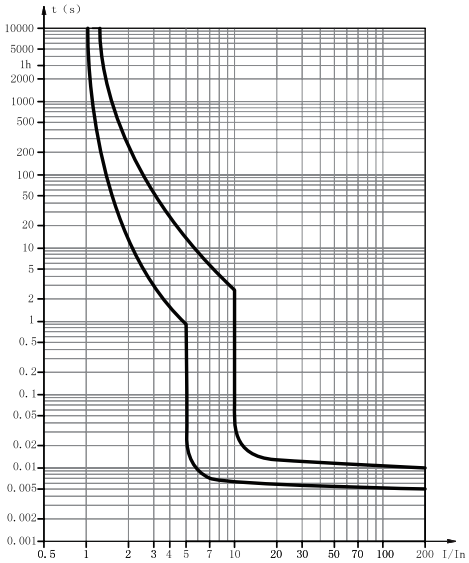

C type protection characteristic curve

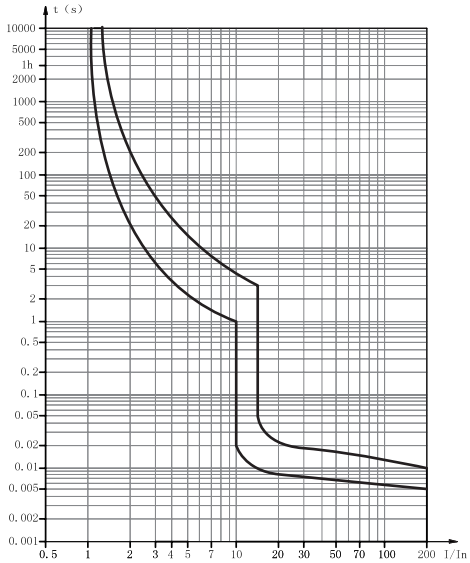

D type protection characteristic curve

3.4 Wiring: Suitable for wire connection of 10mm^2 and below (see Table 3). The wiring method is that the wire is fixed with screws according to the tightening torque 1.5N·m.

Table 3

Rated current (A)	Wire cross area (mm^2)
6	1
10	1.5
16 ~ 20	2.5
25	4
32	6
40	10

TGB1N-40 Series, 4.5KA DPN MCB

4 Outline and Installation Dimensions

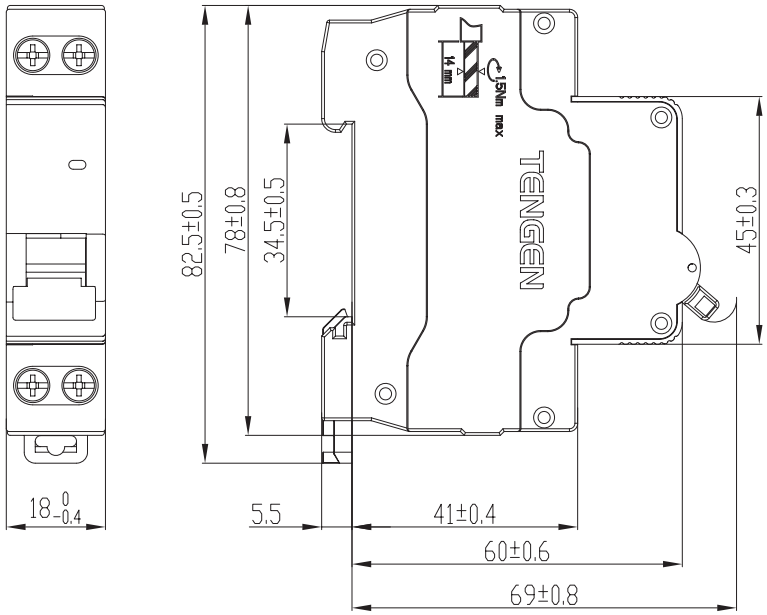

5 Ordering Notice

5.1 Please specify the product model, specification, rated current, number of poles, and order quantity when ordering.

5.2 Order example: TGB1N-40 miniature circuit breaker, C-type instantaneous release, rated current 32A, 1,000 units.
Specified as: TGB1N-40 1P+N C32 1,000 units

TGB1N-63(A) Series, 6(4.5)KA MCB

1 Overview

TGB1N-63(A) miniature circuit breakers (hereinafter referred to as circuit breakers) are mainly used in the AC 50/60Hz power line facilities and electrical equipment in households and similar places with rated voltage 230V/400V, and rated current up to 63A for overload and short-circuit protection, and suitable for infrequent breaking and making operation, especially suitable for industrial and commercial lighting distribution systems.

2 Type Designation

TG B 1N - 63 (A) 1P+N C 63

- 63 — Rated current (A)
- C — Instantaneous trip characteristic type (B/C/D)
- 1P+N — Number of poles (1P/1P+N/2P/3P/3P+N/4P)
- (A) — Breaking Capactity
  - A: 4.5kA
  - No mark: 6kA
- 63 — Frame rating rated current
- 1N — Design Code.
- B — Miniature Circuit Breaker
- TG — Enterprise code

3 Technical Parameters

3.1 The main technical parameters of the product (see Table 1)

Table 1

Product name	TGB1N-63A	TGB1N-63
Standard	IEC/EN60898-1	IEC/EN60898-1
Certificate	CE CB TUV	CE CB TUV
Electrical characteristics		
Number of poles	1P, 1P+N, 2P, 3P, 3P+N, 4P (N pole can be opened and closed)	1P, 1P+N, 2P, 3P, 3P+N, 4P (N pole can be opened and closed)
Rated frequency (Hz)	50/60	50/60
Frame current (A) Inm	63	63
Rated current (A) Ie	1, 2, 3, 4, 5, 6, 10, 16, 20, 25, 32, 40, 50, 63	1, 2, 3, 4, 5, 6, 10, 16, 20, 25, 32, 40, 50, 63
Rated voltage (V) Ue	AC230/400(1P) AC230(1P+N) AC400(2P, 3P, 3P+N, 4P)	AC230/400(1P) AC230(1P+N) AC400(2P, 3P, 3P+N, 4P)
Rated insulation voltage (V) Ui	690	690
Rated impulse withstand voltage (kV) Uimp	4	4
Rated short-circuit breaking capacity (kA) Ics	4.5	6
Rated short-circuit breaking capacity (kA) Icn	4.5	6
Instantaneous trip characteristics	B(3In ~ 5In) C(5In ~ 10In) D(10In ~ 14In)	B(3In ~ 5In) C(5In ~ 10In) D(10In ~ 14In)
Trip form	Thermal magnetic trip	Thermal magnetic trip
Pollution degree	2	2
Electrical and mechanical accessories	MX: Shunt release OF: Auxiliary contact SD: Alarm contact MX+OF: Shunt release + auxiliary contact MV: Overvoltage release MN: Undervoltage release MV+MN: Overvoltage and undervoltage release MNS: No-voltage release	
Mechanical properties		

TGB1N-63(A) Series, 6(4.5)KA MCB

Table 1, Continued

Product name	TGB1N-63A	TGB1N-63
Electrical life	10,000 times	10,000 times
Mechanical life	20,000 times	20,000 times
Protection grade	IP20	IP20
Normal operation conditions and installation characteristics		
Ambient temperature	-35℃ +70℃	-35℃ +70℃
Installation site altitude	≤ 2,000 meters	≤ 2,000 meters
Terminals	Fixed with screw	Fixed with screw
Maximum wiring capacity (mm²)	25	25
Maximum limit torque (Nm)	2.5	2.5
Installation category	Class II, III	Class II, III
Installation method	TH35-7.5 standard rail	TH35-7.5 standard rail
Incoming method	Top inlet and bottom inlet	Top inlet and bottom inlet

3.2 Action characteristics of circuit breaker overcurrent release (see Table 2)

Table 2

No.	Test current (A)	Start state	Specified time	Expected results	Remarks
a	1.13In	Cold state	t≤1h	Not trip	
	1.45In	Followed by 1.1.3In test	t < 1h	trip	The current rises to the specified value within 5s
	2.55In	Cold state	1s < t < 60s（对 In≤32A）	trip	
			1s < t < 120s（对 In > 32A）		
b	3In	Cold state	t≤0.1s	Not trip	Turn on the auxiliary switch for making current
	5In	Cold state	t < 0.1s	trip	
c	5In	Cold state	t≤0.1s	Not trip	Turn on the auxiliary switch for making current
	10In	Cold state	t < 0.1s	trip	
d	10In	Cold state	t≤0.1s	Not trip	Turn on the auxiliary switch for making current
	14In	Cold state	t < 0.1s	trip	

Note: The cold state refers to the temperature 30ºC without load before the test.

3.3 Protection characteristic curve of circuit breaker

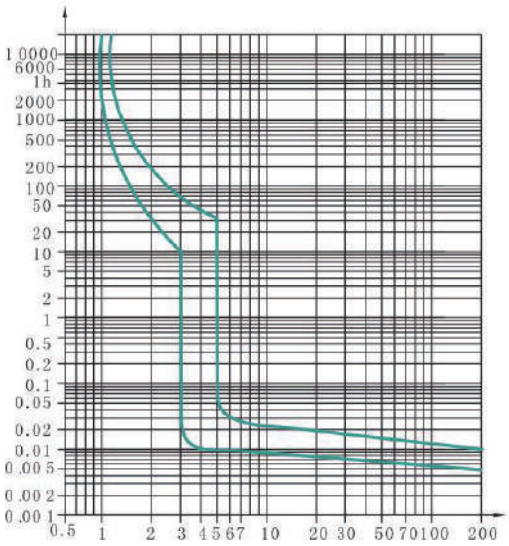

B Type protection characteristic curve

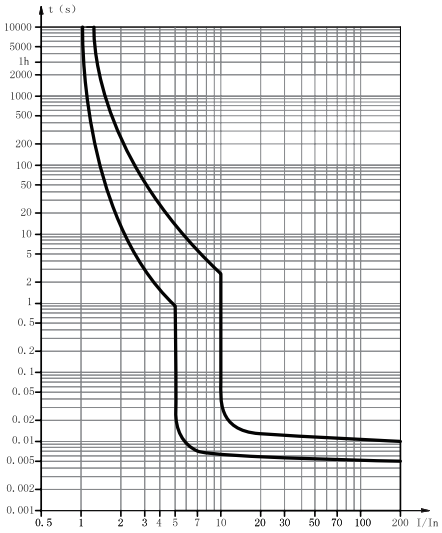

C type protection characteristic curve

TGB1N-63(A) Series, 6(4.5)KA MCB

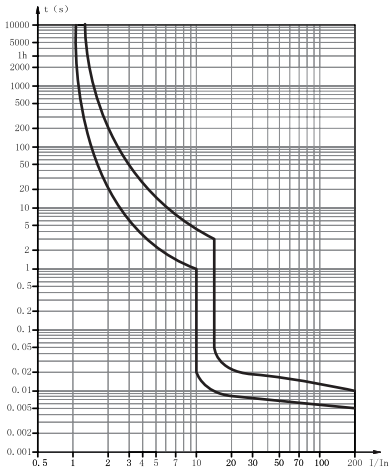

D type protection characteristic curve

3.4 Wiring: Suitable for wire connection of 25mm^2 and below (see Table 3). The wiring method is that the wire is fixed with screws according to the tightening torque 2.5N·m.

Table 3

Rated current (A)	Wire cross area (mm^2)
1 ～ 6	1
10	1.5
16 ～ 20	2.5
25	4
32	6
40 ～ 50	10
63	16

4 Outline and Installation Dimensions

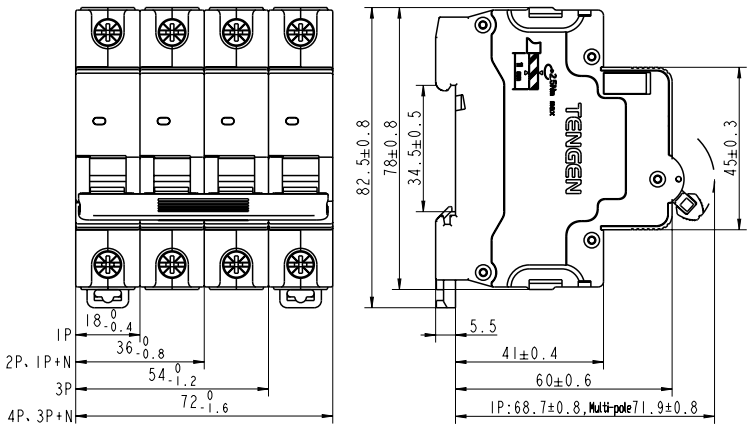

5 Ordering Notice

5.1 Please specify the product model, specification, rated current, number of poles, and order quantity when ordering.

5.2 Order example: TGB1N-63 miniature circuit breaker, C-type instantaneous release, rated current 32A, two-pole, 1,000 units.

Specified as: TGB1N-63 2P C32 1,000 units

TGB1N-63(A)P Series, 4.5(3)KA MCB

1 Overview

TGB1N-63(A)P miniature circuit breaker (hereinafter referred to as circuit breaker) is primarily used in the AC 50/60Hz power line facilities and electrical equipment with the rated voltage 230V/400V and with the rated current up to 63A in households and similar places for overload and short circuit protection, and is also used as for infrequent on-off operations. It is particularly suitable for lighting and distribution systems in industry and commerce.

2 Type Designation

TG B 1N – 63 AP 1P+N C 63

- 63 — Rated current (A)
- C — Instantaneous trip type (B/C/D)
- 1P+N — Number of poles(1P/1P+N/2P/3P/3P+N/4P)
- AP — Breaking capacity: AP means 4.5kA; P means 3kA
- 63 — Frame rated current (A): 63
- 1N — Design code
- B — Miniature circuit breakers
- TG — Enterprise code

3 Product Parameters

3.1 Main technical parameters of the product (see Table 1)

Table 1

Product name	TGB1N-63AP	TGB1N-63P
Standard	IEC60898-1	
Product certification	CE, TUV, CB	
Electrical characteristics		
Number of poles	1P, 1P+N, 2P, 3P, 3P+N, 4P (N pole can be opened and closed)	
Rated frequency (Hz)	50/60	
Frame current (A) Inm	63	
Rated current (A) Ie	1, 2, 3, 4, 5, 6, 10, 16, 20, 25, 32, 40, 50, 63	
Rated voltage (V) Ue	AC230/400(1P) AC230(1P+N) AC400(2P, 3P, 3P+N, 4P)	
Rated insulation voltage (V) Ui	690	
Rated impulse withstand voltage (kV) Uimp	4	
Rated short circuit breaking capacity (kA) Icn	4.5	3
Instantaneous trip characteristics	B(3In ～ 5In) C(5In ～ 10In) D(10In ～ 14In)	
Trip form	Thermal magnetic trip	
Pollution degree	2	

TGB1N-63(A)P Series, 4.5(3)KA MCB

Table 1, continued

Product name	TGB1N-63AP	TGB1N-63P
Electrical and mechanical accessories	MX: Shunt release OF: Aux. contact SD: Alarm contact MX+OF: Shunt+ Aux. release MV: Overvoltage release MN: Undervoltage release MV+MN: Over-undervoltage release MNS: Voltage loss release	
Mechanical characteristics		
Electrical life (times)	10000	
Mechanical life (times)	20000	
Protection grade	IP20	
Normal working conditions and installation characteristics		
Ambient temperature	-35°C~ +70°C	
Installation altitude	Not exceed 2000m	
Wiring terminal	Pressed by screw	
Max. wiring capacity (mm²)	25	
Max. ultimate torque (Nm)	2.5	
Installation category	Class II, III	
Installation method	TH35-7.5 standard rail	
Inlet method	Top and botom inlets	

3.2 Operating characteristics of circuit breaker overcurrent release (see Table 2)

Table 2

No.	Test current (A)	Start state	Specified time	Expected results	Remarks
a	1.13In	Cold state	t≤1h	Non-trip	
	1.45In	1.13In test followed	t ＜ 1h	Trip	Current rises to the specified value stably within 5s
	2.55In	Cold state	1s < t < 60s (For In ≤ 32A) 1s < t < 120s (For In > 32A)	Trip	
b	3In	Cold state	t≤0.1s	Non-trip	Turn on aux. switch to power on the current
	5In	Cold state	t ＜ 0.1s	Trip	
c	5In	Cold state	t≤0.1s	Non-trip	Turn on aux. switch to power on the current
	10In	Cold state	t ＜ 0.1s	Trip	
d	10In	Cold state	t≤0.1s	Non-trip	Turn on aux. switch to power on the current
	14In	Cold state	t ＜ 0.1s	Trip	

Note: Cold state refers to no load at the 30°C temperature before test.

TGB1N-63(A)P Series, 4.5(3)KA MCB

3.3 Circuit breaker protection characteristic curve

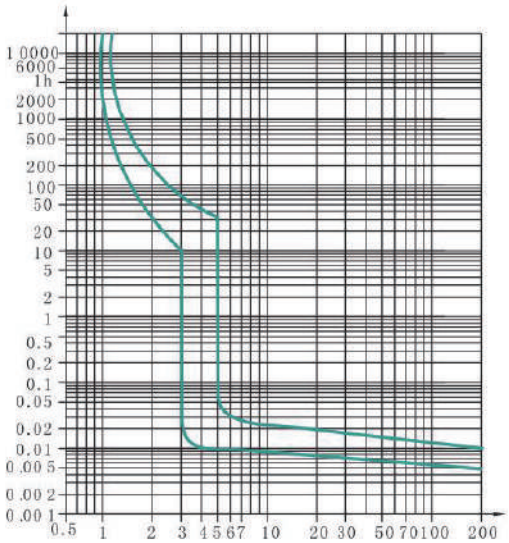

B type protection characteristic curve

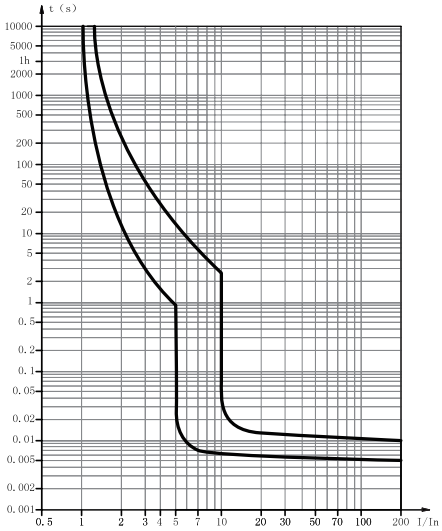

C type protection characteristic curve

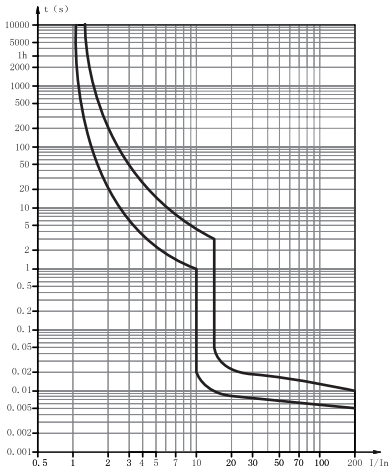

D type protection characteristic curve

3.4 Wiring: Suitable for 25mm^2 and below wire connection (see Table 3), the wiring is connected through screws and the tightening torque is 2.5N.m.

Table 3

Rated current (A)	Sectional area of wire (mm^2)
1 ~ 6	1
10	1.5
16 ~ 20	2.5
25	4
32	6
40 ~ 50	10
63	16

TGB1N-63(A)P Series, 4.5(3)KA MCB

4 Installation Dimensions

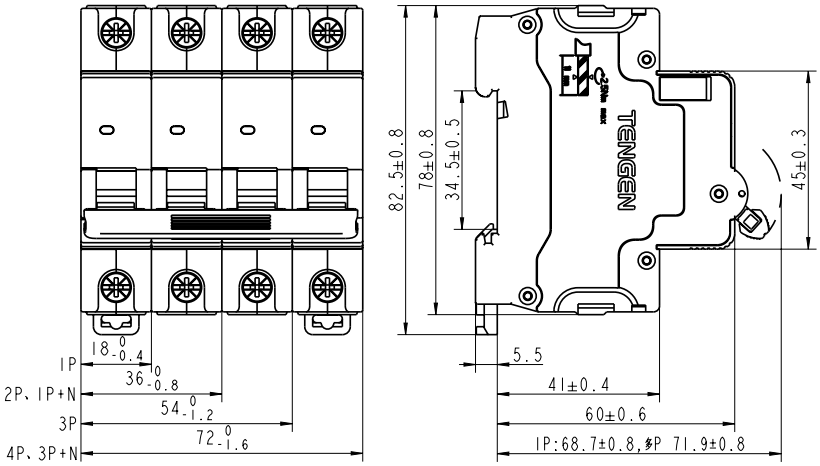

5 Ordering Notice

5.1 Please specify the product model, specification, rated current, number of poles, and order quantity when ordering.

5.2 Order example: TGB1N-63AP miniature circuit breaker, C-type instantaneous release, rated current 32A, 1000 two-pole units

Please specify: TGB1N-63AP 2P C32 1000 units

TGB1N-125(H) Series, 6(10)KA MCB

1 Overview

TGB1N-125(H) miniature circuit breaker (hereinafter referred to as circuit breaker) is mainly used in the AC 50/60Hz line with rated working voltage 230V/400V and rated current 125A and below for overload, short circuit, and isolation protection, and suitable for infrequent power-on and power-off of electrical devices and lighting lines.

2 Type Designation

TG B 1N -125 H 2P C 100

- 100 — Rated current (A)
- C — Instantaneous trip characteristic type (B/C/D)
- 2P — Number of poles (1P/2P/3P/4P)
- H — Breaking capacity: H: 10kA Not marked: 6kA
- 125 — Frame current (A): 125
- 1N — Design code.
- B — Miniature Circuit Breaker
- TG — Enterprise code

3 Technical Parameters

3.1 The main technical parameters of the product (see Table 1)

Table 1

Product name	TGB1N-125	TGB1N-125H
Standard	IEC/EN60947-2	
Certificate	CE CB TUV	
Electrical characteristics		
Number of poles	1P, 2P, 3P, 4P	1P, 2P, 3P, 4P
Rated frequency (Hz)	50/60	50/60
Frame current (A) Inm	125	125
Rated current (A) Ie	63, 80, 100, 125	63, 80, 100, 125
Rated voltage (V) Ue	AC230(1P, 2P) AC400(2P, 3P, 4P)	AC230(1P, 2P) AC400(2P, 3P, 4P)
Rated insulation voltage (V) Ui	690	690
Rated impulse withstand voltage (kV) Uimp	4	4
Rated short-circuit breaking capacity (kA) Ics	6	7.5
Rated short-circuit breaking capacity (kA) Icu	6	10
Instantaneous trip characteristics	B(5In±20%) C(8In±20%) D(12In±20%)	B(5In±20%) C(8In±20%) D(12In±20%)
Trip form	Thermal magnetic trip	Thermal magnetic trip
Pollution degree	3	3

TGB1N-125(H) Series, 6(10)KA MCB

Table 1, continued

Product name	TGB1N-125	TGB1N-125H
Electrical and mechanical accessories	MX1: Shunt release OF1: Auxiliary contact SD1: Alarm contact MX+OF1: Shunt release + auxiliary contact MV1: Overvoltage release MV+MN1: Overvoltage and undervoltage release	MX1: Shunt release OF1: Auxiliary contact SD1: Alarm contact MX+OF1: Shunt release + auxiliary contact MV1: Overvoltage release MV+MN1: Overvoltage and undervoltage release
Mechanical properties		
Electrical life (times)	6000 (In ≤ 100A) 4000(In=125A)	6000 (In ≤ 100A) 4000(In=125A)
Mechanical life (times)	20,000 times	20,000 times
Protection grade	IP20	IP20
Normal operation conditions and installation characteristics		
Ambient temperature	-35°C ～ +70°C	-35°C ～ +70°C
Installation site altitude	≤2,000 meters	≤2,000 meters
Terminals	Fixed with screws	Fixed with screws
Maximum wiring capacity (mm²)	50	50
Maximum limit torque (Nm)	3.5	3.5
Installation category	Class III	Class III
Installation method	TH35-7.5 standard rail	TH35-7.5 standard rail
Incoming method	Top inlet and bottom inlet	Up and down

3.2 Action characteristics of circuit breaker overcurrent release (see Table 2)

Table 2

No.	Test current (A)	Start state	Set time		Expected result	Remarks
			In≤63A	In>63A		
a	1.05In	Cold state	t≥1h	t≥2h	Not trip	
	1.3In	Immediately after 1.05In test	t < 1h	t < 2h	trip	The current rises to the specified value within 5s stably
b	(B)Ii:4In	Cold state	t≥0.2s		Not trip	Turn on the auxiliary switch for making current
	(C)Ii:6.4In					
	(D)Ii:9.6In					
c	(B)Ii:6In		t < 0.2s		trip	Turn on the auxiliary switch for making current
	(C)Ii:9.6In					
	(D)Ii:14.4In					

Note: The cold state refers to the temperature 30°C without load before the test.

TGB1N-125(H) Series, 6(10)KA MCB

3.3 Protection characteristic curve of circuit breaker

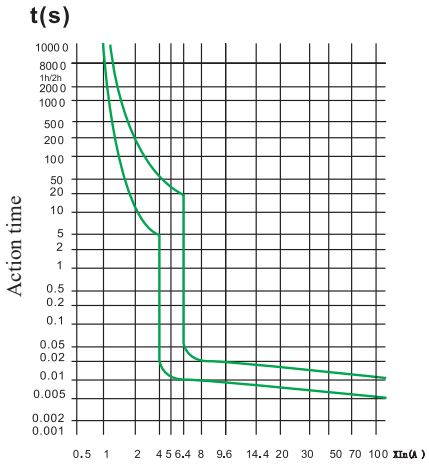

B Type protection characteristic curve

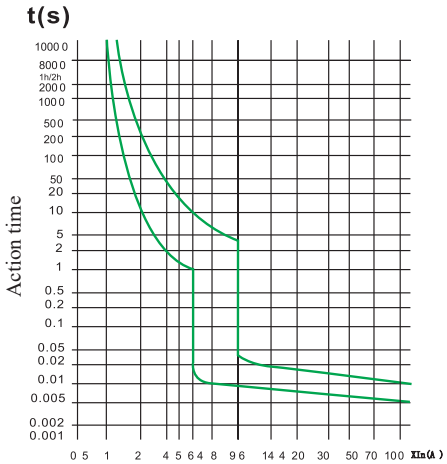

C Type protection characteristic curve

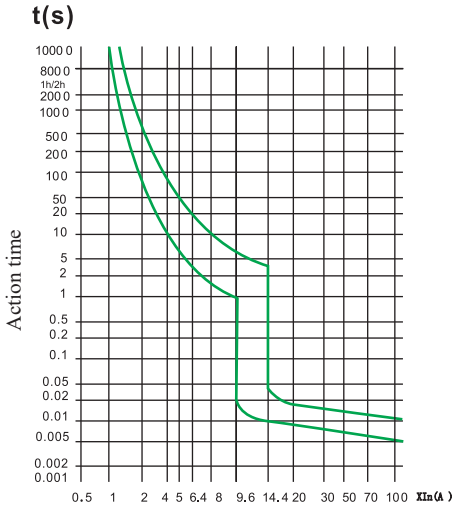

D Type protection characteristic curve

3.4 Wiring: Suitable for wire connection of 50mm^2 and below (see Table 3). The wiring method is that the wire is fixed with screws according to the tightening torque 3.5N·m.

Table 3

Rated current (A)	Wire cross area (mm²)
63	16
80	25
100	35
125	50

TGB1N-125(H) Series, 6(10)KA MCB

4 Outline and Installation Dimensions

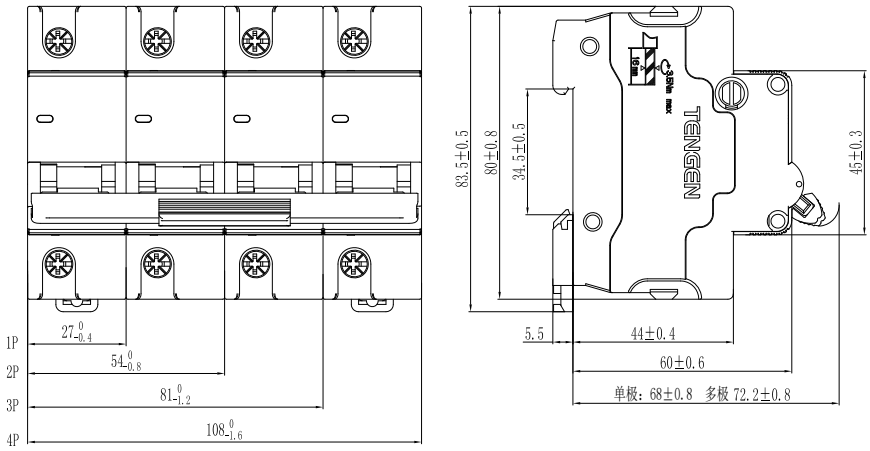

5 Ordering Notice

5.1 Please specify the product model, specification, rated current, number of poles, and order quantity when ordering.

5.2 Order example: TGB1N-125 miniature circuit breaker, C-type instantaneous release, rated current 100A, two poles, 1,000 sets.
Specified as: TGB1N-125 2P C100 1,000 units

TGB3-40 Series, 6KA DPN MCB

1 Overview

TGB3-40 miniature circuit breaker is suitable for AC 50/60Hz power line facilities and electrical equipment with rated voltage 230V and with rated current up to 40A in buildings and similar sites for overload and short-circuit protection.It is also used for infrequent ON/OFF operation, especially for civil and commercial lighting distribution system.

2 Type Designation

TG B 3 - 40 1P+N C 16

- 16 — Rated current (A)
- C — Trip curve: B, C, D
- 1P+N — Number of poles: 1P+N (N pole can be closed)
- 40 — Frame current (A)
- 3 — Design code
- B — Miniature circuit breaker
- TG — Enterprise code

3 Technical Parameters

3.1 Main technical parameters (see Table 1)

Table 1

Product name		TGB3-40
Standard		IEC60898-1
Certification		CE, CB
Electrical characterustics		
Number of poles		1P+N (N pole can be closed)
Rated frequency (Hz)		50/60
Frame current (A)	Inm	40
Rated currnt (A)	Ie	6, 10, 16, 20, 25, 32, 40
Rated voltage (V)	Ue	AC230
Rated insulation voltage (V)	Ui	500
Rated impulse withstand voltage (kV)	Uimp	4
Rated run short circuit breaking capacity (kA)	Ics	6
Rated short circuit capacity (kA)	Icn	6
Instantaneous trip characteristics		B,C,D
Trip form		Thermomagnetic trip
Pollution degree		2
Electrical and mechanical accessories		-
Mechanical properties		
Electrical life		10,000 times
Mechanical life		20,000 times
Protection grade		IP20
Indication window		Contact status indication
Operation conditions		
Ambinet temperature		-35°C - +70°C
Installation site altitude		Not exceed 2,000 meters
Wiring terminal		Wired with screws
Maximum wiring capacity		10 mm^2
Maximum ultimate torque		1.8
Installation category		Class II, III
Installation method		TH35-7.5 steel mounting rail
Incoming method		Top and bottom

TGB3-40 Series, 6KA DPN MCB

3.2 Structure features: This product is a two-pole (1P+N) circuit breaker with an overcurrent release installed on the phase line rather than the neutral pole. Compared with the common DZ47 series 2-pole circuit breaker, this product has advantages of small size, light weight, artistic appearance, and low price, suitable for power distribution system in residential buildings.

3.3 Operation properties of overcurrent release of circuit breaker (see Table 2)

Table 2

No.	Test current (A)	Starting state	Test current (A)	Specified time	Expected results	Remarks
a	All specificaitons	Cold state	1.13In	t≤1h	Non trip	
b	All specificaitons	After test a)	1.45In	t<1h	Trip	Current rises to the specified value within 5s after Item a)
c	≤32	Cold	2.55In	1s<t<60s	Trip	
	>32			1s<t<120s	Trip	
d	All specificaitons	Cold state	3In (curve B)	t≤0.1s	Non trip	Turn on the auxiliary switch for current making
			5In (curve C)			
			10In (curve e D)			
e	All specificaitons	Cold state	5In (curve B)	t<0.1s	Trip	Turn on the auxiliary switch for current making
			10In (curve C)			
			14In (curve D)			

Note: Cold state refers to 30℃ without load before test.

3.4 Circuit breaker protection characteristic curve

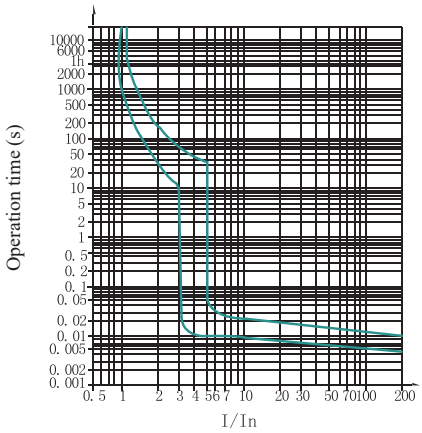

B type protection characteristic curve

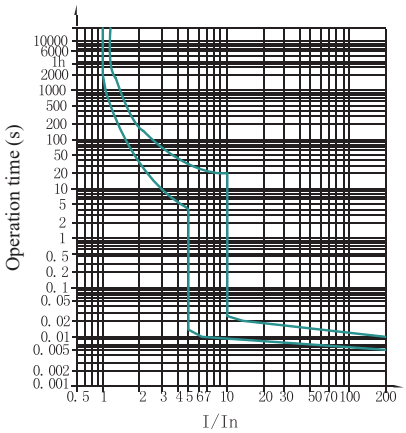

C type protection characteristic curve

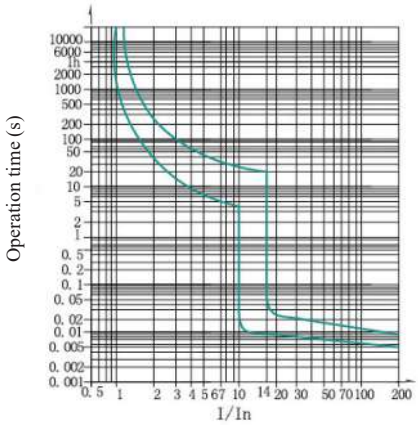

D type protection characteristic curve

TGB3-40 Series, 6KA DPN MCB

3.5 Wiring: Suitable for connection of wire of 10mm^2 and below (see Table 3), the wiring method is connection with screws according to the torque 1.2N.m

Table 3

Rated current In (A)	Nominal section area of copper wire (mm^2)
6	1
10	1.5
16, 20	2.5
25	4
32	6
40	10

4 Outline and Installation Dimensions

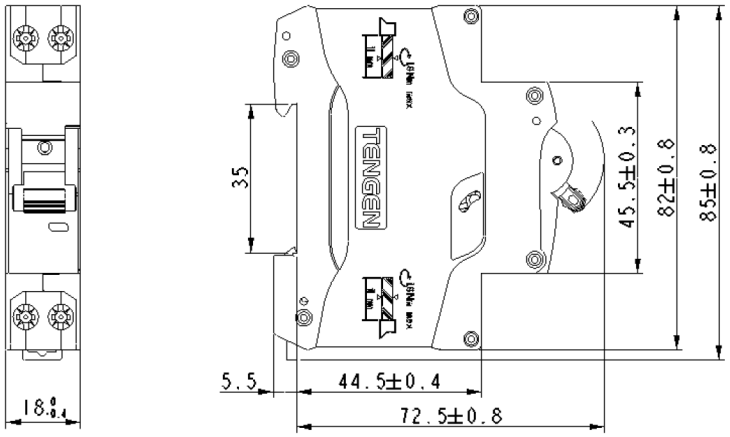

5 Order Notice

5.1 Please specify the model and specification of product, instantaneous release type and rated current, number of poles, and order quantity.

5.2 Order example: TGB3-40 miniature circuit breaker, C type instantaneous release, rated current 32A, 1,000 pcs

Please specify: TGB3-40 C32 1,000 pcs

TGB3(H)-63 Series, 6(10)KA MCB

1 Overview

TGB3(H)-63 miniature circuit breaker is used in the 50/60Hz power line with rated voltage 230/400V and rated current up to 63A in household and similar places for overload and short circuit protection and suitable for infrequent breaking and making operation, especially suitable for industrial and commercial lighting distribution systems.

2 Type Designation

TG B 3 H - 63 1P C 16 OF2

- OF2: Additional information: MX2: shunt release; OF2: auxiliary contact; SD2: alarm auxiliary contact; MV+MN2: overvoltage and undervoltage accessories
- 16: Rated current (A)
- C: Instantaneous Trip characteristic type: B, C, D
- 1P: Number of poles: 1P, 2P, 3P, 4P
- 63: Frame current (A)
- H: Breaking capacity: H: 10kA No mark: 6kA
- 3: Design code.
- B: Miniature Circuit Breaker
- TG: Enterprise code

3 Technical Parameters

3.1 The main technical parameters of the product (see Table 1)

Table 1

Product name		TGB3-63	TGB3H-63
Certificate		CE	CE
Electrical characteristics			
Number of poles		1P,2P,3P,4P	1P,2P,3P,4P
Rated frequency (Hz)		50/60	50/60
Frame current (A)	Inm	63	63
Rated current (A)	In	1,2,3,4,5,6,10,16,20,25,32,40,50,63	1,2,3,4,5,6,10,16,20,25,32,40,50,63
Rated voltage (V)	Ue	AC230/400(1P) AC400(2P,3P,4P)	AC230/400(1P) AC400(2P,3P,4P)
Rated insulation voltage (V)	Ui	690	690
Rated impulse withstand voltage (kV)	Uimp	4	4
Rated short-circuit breaking capacity (kA)	Ics	6	7.5
Rated short-circuit breaking capacity (kA)	Icn	6	10
Instantaneous trip characteristics		B,C,D	B,C,D
Trip form		Thermal magnetic trip	Thermal magnetic trip
Pollution degree		2	2
Electrical and mechanical accessories		MV+MN2 (overvoltage and undervoltage), OF2 (auxiliary), SD2 (alarm), MX2 (shunt)	MV+MN2 (overvoltage and undervoltage), OF2 (auxiliary), SD2 (alarm), MX2 (shunt)
Mechanical properties			
Electrical life		10,000 times	10,000 times
Mechanical life		20,000 times	20,000 times
Protection grade		IP20	IP20
Indicator window		Contact status indication	Contact status indication
Normal operation conditions and installation characteristics			
Ambient temperature		-35℃ ~ +70℃	-35℃ ~ +70℃
Installation site altitude		≤ 2,000 meters	≤ 2,000 meters
Terminals		Fixed with screw	Fixed with screw
Maximum wiring capacity		$25mm^2$	$25mm^2$
Maximum limit torque Nm		2.5	2.5
Installation category		Class II, III	Class II, III
Installation method		TH35-7.5 steel mounting rail	TH35-7.5 steel mounting rail
Incoming method		Top inlet and bottom inlet	Top inlet and bottom inlet

TGB3(H)-63 Series, 6(10)KA MCB

3.2 Action performance of circuit breaker overcurrent release (see Table 2)

Table 2

No.	Rated current In(A)	Start state	Test current (A)	Specified time	Expected results	Remarks
a	1-63A	Cold state	1.13 In	t ≤ 1h	Not trip	
b	1-63A	Hot state	1.45 In	t < 1h	Trip	Immediately after a) test, the current increases to the specified value within 5s.
c	≤32	Cold state	2.55 In	1s < t < 60s	Trip	
	>32			1s < t < 120s	Trip	
d	1-63A	Cold state	3In(B type)	t ≤ 0.1s	Not trip	Turn on the auxiliary switch for making current
			5In (C type)			
			10In(D type)			
e	1-63A	Cold state	5In(B type)	t < 0.1s	Trip	Turn on the auxiliary switch for making current
			10In(C type)			
			14In(D type)			

Note: The cold state refers to the temperature 30ºC without load before the test.

3.3 Protection characteristic curve of circuit breaker

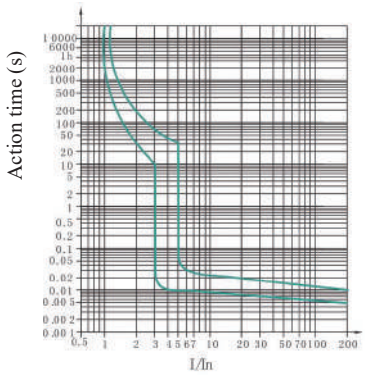

B type protection characteristic curve

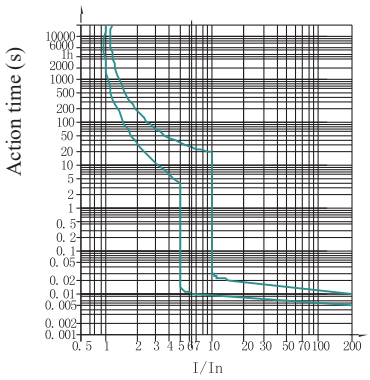

C type protection characteristic curve

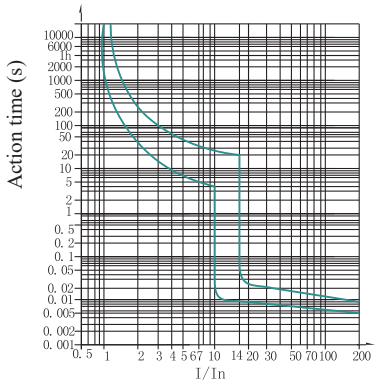

D type protection characteristic curve

TGB3(H)-63 Series, 6(10)KA MCB

3.4 Wiring: Suitable for wire connection of 25mm² and below (see Table 3). The wiring method is that the wire is fixed with screws according to the tightening torque 2.5N·m.

Table 3

Rated current (A)	Nominal cross area of copper wire (mm²)
1, 2, 3, 4, 5, 6	1
10	1.5
16, 20	2.5
25	4
32	6
40, 50	10
63	16

4 Outline and Installation Dimensions

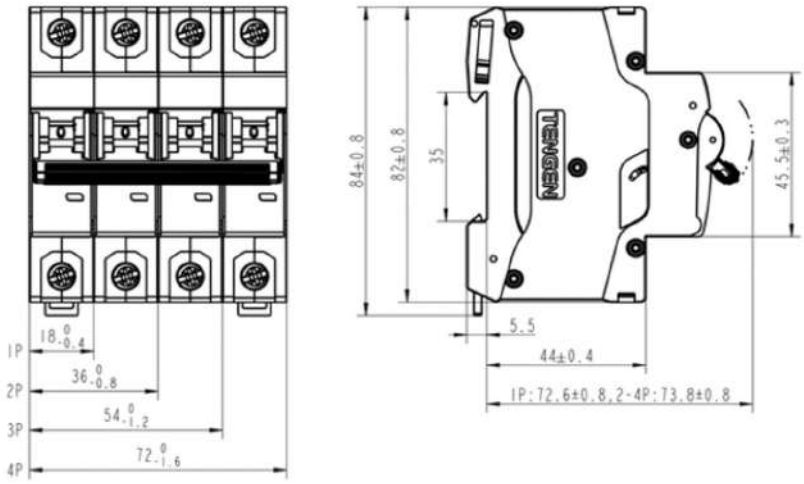

5 Ordering Notice

5.1 Please specify the product model and specification, and the type, rated current, number of poles, and order quantity of the instantaneous release when ordering.

5.2 Order example: TGB3(H) series miniature circuit breaker, breaking capacity 10kA, C-type instantaneous release, rated current 32A, two-pole, 1,000 units.
Specified as: TGB3H-63 C32 2P 1,000 units

TGB3-63(H)DC Series, 6(10)KA MCB

1 Overview

TGB3-63(H)DC Miniature circuit breaker (hereinafter referred to as circuit breaker) is primarily used in the DC power line facilities and electrical equipment with a rated voltage of 1000V and a rated current up to 63A for overload and short circuit protection, and can also be used for infrequent conversion or on-off of the line, and it is also used as a switch disconnector, especially suitable for low-voltage terminal power distribution systems in the fields of industry, energy, communication and infrastructure.

The products has dual wiring function, and the output end can easily connect standard busbars and soft and hard wires.

The product complies with the EN/IEC60947-2 standard.

2 Type Designation

TG B 3 - 63 (H) DC □ □ □ _

- Rated current(A)
- Product instantaneous trip type (B/C/D)
- Number of poles (1P/2P/3P/4P)
- With polarity DC
- "H": High breaking type, 10kA (Dual busbar)
  By default: Common type 6 kA
- Frame rated current
- Design code
- Circuit breaker
- Enterprise code

3 Technical Parameters

3.1 Main technical parameters of product (see Table 1)

(Table 1)

Product name	TGB3-63(H)DC
Standard	EN/IEC60947-2
Product certification	TUV, CE
Electrical characteristics	
Number of poles	1P, 2P, 3P, 4P
Frame rated current (A) Inm	63
Rated current (A) Ie	1, 2, 3, 4, 5, 6, 10, 16, 20, 25, 32, 40, 50, 63
Rated voltage (V) Ue	DC250(1P) DC500(2P) DC750(3P) DC1000(4P)
Rated insulation voltage (V) Ui	1000
Rated impulse withstand voltage (kV) Uimp	6
Rated limit short circuit breaking capacity (kA) Icu	6, H:10kA
Rated operating short circuit breaking capacity(kA) Ics	6, H:7.5kA

TGB3-63(H)DC Series, 6(10)KA MCB

(Table 1, continued)

Product name	TGB3-63(H)DC
Instantaneous trip characteristic	B(6In±20%) C(10In±20%) D(14In±20%)
Trip type	Thermomagnetic trip
Pollution degree	3
Electrical and mechanical accessories	OF3: Aux. contact SD3: Alarm contact MX3: Shunt release MX+OF3: Shunt + Aux. release MV3: Overvoltage Release MN3: Undervoltage release MV+MN3: Over/undervoltage release
Mechanical properties	
Electrical life (times)	1500
Mechanical life (times)	20000
Protection grade	IP20
Normal working conditions and installation characteristics	
Ambient temperature	-35ºC+70ºC
Installation altitude	Not more than 2000m
Terminal block	Screw crimping
Max. wiring capacity (mm^2)	16
Max. limit torque (N.m)	2.5
Installation category	Class II, III
Installation method	TH35-7.5 standard rail

3.2 Operation characteristics of circuit breaker overcurrent release (see Table 2)

(Table 2)

Instantaneous trip type	Test current (A)	Start state	Trip or non-trip limit time	Expected results	Remarks
B type, C type, D type	1.05In	Cold state	t≤1h	Non-trip	
	1.3In	Followed by 1.05In test	t≤1h	Trip	The current rises to the specified value within 5s
B type	4.8In	Cold state	t≤0.2s	Non-trip	Turn on the aux. switch for current marking
	7.2In	Cold state	t < 0.2s	Trip	
C type	8In	Cold state	t≤0.2s	Non-trip	Turn on the aux. switch for current marking
	12In	Cold state	t < 0.2s	Trip	
D type	11.2In	Cold state	t≤0.2s	Non-trip	Turn on the aux. switch for current marking
	16.8In	Cold state	t < 0.2s	Trip	
Note: "Cold state" refers to no load before test under the reference temperature +40°C.					

TGB3-63(H)DC Series, 6(10)KA MCB

3.3 Protection characteristic curve of circuit breaker

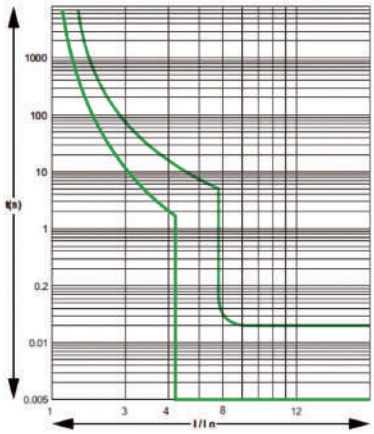

B type protection characteristic curve

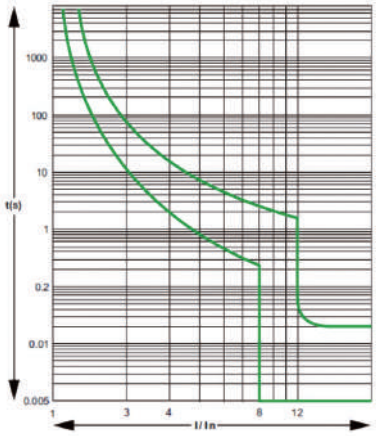

C-type protection characteristic curve

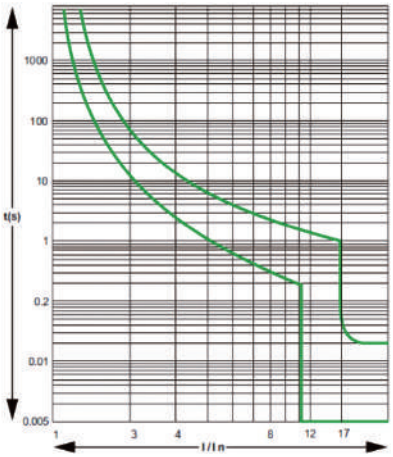

D-type protection characteristic curve

3.4 Wiring: It is suitable for wire connection of 25mm2 and below (see Table 3), and the wiring method is screw crimping wiring method and the torque is 2.5N·m.

(Table 3)

Rated current (A)	Cross-sectional area of wire (mm²)
1 ～ 6	1
10	1.5
16 ～ 20	2.5
25	4
32	6
40 ～ 50	10
63	16

TGB3-63(H)DC Series, 6(10)KA MCB

3.5 Wiring method

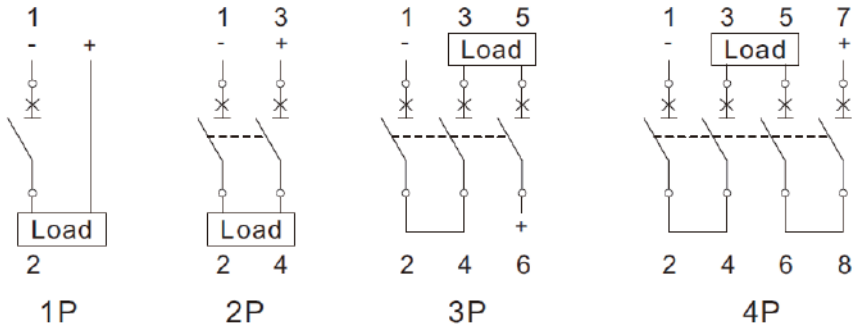

4 Outline and Installation Dimensions

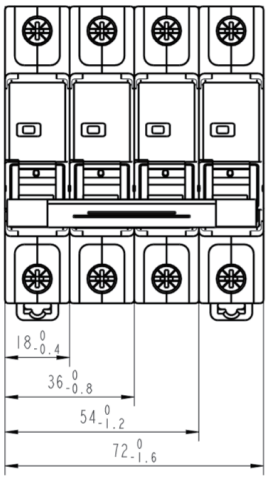

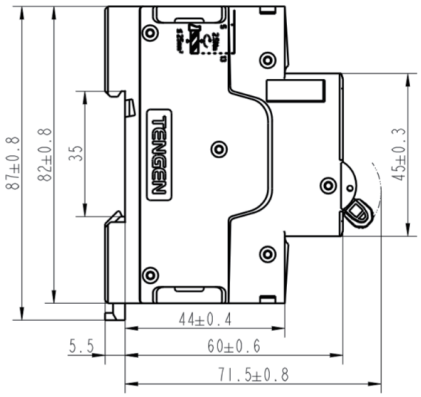

5 Ordering Notice

5.1 Product model and name, such as: TGB3-63DC miniature circuit breaker;

5.2 The number of poles of the product, such as 2P

5.3 Instantaneous trip type of product, such as C type

5.4 Rated current of the product, such as 63A

5.5 Order quantity, such as 100 units

5.6 Order example: TGB3-63DC 2P C63, 100 units

TGB3-63HZ Series, 10KA DC MCB

1 Overview

TGB3-63HZ DC miniature circuit breaker (hereinafter referred to as circuit breaker) is primarily used in the DC power line facilities and electrical equipment with a rated voltage up to1000V and a rated current up to 63A for overload and short circuit protection, and can also be used for infrequent conversion or on-off of the line, and it is also as disconnector. It is especially suitable for low-voltage terminal power distribution systems in fields of photovoltaic, industrial, energy, communication and infrastructure construction.

The products has dual wiring function, and the output end can easily connect standard busbars and soft and hard wires.

The product complies with the EN/IEC60947-2 standard.

2 Type Designation

TG B 3 - 63 H Z □ □ □ —

- Rated current(A)
- Product instantaneous trip type (B/C/D)
- Number of poles (1P/2P/3P/4P)
- No polarity DC
- High breaking (Dual busbar)
- Frame rated current
- Design code
- Circuit breaker
- Enterprise code

3 Technical Parameters

3.1 Main technical parameters of product (see Table 1)

(Table 1)

Product name	TGB3-63HZ
Standard	EN/IEC60947-2
Product certification	TUV, CE
Electrical characteristics	
Number of poles	1P, 2P, 3P, 4P
Frame rated current (A) Inm	63
Rated current (A) Ie	6, 10, 16, 20, 25, 32, 40, 50, 63
Rated voltage (V) Ue	DC250(1P) DC500(2P) DC750(3P) DC1000(4P)
Rated insulation voltage (V) Ui	1000
Rated impulse withstand voltage (kV) Uimp	6
Rated limit short circuit breaking capacity (kA) Icu	10
Rated operating short circuit breaking capacity(kA) Ics	7.5kA
Instantaneous trip characteristic	B(6In±20%) C(10In±20%) D(14In±20%)

TGB3-63HZ Series, 10KA DC MCB

(Table 1, continued)

Product name	TGB3-63HZ
Trip type	Thermomagnetic trip
Pollution degree	2
Electrical and mechanical accessories	OF3: Aux. contact SD3: Alarm contact MX3: Shunt release MX+OF3: Shunt + Aux. release MV3: Overvoltage Release MN3: Undervoltage release MV+MN3: Over/undervoltage release
Mechanical properties	
Electrical life (times)	1500
Mechanical life (times)	20000
Protection grade	IP20
Normal working conditions and installation characteristics	
Ambient temperature	-35ºC+70ºC
Installation altitude	Not more than 2000m
Terminal block	Screw crimping
Max. wiring capacity (mm^2)	16
Max. limit torque (N.m)	2.5
Installation category	Class II, III
Installation method	TH35-7.5 standard rail

3.2 Operation characteristics of circuit breaker overcurrent release (see Table 2)

(Table 2)

Instantaneous trip type	Test current (A)	Start state	Trip or non-trip limit time	Expected results	Remarks
B type, C type, D type	1.05In	Cold state	t≤1h	Non-trip	
	1.3In	Followed by 1.05In test	t≤1h	Trip	The current rises to the specified value within 5s
B type	4.8In	Cold state	t≤0.2s	Non-trip	Turn on the aux. switch for current marking
	7.2In	Cold state	t < 0.2s	Trip	
C type	8In	Cold state	t≤0.2s	Non-trip	Turn on the aux. switch for current marking
	12In	Cold state	t < 0.2s	Trip	
D type	11.2In	Cold state	t≤0.2s	Non-trip	Turn on the aux. switch for current marking
	16.8In	Cold state	t < 0.2s	Trip	
Note: "Cold state" refers to no load before test under the reference temperature +40ºC.					

TGB3-63HZ Series, 10KA DC MCB

3.3 Protection characteristic curve of circuit breaker

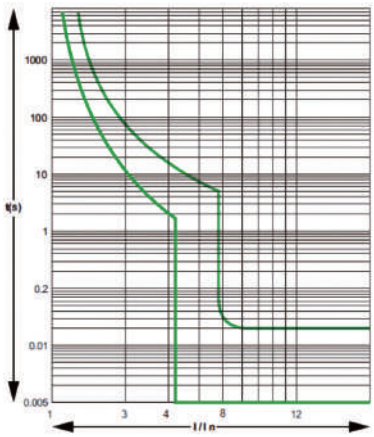

B type protection characteristic curve

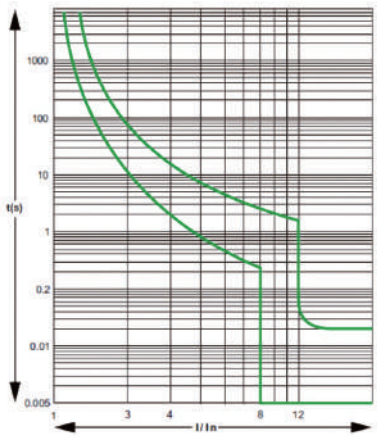

C-type protection characteristic curve

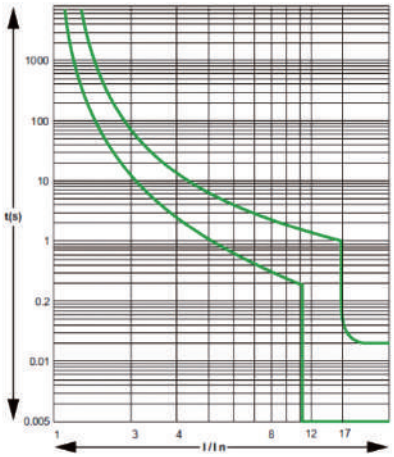

D-type protection characteristic curve

3.4 Wiring: It is suitable for wire connection of 25mm^2 and below (see Table 3), and the wiring method is screw crimping wiring method and the torque is 2.5N·m.

(Table 3)

Rated current (A)	Cross-sectional area of wire (mm²)
1 ～ 6	1
10	1.5
16 ～ 20	2.5
25	4
32	6
40 ～ 50	10
63	16

TGB3-63HZ Series, 10KA DC MCB

3.5.1 Upper inlet

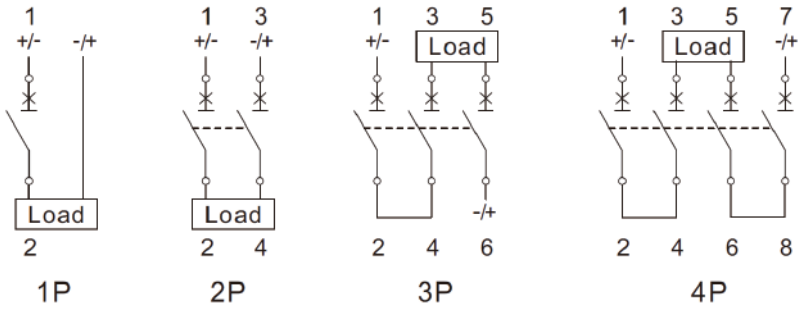

3.5.2 Lower inlet

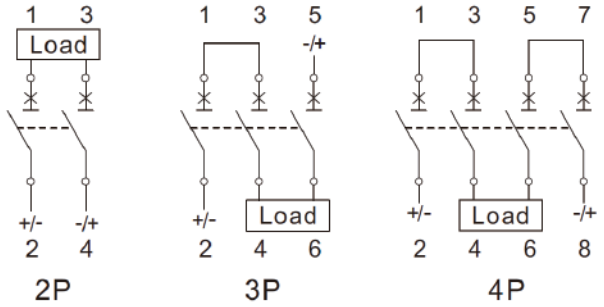

4 Outline and Installation Dimensions

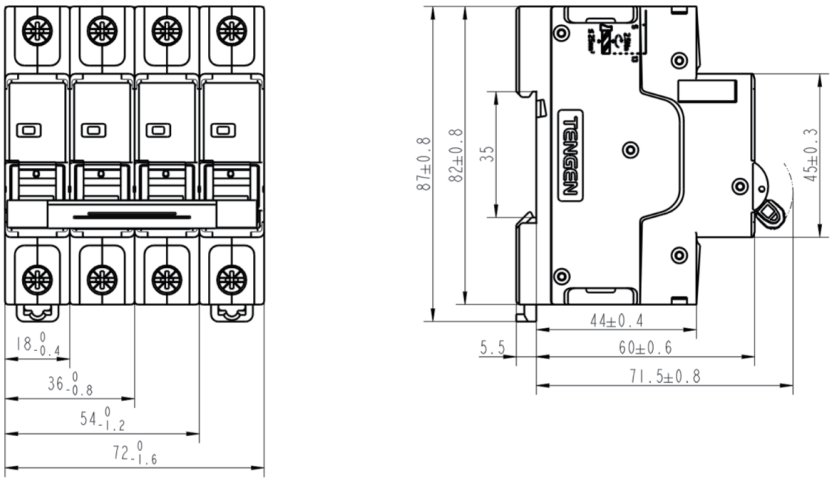

5 Ordering Notice

5.1 Product model and name, such as: TGB3-63HZ miniature circuit breaker;

5.2 The number of poles of the product, such as 2P

5.3 Instantaneous trip type of product, such as C type

5.4 Rated current of the product, such as 63A

5.5 Order quantity, such as 100 units

5.6 Order example: TGB3-63HZ 2P C63, 100 units

TGB3-63(H) Series, 6(10)KA AC MCB

1 Overview

TGB3-63 (H) miniature circuit breaker (hereinafter referred to as circuit breaker) is mainly used in the AC 50/60Hz power line facilities and electrical equipment with rated voltage up to 240V/415V, or DC rated voltage up to 80V, and rated current up to 63A for overload and short circuit protection, and it can also be used for infrequent on-off operation and is used as switch disconnect, especially suitable for industrial and commercial lighting and power distribution systems.
The products has dual wiring function, and the output end can easily connect standard busbars and soft and hard wires.
The products comply with EN/IEC 60898-1 and EN/IEC 60898-2 standards.

2 Type Designation

TG B 3 – 63 (H) □ □ □

- Rated current (A)
- Product instantaneous trip type (B/C/D)
- Number of poles (1P/1P+N/2P/3P/3P+N/4P)
- "H": High breaking type 10kA (Dual busbar)
  Default: 6kA
- Frame rated current
- Design code
- Circuit breaker
- Enterprise code

3 Technical Parameters

3.1 Main technical parameters of product (see Table 1)

(Table 1)

Product name	TGB3-63 (H)
Standard	EN/IEC 60898-1, EN/IEC 60898-2
Product certification	TUV, CE
Electrical characteristics	
Number of poles	1P, 1P+N, 2P, 3P, 3P+N, 4P
Rated frequency (Hz)	50/60
Frame rated current (A) Inm	63
Rated current: (A) Ie	1, 2, 3, 4, 5, 6, 10, 16, 20, 25, 32, 40, 50, 63
Rated voltage (V) Ue	AC230/400V (1P) AC230V (1P+N) AC400V (2P, 3P, 3P+N, 4P) DC60/80V (1P, 2P)
Rated insulation voltage (V)Ui	690
Rated impulse withstand voltage (kV)Uimp	6
Rated short circuit breaking capacity (kA) Icn	6, H:10
Rated operating short-circuit breaking capacity (kA) Ics	6, H:7.5
Instantaneous trip characteristic	AC: B (3In~5In) C (5In~10In) D (10In~14In) DC: B (4In~7In) C (7In~15In)
Trip form	Thermomagnetic trip

TGB3-63(H) Series, 6(10)KA AC MCB

(Table 1, continued)

Product name	TGB3-63 (H)
Pollution degree	2
Electrical & mechanical accessories	OF3: Aux. contacts SD3: Alarm contact OF+SD3: Aux. alarm MX3: Shunt release MX+OF3: Shunt + Aux. release MV3: Overvoltage release MN3: Undervoltage release MV+MN3: Over/undervoltage release MNS3: No-voltage release
Mechanical properties	
Electrical life (times)	AC:10000, DC:4000
Mechanical life (times)	20000
Protection grade	IP20
Normal working conditions and installation characteristics	
Ambient temperature	-35°C+70°C
Installation altitude	Not exceed 2000m
Terminal block	Pressed with screw
Max.wiring capacity (mm^2)	16
Max. limit torque (Nm)	2.5
Installation categor	Class II, III
Installation method	TH35-7.5 standard rail
Incoming method	Top and bottom inlet

3.2 Operation characteristics of circuit breaker overcurrent release (see Table 2)

(Table 2)

Instantaneous trip type	Test current (A)	Start state	Specified time	Expected results	Remarks
B type C type D type	1.13In	Cold state	t≤1h	No trip	
	1.45In	Followed by 1.13In test	t≤1h	Trip	The current rises to the specified value smoothly within 5s
	2.55In	Cold state	1s < t < 60s (for In≤32A) 1s < t < 120s (for In>32A)	Trip	
B type	AC:3In DC:4In	Cold state	1s < t≤60s (In≤32A) 1s < t≤90s (In>32A)	Non-trip	Turn on the aux. switch for making current
	AC:5In DC:7In	Cold state	t < 0.1s	Trip	
C type	AC:5In DC:7In	Cold state	1s < t≤15s (In≤32A) 1s < t≤30s (In>32A)	Non-trip	Turn on the aux. switch for making current
	AC:10In DC:15In	Cold state	t < 0.1s	Trip	
D type	10In	Cold state	t≤0.1s	Non-trip	Turn on the aux. switch for making current
	14In	Cold state	t < 0.1s	Trip	
Note: “Cold state” refers to no load before test under the reference temperature +30°C and below					

TGB3-63(H) Series, 6(10)KA AC MCB

3.3 Protection characteristic curve of circuit breaker

Setting value of the AC trip characteristic

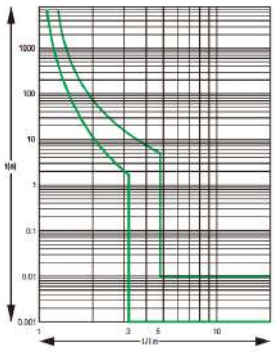

Protection Characteristic Curve for Type B

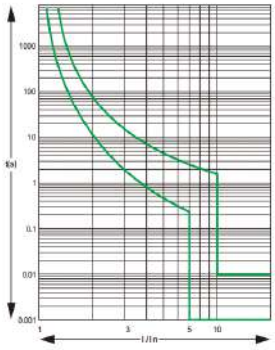

Protection Characteristic Curve for Type C

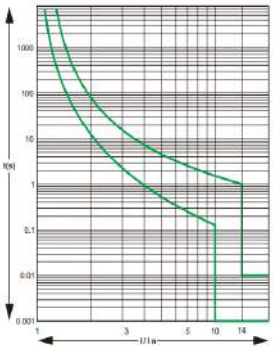

Protection Characteristic Curve for Type D

Setting value of the DC trip characteristic

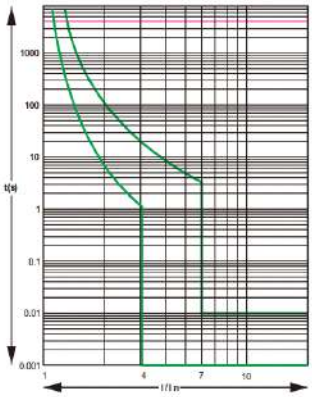

Protection Characteristic Curve for Type B

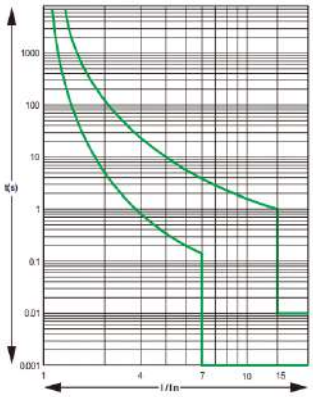

Protection Characteristic Curve for Type C

3.4 Wiring connection: It is suitable for connection of wire of 25mm^2 and below (see Table 3), the wiring method is that the wire is pressed firmly with screws, and the torque is 2.5N·m.

(Table 3)

Rated current (A)	Sectional area of wire (mm^2)
1 ~ 6	1
10	1.5
16 ~ 20	2.5
25	4
32	6
40 ~ 50	10
63	16

TGB3-63(H) Series, 6(10)KA AC MCB

4 Outline and Installation Dimensions

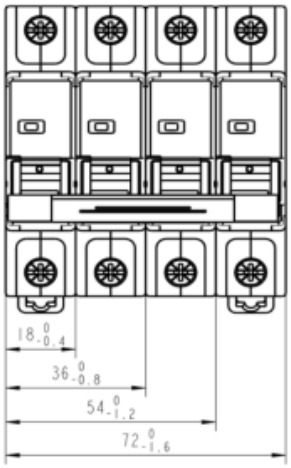

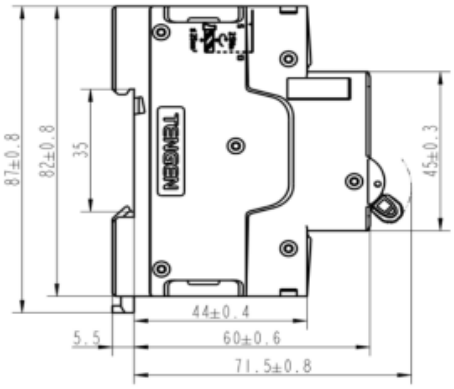

5 Ordering Notice

5.1 Model and name of product: such as: TGB3-63 miniature circuit breaker;

5.2 The number of poles of the product, such as 2P

5.3 Instantaneous trip type of product, such as Type C

5.4 The rated current of the product, such as 63A

5.5 Order quantity, such as 100 units

5.6 Order example: TGB3-63 2P C63, 100 units

TGB3Z-63(H) Series, 6(10)KA AC/DC MCB

1 Overview

TGB3Z-63 (H) Miniature circuit breaker is primarily used in the AC 50/60HZ power line facilities and electrical equipment with rated voltage up to 415V or DC rated voltage up to 500V, and rated current up to 63A for overload and short circuit protection, and it can also be used for infrequent on-off operation of the line and is used as switch disconnect, especially suitable for low voltage terminal power distribution systems in the many fields such as industry, energy, communication and infrastructure.

The products has dual wiring function, and the output end can easily connect standard busbars and soft and hard wires.

The products comply with EN/IEC 60947-2.

2 Type Designation

TG B 3 Z – 63 (H) □ □ □

- Rated current (A)
- Product instantaneous trip type (B/C/D)
- Number of poles (1P/1P+N/2P/3P/3P+N/4P)
- "H": High breaking type 10kA (Dual busbar)
  Default: 6kA
- Frame rated current
- Universal current
- Design No.
- Circuit breaker
- Enterprise code

3 Technical Parameters

3.1 Main technical parameters of product (see Table 1)

(Table 1)

Product name	TGB3Z-63 (H)
Standard	EN/IEC 60947-2
Product certification	TUV, CE
Electrical characteristics	
Number of poles	1P, 1P+N, 2P, 3P, 3P+N, 4P
Rated frequency (Hz)	50/60
Frame rated current (A) Inm	63
Rated current: (A) Ie	1, 2, 3, 4, 5, 6, 10, 16, 20, 25, 32, 40, 50, 63
Rated voltage (V) Ue	AC230/400V (1P) AC230V (1P+N) AC400V (2P, 3P, 3P+N, 4P) DC60V/110/125V (1P, 2P) DC125V/220V/250V (2P) DC330V/375V (3P) DC440V/500V (4P)
Rated insulation voltage (V)Ui	690
Rated impulse withstand voltage (kV)Uimp	6
Rated short circuit breaking capacity (kA) Icn	AC: 6, H: 10, DC: 10 (1P: 60V, 2P: 125V)
Rated operating short-circuit breaking capacity (kA) Ics	AC: 6, H: 7.5, DC: 7.5 (1P: 60V, 2P: 125V)

TGB3Z-63(H) Series, 6(10)KA AC/DC MCB

(Table 1, continued)

Product name	TGB3Z-63 (H)
Instantaneous trip characteristic	AC: B (4In±20%) C (8In±20%) D (12In±20%) DC: B (5.5In±20%) C (11In±20%) D (17In±20%)
Trip form	Thermomagnetic trip
Pollution degree	2
Electrical & mechanical accessories	OF3: Aux. contact SD3: Alarm contact OF+SD3: Aux. alarm MX3: Shunt release MX+OF3: Shunt + Aux. release MV3: Overvoltage release MN3: Undervoltage release MV+MN3: Over/undervoltage release MNS3: No-voltage release
Mechanical properties	
Electrical life (times)	AC:10000, DC:1500
Mechanical life (times)	20000
Protection grade	IP20
Normal working conditions and installation characteristics	
Ambient temperature	-35°C+70°C
Installation altitude	Not exceed 2000m
Terminal block	Pressed with screw
Max.wiring capacity (mm^2)	16
Max. limit torque (Nm)	2.5
Installation categor	Class II, III
Installation method	TH35-7.5 standard rail
Incoming method	Top and bottom inlet

3.2 Operation characteristics of circuit breaker overcurrent release (see Table 2)

(Table 2)

Instantaneous trip type	Test current (A)	Start state	Specified time	Expected results	Remarks
B type C type D type	1.05In	Cold state	t≤1h	No trip	
	1.3In	Followed by 1.13In test	t≤1h	Trip	The current rises to the specified value smoothly within 5s
B type	AC:3.2In DC:4.4In	Cold state	1s < t≤60s (In≤32A) 1s < t≤90s (In>32A)	Non-trip	Turn on the aux. switch for making current
	AC:4.8In DC:6.6In	Cold state	t < 0.1s	Trip	
C type	AC:6.4In DC:8.8In	Cold state	1s < t≤15s (In≤32A) 1s < t≤30s (In>32A)	Non-trip	Turn on the aux. switch for making current
	AC:9.6In DC:13.2In	Cold state	t < 0.1s	Trip	
D type	AC:9.6In DC:13.6In	Cold state	t≤0.1s	Non-trip	Turn on the aux. switch for making current
	AC:14In DC:20.4In	Cold state	t < 0.1s	Trip	
Note: “Cold state” refers to no load before test under the reference temperature +30°C and below					

TGB3Z-63(H) Series, 6(10)KA AC/DC MCB

3.3 Protection characteristic curve of circuit breaker

Setting value of the AC trip characteristic

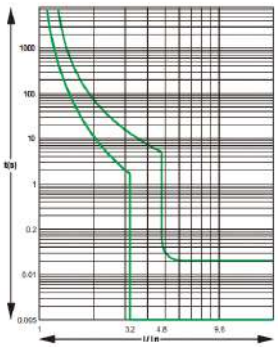

Protection Characteristic Curve for Type B

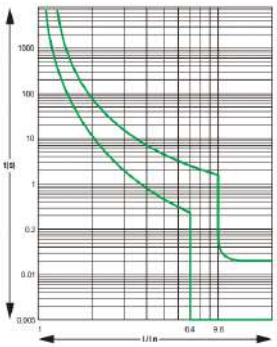

Protection Characteristic Curve for Type C

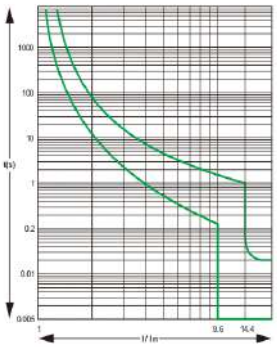

Protection Characteristic Curve for Type D

Setting value of the DC trip characteristic

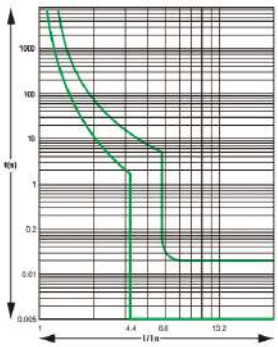

Protection Characteristic Curve for Type B

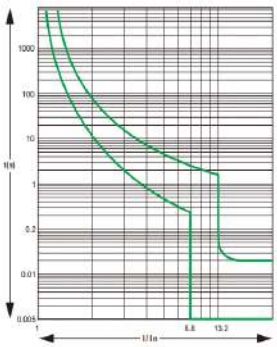

Protection Characteristic Curve for Type C

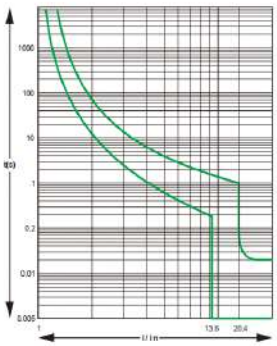

Protection Characteristic Curve for Type D

3.4 Wiring connection: It is suitable for connection of wire of 25mm^2 and below (see Table 3), the wiring method is that the wire is pressed firmly with screws, and the torque is 2.5N·m.

(Table 3)

Rated current (A)	Sectional area of wire (mm^2)
1 ～ 6	1
10	1.5
16 ～ 20	2.5
25	4
32	6
40 ～ 50	10
63	16

TGB3Z-63(H) Series, 6(10)KA AC/DC MCB

4 Outline and Installation Dimensions

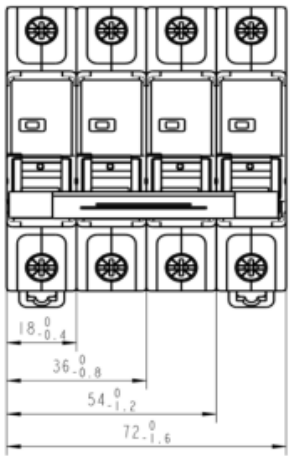

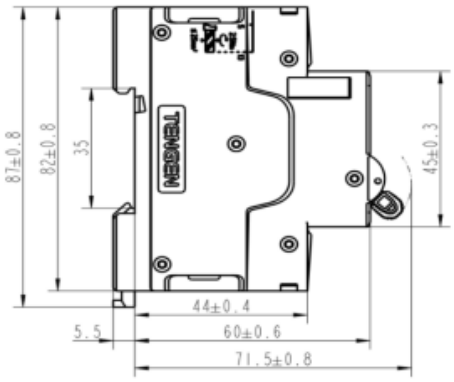

5 Ordering Notice

5.1 Model and name of product: such as: TGB3Z-63 miniature circuit breaker;

5.2 The number of poles of the product, such as 2P

5.3 Instantaneous trip type of product, such as Type C

5.4 The rated current of the product, such as 63A

5.5 Order quantity, such as 100 units

5.6 Order example: TGB3-63Z 2P C63, 100 units

TGB3(H)-125 Series, 6(10)KA MCB

1. Overview

TBG3H-125 miniature case circuit breaker (hereinafter referred to circuit breaker) is used in AC 50/60 line with rated voltage 230V (for 1P) or 400V (for 2P/3P/4P) and rated current up to 125A for overload and short-circuit protection. It can also be used for infrequent ON/OFF switching of the line under the normal operation. The circuit breaker is characterized by artistic shape, small size, light weight, excellent and reliable performance, high breaking capacity, quick tripping, and rail-mounted installation.

2 Type Designation

TG B 3 H - 125 C 1P 125 OF2

- OF2: Additional information: OF2: Aux. contact
- 125: Rated current (A)
- 1P: Number of poles: 1P, 2P, 3P, 4P
- C: Trip curve: B, C, D
- 125: Frame current (A)
- H: Breaking capacity: H: 10kA Non: 6kA
- 3: Design code
- B: Miniature Circuit Breaker
- TG: Enterprise code

3 Technical Parameters

3.1 Main technical parameters (see Table 1)

Table 1

Product name	TGB3-125	TGB3H-125
Standard	IEC60947-2	IEC60947-2
Certificate	CE	CE
Electrical specificaiton		
Number of poles	1P, 2P, 3P, 4P	1P, 2P, 3P, 4P
Rated frequency (Hz)	50/60	50/60
Frame current (A) Inm	125	125
Rated currnt (A) Ie	63, 80, 100, 125	63, 80, 100, 125
Rated voltage (V) Ue	AC230(1P), AC400(2P, 3P, 4P) DC80(1P), DC125(2P)	AC230(1P), AC400(2P, 3P, 4P) DC80(1P), DC125(2P)
Rated insulation voltage (V) Ui	1000	1000
Rated impulse withstand voltage (kV) Uimp	6	6
Rated run short circuit breaking capacity (kA) Ics	6	7.5
Rated limit short circuit breaking capacity (kA) Icu	6	10
Instantaneous trip characteristics	B:Ii=5In(AC), Ii=7In(DC) C:Ii=8In(AC), Ii=12In(DC) D:Ii=12In(AC), Ii=17In(DC)	B:Ii=5In(AC), Ii=7In(DC) C:Ii=8In(AC), Ii=12In(DC) D:Ii=12In(AC), Ii=17In(DC)
Trip form	Thermomagnetic trip	Thermomagnetic trip
Pollution degree	3	3
Electrical and mechanical accessories	OF2 (Auxiliary)	
Mechanical properties		
Electrical life (times)	1,500(In≤100A), 1,000(In>100A)	1,500(In≤100A), 1,000(In>100A)

TGB3(H)-125 Series, 6(10)KA MCB

Table 1, continued

Product name	TGB3-125	TGB3H-125
Mechanical life (times)	8,500(In≤100A), 7,000(In>100A)	8,500(In≤100A), 7,000(In>100A)
Protection grade	IP20	IP20
Indication window	Contact status indication	Contact status indication
Operating conditions		
Ambinet temperature	-35℃- +70℃	-35℃- +70℃
Installation site altitude	Not exceed 2,000 meters	Not exceed 2,000 meters
Wiring terminal	Wired with screws	Wired with screws
Maximum wiring capacity	50 mm^2	50 mm^2
Maximum ultimate torque Nm	6	6
Installation category	Class III	Class III
Insallation method	TH35-7.5 steel mounting rail	TH35-7.5 steel mounting rail
Incoming method	Top and bottom	Top and bottom

3.2 Operation properties of overcurrent release of circuit breaker (see Table 2)

Table 2

No.	Trip type	Test current		Characteristic requirement		Start state	Ambient temp.
		AC	DC	In ≤ 63A	In > 63A		
a	B, C, D types	1.05In		Non-trip when ≥1h	Non-trip when ≥2h	Cold state	+30±2℃
b		1.3In		Trip when <1h	Trip when <2h	a item test followed	
c	B type	4.0In	5.6In	≥0.2s Non trip		Cold state	Any appropriate temperature
		6.0In	8.4In	< 0.2s trip			
	C type	6.4In	9.6In	≥0.2s Non trip		Cold state	Any appropriate temperature
		9.6In	14.4In	< 0.2s trip			
	D type	9.6In	13.6In	≥0.2s Non trip		Cold state	Any appropriate temperature
		14.4In	20.4In	< 0.2s trip			

Note: Cold state refers to 30℃ temperature, and without load before test.

3.3 Circuit breaker protection characteristic curve

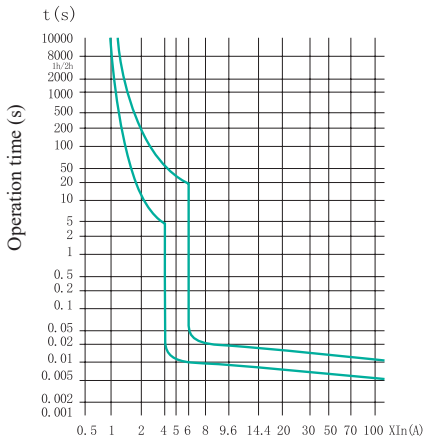

B(Ii=5In) type: Thermal / Electromagnetic characteristics protection curve

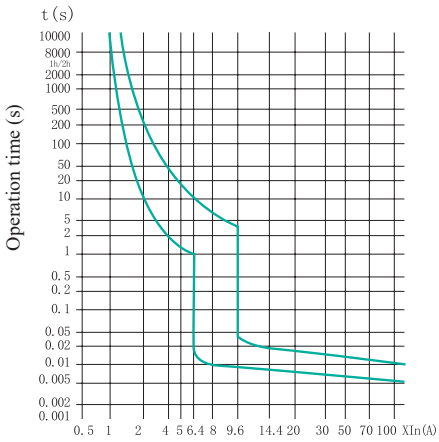

C(Ii=8In) type: Thermal / Electromagnetic characteristics protection curve

TGB3(H)-125 Series, 6(10)KA MCB

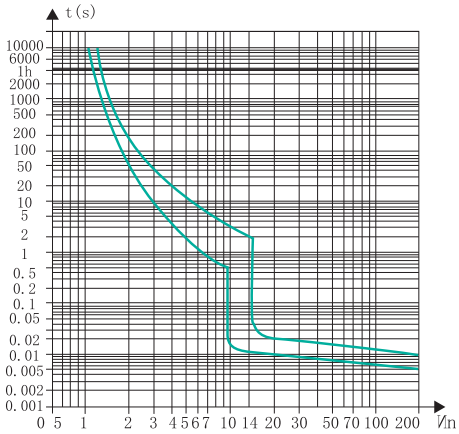

D(Ii=12In) type: Thermal / Electromagnetic characteristics protection curve

3.4 Wiring: Suitable for multistrand copper wire of 50 mm^2 and below (see Table 3), the wiring terminal tightening torque is 3.5 N.m.

Table 3

Rated current (A)	Nominal section area of copper wire (mm^2)
63	16
80	25
100	35
125	50

3.5 Wiring method: Wiring frame fixed with screws

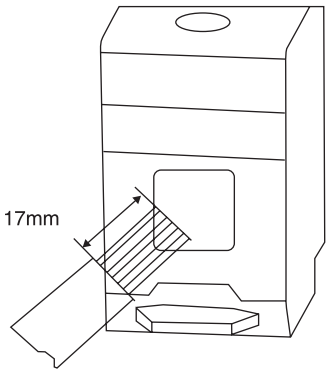

TGB3(H)-125 Series, 6(10)KA MCB

3.6 Corrected currents under the different ambient temperature (see Table 4)

Table 4

Rated current (A)	Corrected current value A											
	-35°C	-30°C	-20°C	-10°C	0°C	10°C	20°C	30°C	40°C	50°C	60°C	70°C
63	92	89	85	81	77	73	68	63	58	52	46	41
80	116	114	108	102	96	92	86.4	80	74	68	61	54
100	147	143	136	129	122	115	108	100	92.5	84.5	75.5	66
125	184	180	171	162	153	144	135	125	117	107	97	84

4 Outline and Installation Dimensions

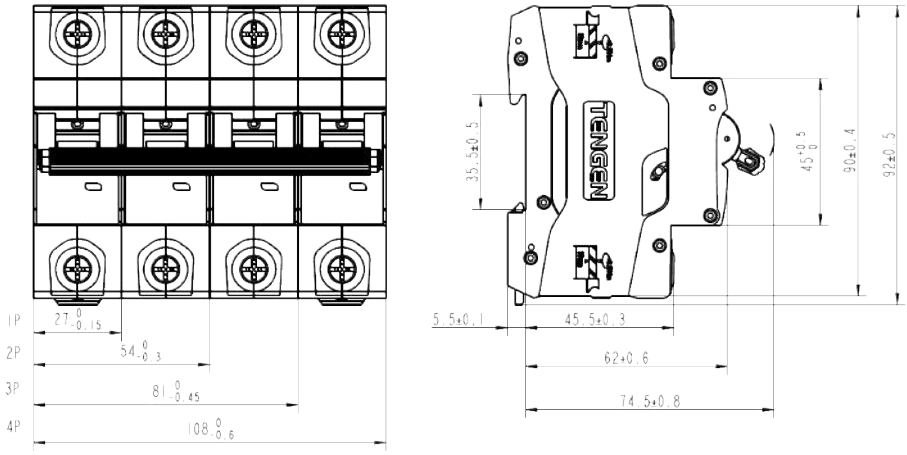

5 Ordering Notice

5.1 Product model and name: such as TGB3H-125 Moulded Case Circuit Breaker

5.2 Trip type: such as: C type

5.3 Number of poles: such as: 3P

5.4 Rated current, such as: 80A

5.6 Order quantity: such as: 60 pcs

5.7 Order example: TGB3H-125C 3P 80A, 60 pcs

TGBG-63DC Series, 6KA DC MCB

1 Overview

TGBG-63DC DC miniature circuit breaker (hereinafter referred to as circuit breaker) is used in the DC system with the rated voltage DC250V/DC300V (1P outline), DC500V/DC600V (2P outline), DC750V/DC900V (3P outline), DC1000V/DC1200V (4P outline), and with the rated current up to 63A for overload and short circuit protection, and it is also used for infrequent on-off operation. the products are suitable for DC system applications such as communication equipment and photovoltaic systems.

2 Type Designation

TG B G - 63 DC 2P C 63

- 63 — Rated current (A)
- C — Instantaneous trip type
- 2P — Number of poles: 1P, 2P, 3P, 4P
- DC — DC circuit breaker
- 63 — Frame current (A)
- G — Design code
- B — Miniature circuit breakers
- TG — Enterprise code

3 Technical Parameters

3.1 Main technical parameters (see Table 1)

Table 1

Product name	TGBG-63DC	
Standard	IEC/EN60947-2	
Product certification	CE	
Electrical characteristics		
Number of poles	1P, 2P, 3P, 4P	
Frame current (A) Inm	63	
Rated current (A) In	1,2,3,4,5,6,10,16, 20,25,32,40,50,63	
Rated voltage (V) Ue	DC250V(1P) DC500V(2P) DC750V(3P) DC1000V(4P)	DC300V(1P) DC600V(2P) DC900V(3P) DC1200V(4P)
Rated insulation voltage (V) Ui	1200	
Rated impulse withstand voltage (kV) Uimp	6	
Rated run short circuit breaking capacity (kA) Ics	6	4.5
Rated short circuit capability (kA) Icu	6	4.5
Instantaneous trip characteristics	Thermal magnetic trip	
Trip form	(B)Ii: 5.5In(1±20%) (C)Ii: 8.5In(1±20%)	
Pollution degree	2	
Electrical and mechanical auxiliaries	MX: Shunt release OF: Aux. contact SD: Alarm contact MX+OF: Shunt + aux. release MV: Overvoltage release MN: Undervoltage release MV+MN: Overvoltage and undervoltage release MNS:No-voltage release	
Mechanical characteristics		

TGBG-63DC Series, 6KA DC MCB

Table 1, Continued

Product name	TGBG-63DC
Electrical life (times)	1500
Mechanical life (times)	20000
Protection grade	IP20
Indicator window	Contact state indicaotr
Normal operating conditions and installation characteristics	
Ambient temperature	-35℃~+70℃
Installation altitude	Not exceed 2000m
Wiring terminal	Screw-pressed
Max. wiring capacity	25mm2
Max. ultimate torque N.m	2.5
Installation category	Class II, Class III
Installation method	TH35-7.5 standard rail
Inlet method	See 3.5 Wiring Diagram

3.2 Operating characteristics of the overcurrent release of the circuit breaker (see Table 2)

Table 2

No.	Instantaneous trip type	Test current	Start state	Trip or no trip limit time	Expected result	Remarks
a	Type B Type C	1.05In	Cold state	t≥1h	No trip	
b		1.3In	1.05In test followed	t < 1h	Trip	Current rises to the specified value stably within 5s
c	Type B	4.4In	Cold state	t≤0.2s	No trip	Turn on aux. switch to power on the current
d		6.6In	Cold state	t < 0.2s	Trip	
e	Type C	6.8In	Cold state	t≤0.2s	No trip	Turn on aux. switch to power on the current
f		10.2In	Cold state	t < 0.2s	Trip	
Note: "Cold state" means no load before test at a reference temperature of +30℃.						

3.3 Protection characteristic curve of circuit breaker

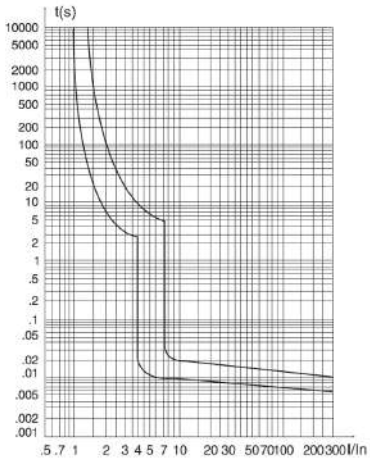

B type thermal / electromagnetic trip curve

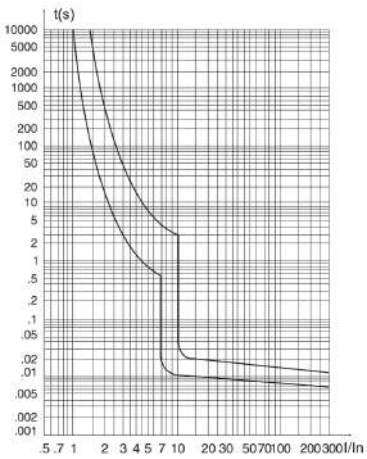

C type thermal / electromagnetic trip curve

TGBG-63DC Series, 6KA DC MCB

3.4 Wiring: 16mm^2 and below wire is used for connection (see Table 3), and screw pressing connection method is used with a torque of 2.5N•m.

Table 3

Rated current (A)	Nominal sectional area of copper wire (mm^2)
1~6	1
10	1.5
16~20	2.5
25	4
32	6
40~50	10
63	16

3.5 Wiring Diagram

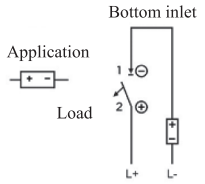

1P wiring diagram

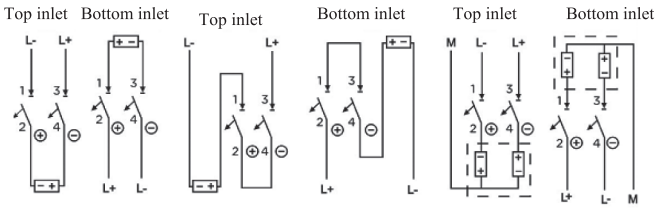

2P wiring diagram

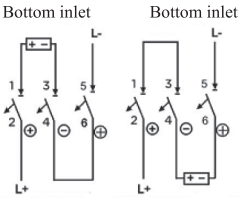

3P wiring diagram

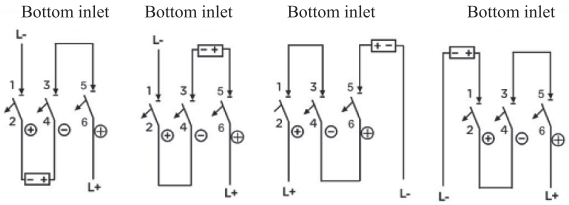

3P wiring diagram

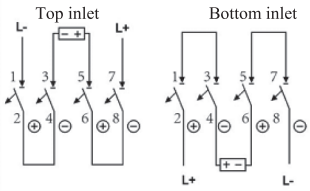

4P wiring diagram

Notes:

(1) L+ means positive pole of power supply, and L- means negative pole of power supply;

(2) + means positive pole of circuit breaker, and – means negative pole of circuit breaker;

(3) Generally, the "L-" of DC power supply is grounded, and the neutral pole "M" of the positive and negative power supply system is grounded.

TGBG-63DC Series, 6KA DC MCB

4 Outline and Installation Dimensions

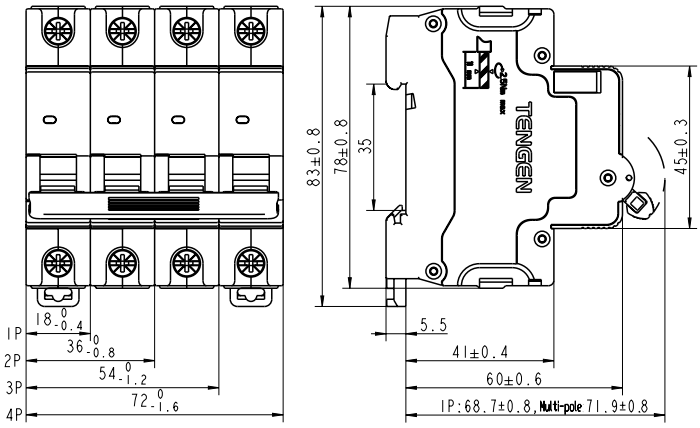

5 Ordering Notice

Please specify the following when ordering:

5.1 Product name, such as TGBG-63DC miniature circuit breaker;

5.2 Number of poles, such as 2P;

5.3 Product instantaneous trip type, such as C type;

5.4 Product rated current, such as 63A;

5.5 Qty., such as 100 units;

5.6 Order example: TGBG-63DC 2P C63 100 units.

THB1-63L Series, 15KA MCB

1 Overview

THB1-63L moulded case circuit breaker (hereinafter referred to as circuit breaker) is a new product developed by the company. The product features with reliable performance, accurate protection characteristics, small size, artistic appearance and novel design. The circuit breaker is used in the AC 50/60Hz power line facilities and electrical equipment with the rated voltage AC230V/400V and with the rated current up to 63A in buildings and similar places for overcurrent protection, it is also used for infrequent on-off operation. The product conforms to IEC60947-2 standard.

2 Product Features

2.1 Breaking capacity up to 15kA.
2.2 The product has exquisite and artistic appearance.
2.3 With accurate and table protection characteristics.
2.4 Dual terminals on both sides are suitable for busbar bar, single-core conductor and terminal clamp wiring.
2.5 The wiring screws, high torque and firm wiring of the composite groove can realize quick wiring.
2.6 Any power supply cord inlet direction.

3 Type Designation

TH B 1 – 63 L

- L: Derived code: L: 15kA
- 63: Frame rated current
- 1: Design code
- B: Circuit breaker
- TH: Enterprise code

4 Main Technical Parameters

Product name		THB1-63L
Electrical characteristics		
Number of poles		1P, 2P, 4P, 3P
Frame current (A)	Inm	63
Rated current (A)	In	6-63
Rated voltage (V)	Ue	230-400
Rated insulation voltage (V)	Ui	500
Rated impulse withstand voltage (kV)	Uimp	6
Rated operating short circuit breaking capacity (kA)	Ics	7.5
Rated ultimate short circuit breaking capacity (kA)	Icu	15
Pollution degree		2
Instantaneous trip characteristic		C/D
Electrical accessories and mechanical accessories		■
Mechanical characteristics		
Electrical life (times)		1000
Mechanical life (times)		2000
Proteciton grade		IP20
Reference setting temp.		30

THB1-63L Series, 15KA MCB

Other characteristics	
Max. wiring capacity	25
Terminal ultimate torque N.m	4
Indicator window	■
Inlet method	Top and bottom

5 Technical Parameters

THB1-63L Miniature Circuit Breaker has the following functions
♦ Short circuit protection
♦ Overload protection
♦ Isolation function
♦ With different types (aux., aux. alarm, overvoltage, and undervoltage) of accessories configured

Model

Type	1P		2P	
			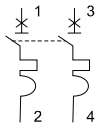	
Rated current (In)	Tripping Curve		Tripping Curve	
	C	D	C	D
6A	THB1-63L 1P C6	THB1-63L 1P D6	THB1-63L 2P C6	THB1-63L 2P D6
10A	THB1-63L 1P C10	THB1-63L 1P D10	THB1-63L 2P C10	THB1-63L 2P D10
16A	THB1-63L 1P C16	THB1-63L 1P D16	THB1-63L 2P C16	THB1-63L 2P D16
20A	THB1-63L 1P C20	THB1-63L 1P D20	THB1-63L 2P C20	THB1-63L 2P D20
25A	THB1-63L 1P C25	THB1-63L 1P D25	THB1-63L 2P C25	THB1-63L 2P D25
32A	THB1-63L 1P C32	THB1-63L 1P D32	THB1-63L 2P C32	THB1-63L 2P D32
40A	THB1-63L 1P C40	THB1-63L 1P D40	THB1-63L 2P C40	THB1-63L 2P D40
50A	THB1-63L 1P C50	THB1-63L 1P D50	THB1-63L 2P C50	THB1-63L 2P D50
63A	THB1-63L 1P C63	THB1-63L 1P D63	THB1-63L 2P C63	THB1-63L 2P D63
Width mm	17.8		35.6	

Note: If single magnetic type is required, please specify the “Single magnetic type” after the Model.

THB1-63L Series, 15KA MCB

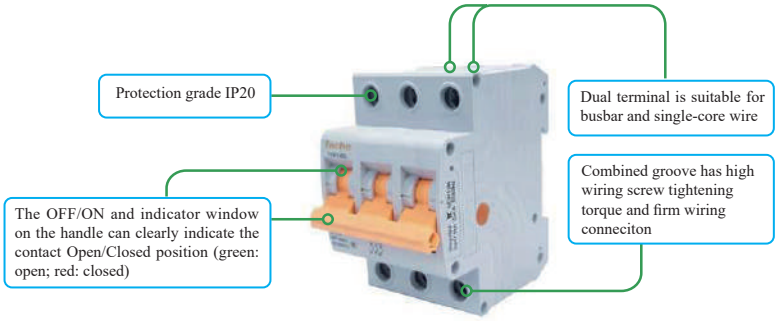

Type	3P		4P	
	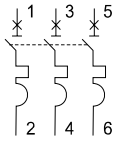		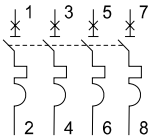	
Rated current (In)	Tripping Curve		Tripping Curve	
	C	D	C	D
6A	THB1-63L 3P C6	THB1-63L 3P D6	THB1-63L 4P C6	THB1-63L 4P D6
10A	THB1-63L 3P C10	THB1-63L 3P D10	THB1-63L 4P C10	THB1-63L 4P D10
16A	THB1-63L 3P C16	THB1-63L 3P D16	THB1-63L 4P C16	THB1-63L 4P D16
20A	THB1-63L 3P C20	THB1-63L 3P D20	THB1-63L 4P C20	THB1-63L 4P D20
25A	THB1-63L 3P C25	THB1-63L 3P D25	THB1-63L 4P C25	THB1-63L 4P D25
32A	THB1-63L 3P C32	THB1-63L 3P D32	THB1-63L 4P C32	THB1-63L 4P D32
40A	THB1-63L 3P C40	THB1-63L 3P D40	THB1-63L 4P C40	THB1-63L 4P D40
50A	THB1-63L 3P C50	THB1-63L 3P D50	THB1-63L 4P C50	THB1-63L 4P D50
63A	THB1-63L 3P C63	THB1-63L 3P D63	THB1-63L 4P C63	THB1-63L 4P D63
Width mm	53.4		71.2	

Note: If single magnetic type is required, please specify the “Single magnetic type” after the Model.

THB1-63L Series, 15KA MCB

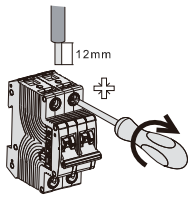

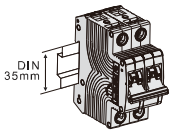

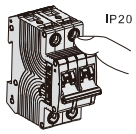

Main Features

AC working frequency (Hz)		AC50/60
Breaking capacity Ics (kA)		7.5
Ultimate breaking capacity Icn (kA)		15
Operating voltage Ue (V)	1P	230
	2P	400
	3P, 4P	400
Insulation voltage Ui(V)	AC	500
Pollution degree		2
Impulse voltage Uimp(kV)		6
Thermal trip	Reference setting temp.	30°C
Magnetic trip	C curve	8In±20% (C type release)
	D curve	12In±20% (D type release)
Current limit grade		3

Other parameters

Protection grade		IP20
Life (O-C)	Electrical life	10000 times
	Mechanical life	20000 times
Ambinet temp.		-5°C~+40°C
Installaiton altitude		Not exceed 2000m
Installation category		Class II, III
Installation method		Standard rail TH35-7.5(GB/T 19334)

Weight (g)

Circuit breaker	THB1-63L
1P	121
2P	245
3P	366
4P	488

Wiring connection

Screw size	Rated torque	Ultimate torque	National standard rated torque	Wiring capacity
M5	2.5N·m	4N·m·	2N·m	25mm^2 and below

THB1-63L Series, 15KA MCB

6 Characteristic Curve

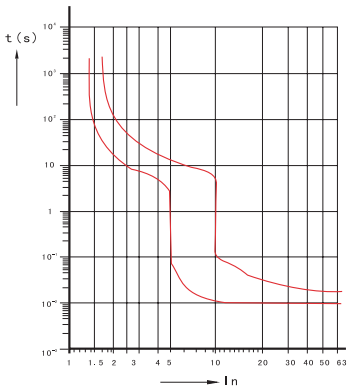

C characteristic curve

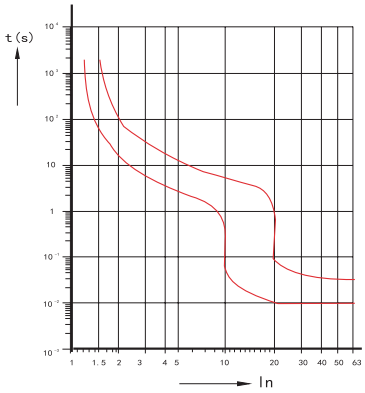

D characteristic curve

7 Outline and Installation Dimensions

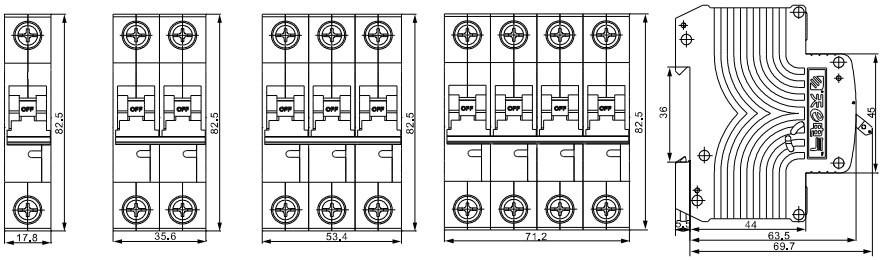

1P 2P 3P 4P

8 Order Specification

Please specify the following when ordering circuit breaker:

- ♦ Product model and name, such as THB1-63L Miniature Circuit Breaker
- ♦ Type and rated current of instantaneous release, such as C32 (rated current is 32A for the lighting protection type)
- ♦ Number of poles of circuit breaker, such as 3 poles
- ♦ Order qty.

Order example: THB1-63L 3P C32 100 unit (THB1-63L Miniature Circuit Breaker, 3 poles, C type, rated current 32A, 100 units)

TGB2D-80R Series, 6KA Photovoltaic & Building Dedicated MCB

1 Overview

TGB2D-80R photovoltaic grid-connected special circuit breaker is suitable for distributed photovoltaic grid-connected station to defect and judge the voltage on the photovoltaic distribution line. It will delay open automatically in the event of overvoltage, undervoltage or voltage loss on the photovoltaic distribution line, and will be closed automatically when the voltage restores to the normal state.
TGB2D-80R self-resetting overvoltage and undervoltage protector (referred to as building special circuit breaker) is suitable for low-voltage distribution system in household and similar applications. It can open automatically in the event of the overvoltage or undervoltage caused by the line failure, and can detect the line voltage automatically; it can be closed automatically when the line voltage restores to the normal state.
Photovoltaic special circuit breaker meets the standards: IEC60898-1
Building special circuit breaker meets the standards: IEC60898-1

2 Type Designation

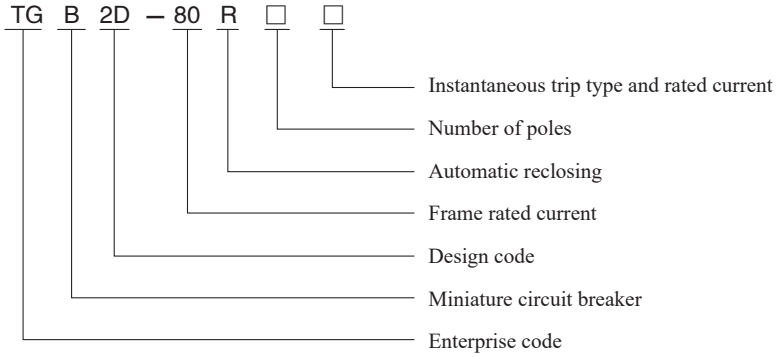

3 Technical Parameters

3.1 Main Technical Parameters

Model	TGB2D-80R
Rated current	10, 16, 20, 25, 32, 40, 50, 63, 80A
Number of poles	2P/4P
Rated operating voltage	AC230V/2P AC400V/4P
Rated insulation voltage	500V
Rated impulse withstand voltage	6kV
Rated short circuit breaking capacity	6kA
Rated run breaking capacity	6kA
Trip type	C
Mechanical life	10000 times
Electrical life	6000 times
Ambient temperature	-25℃ ～ +65℃
Altitude	Not exceed 2000m
Installation category	Class II and Class III
Pollution degree	2
Protection grade	IP20

TGB2D-80R Series, 6KA Photovoltaic & Building Dedicated MCB

3.2 Recommended Nominal Sectional Area of Copper Wire

Rated current (A)	10 ～ 20	25	32	40 ～ 50	63	80
Sectional area of wire（mm^2）	2.5	4	6	10	16	25

3.3 Circuit Breaker Judges Power Voltage and Controls the Operation State

No.	Power voltage		Initial state	State after operation		Power voltage state continuous holding time
	Circuit breaker for photovoltaic	Circuit breaker for buildings		Auto mode	Manual mode	
1	180V≤U≤270V	185V≤U≤255V	OFF	ON	OFF	0-10s
2	160V≤U≤290V	165V≤U≤275V	ON	ON	ON	Keep the initial state
3	U ＜ 160V	U ＜ 165V	ON	OFF	OFF	0-10s
4	U ＜ 180V	U ＜ 185V	OFF	OFF	OFF	Keep the initial state
5	U ＞ 290V	U ＞ 275V	ON	OFF	OFF	0-10s
6	U ＞ 270V	U ＞ 255V	OFF	OFF	OFF	Keep the initial state
7	U<45V (Power outage and voltage loss)	U<45V (Power outage and voltage loss)	ON	OFF	ON	0-10s
8	Phase loss (only for three phases and four wires)	Phase loss (only for three phases and four wires)	ON	OFF	OFF	Keep the initial state
9	Phase loss (only for three phases and four wires)	Phase loss (only for three phases and four wires)	ON	OFF	OFF	0-10s

4 Outline and Installation Dimensions

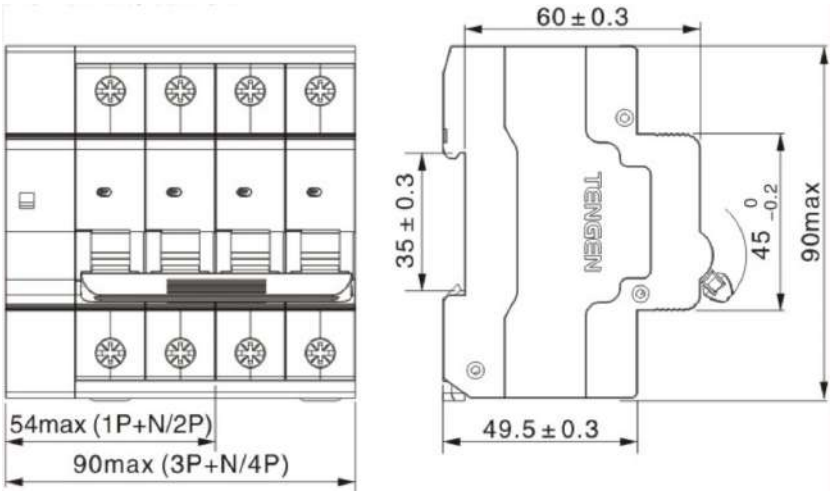

TGB2D-80R Series, 6KA Photovoltaic & Building Dedicated MCB

5 Ordering Notice

Please specify the following items when ordering:

5.1 Product name, such as TGB2D-80R photovoltaic special circuit breaker;

5.2 Number of poles, such as 4P;

5.3 Product instantaneous trip type, such as Type C;

5.4 Product rated current, such as 80A;

5.5 Product Qty., such as 100 units;

5.6 Order example: TGB2D-80R photovoltaic special 4P C80 100 units.

TGB2D-125RW Series, 6KA Photovoltaic & Building Dedicated MCB

1 Overview

TGB2D-125RW photovoltaic grid-connected system dedicated circuit breaker is suitable for distributed photovoltaic grid-connected system for detection and determination of voltage on the photovoltaic power distribution line. The circuit breaker will open in delay automatically in case of overvoltage, undervoltage or voltage loss on the photovoltaic power distribution line, and will be closed when the voltage recovers to the normal value.

TGB2D-125RW self-recovery overvoltage & undervoltage protector (hereinafter referred to as building dedicated circuit breaker) is suitable for household low-voltage power distribution system or for similar application. It will open automatically in case of overvoltage or undervoltage caused by line failure, and can detect the line voltage automatically, and will be closed when the line voltage recovers to the normal value.

The photovoltaic dedicated circuit breaker complies with the following Standard: IEC60898-1

The building dedicated circuit breaker complies with the following Standard: IEC60898-1

2 Type Designation

TG B 2D - 125 R W

- W — Modules 27mm
- R — Auto reclosure
- 125 — Frame current
- 2D — Design code
- B — Miniature circuit breaker
- TG — Enterprise code

3 Technical Parameters

3.1 Main technical parameters

Product Model	TGB2D-125RW
Rated current(A) In	63, 80, 100, 125
Number of poles	2P/4P
Rated voltage(V) Ue	AC230V/2P
	AC400V/4P
Rated insulation voltage(V) Ui	690
Rated impulse withstand voltage(kV) Uimp	6
Rated short-circuit breaking capacity(kA) Ics	6
Rated short-circuit breaking capacity(kA) Icn	6
Instantaneous trip characteristics	C
Mechanical life	10,000 times
Electrical life	6,000 times
temperaure	-25℃ ~ +65℃
Altitude	Not exceed 2,000 meters
Installation category	Class II and Class III
Pollution degree	2
Protection grade	IP20

TGB2D-125RW Series, 6KA Photovoltaic & Building Dedicated MCB

3.2 Recommended nominal sectional area of connecting copper wire

Rated current (A)	63	80	100	125
Sectional area of wire (mm^2)	16	25	35	50

3.3 Judgement of power voltage and control of action state of circuit breaker

No.	Power voltage		Starting state	State after action		Continuous power voltage state holding time
	Circuit breaker for photovoltaic	Circuit breaker for building		Auto mode	Manual mode	
1	180V≤U≤270V	185V≤U≤255V	Open	Closed	Open	0-10s
2	160V≤U≤290V	165V≤U≤275V	Closed	Closed	Closed	Stay initial state
3	U<160V	U<165V	Closed	Open	Open	0-10s
4	U<180V	U<185V	Open	Open	Open	Stay initial state
5	U>290V	U>275V	Closed	Open	Open	0-10s
6	U>270V	U>255V	Open	Open	Open	Stay initial state
7	U<45V (power outage and voltage loss)	U<45V (power outage and voltage loss)	Closed	Open	Closed	0-10s
8	Phase loss (only for three-phase four-wire)	Phase loss (only for three-phase four-wire)	Open	Open	Open	Stay initial state
9	Phase loss (only for three-phase four-wire)	Phase loss (only for three-phase four-wire)	Closed	Open	Open	0-10s

4 Outline and Installation Dimensions

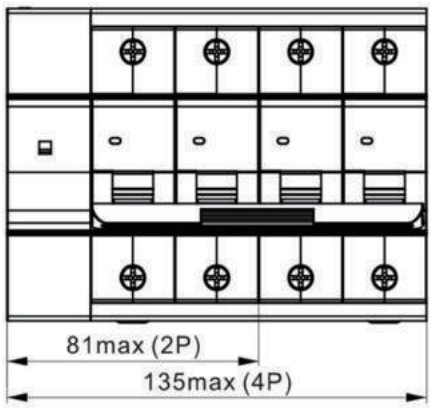

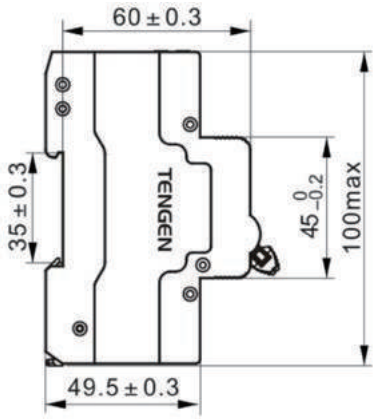

TGB2D-125RW Series, 6KA Photovoltaic & Building Dedicated MCB

5 Ordering Notice

Please specify the following items when ordering:

5.1 Product name, such as TGB2D-125RW photovoltaic dedicated circuit breaker;

5.2 Number of poles: such as 4P;

5.3 Instantaneous trip type: such as C type;

5.4 Rated current, such as 80A;

5.5 Qty.: such as 100 pcs

5.6 Order example: TGB2D-125RW photovoltaic dedicated 4P C80 100 pcs.

TGBMA Series, 6kA Single Magnetic MCB

1 Overview

TGBMA Series, 6kA Single Magnetic MCB (hereinafter referred to as circuit breaker) is primarily used in the AC 50Hz/60Hz power distribution network with rated current 1A to 63A and with rated voltage 230V or 400V, suitable for some areas such as medical IT power distribution system, motor protection and building fire protection system for power distribution at the low voltage terminal; as a short circuit protection switch, it can work together with the thermal relay or motor starter to realize overload protection.

2 Type Designation

TG B MA – 63 C 1P 16 MX

- MX: Additional information
- 16: Rated current (A)
- 1P: Number of poles (1P/2P/3P/4P)
- C: Instantaneous trip type (C/D)
- 63: Frame rated current (A)
- MA: Single magnetic type
- B: Miniature circuit breakers
- TG: Enterprise code

3 Technical Parameters

3.1 Main Technical Parameters (See Table 1)

Table 1

Product model	TGBMA-63
Standard	IEC60947-2
Electrical characteristics	
Number of poles	1P, 2P, 3P, 4P
Rated frequency (Hz)	50/60
Frame rated current (A) Inm	63
Rated current (A) In	1, 2, 3, 4, 5, 6, 10, 16, 20, 25, 32, 40, 50, 63
Rated voltage (V) Ue	AC230/400（1P）, AC230（2P） AC400（2P, 3P, 4P）
Rated insulation voltage (V) Ui	690
Rated impulse withstand voltage (kV) Uimp	6
Rated operating short-circuit breaking capacity (kA) Ics	6
Rated limit short-circuit breaking capacity (kA) Icu	6
Instantaneous trip characteristic	C(8In±20%) D(12In±20%)
Trip form	Magnetic trip
Pollution degree	Level 3
Electrical and mechanical accessories	MX: Shunt release 0F: Aux. contact SD: Alarm contact MX+OP: Shunt + Aux. release MV: Overvoltage release MN: Undervoltage release MV+MN: Over/undervoltage release MNS: Voltage loss release
Mechanical properties	
Electrical life	10000
Mechanical life	20000

TGBMA Series, 6kA Single Magnetic MCB

续表 1

Product model	TGBMA-63
Protection grade	IP20
Normal working conditions and installation characteristics	
Ambient temperature	-35℃ ～ +70℃
Installation altitude	Not exceed 2000m
Terminal block	Screw-pressed
Max. wiring capacity	16mm²
Max. limit torque	2.5N·m
Installation category	Class II, Class III
Installation method	TH35-7.5 (1.0) Standard rail
Inlet method	Top and bottom

3.2 Operation performance of the circuit breaker overcurrent release

Table 2

Instantaneous trip type	Test current	Starting state	Trip or no-trip limit time	Expected results	Remarks
Type C	6.4In	Cold state	t≥0.2s	No trip	Turn on the aux. switch to power on the current
	9.6In	Cold state	t<0.2s	Trip	
Type D	9.6In	Cold state	t≥0.2s	No trip	Turn on the aux. switch to power on the current
	14.4In	Cold state	t<0.2s	Trip	

Note: "Cold state" means no load before the test at a reference temperature of +30°C.

3.3 Protection characteristic curve of circuit breaker

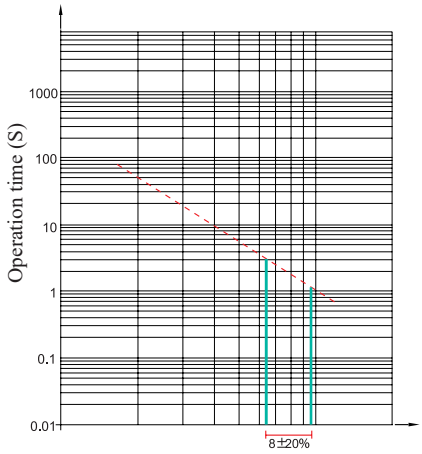

Fig. 1. C type protection characteristic curve

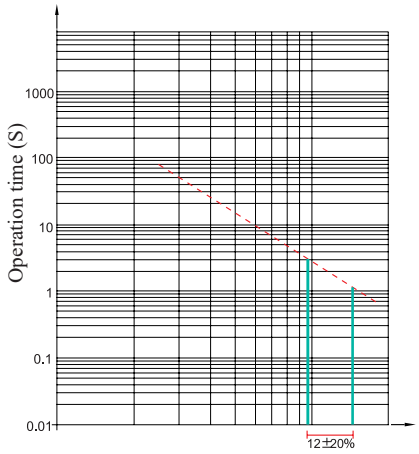

Fig. 2 D type protection characteristic curve

3.4 Wiring: Suitable for the connection of 16mm^2 and below wire (see Table 3), the wire is tightened with screw according to the tightening torque of 2.5 N.m.

Table 3

Rated current (A)	Nominal sectional area of copper wire (mm^2)
1 ～ 6	1
10	1.5
16 ～ 20	2.5
25	4
32	6
40 ～ 50	10
63	16

TGBMA Series, 6kA Single Magnetic MCB

4 Outline and Installation Dimensions

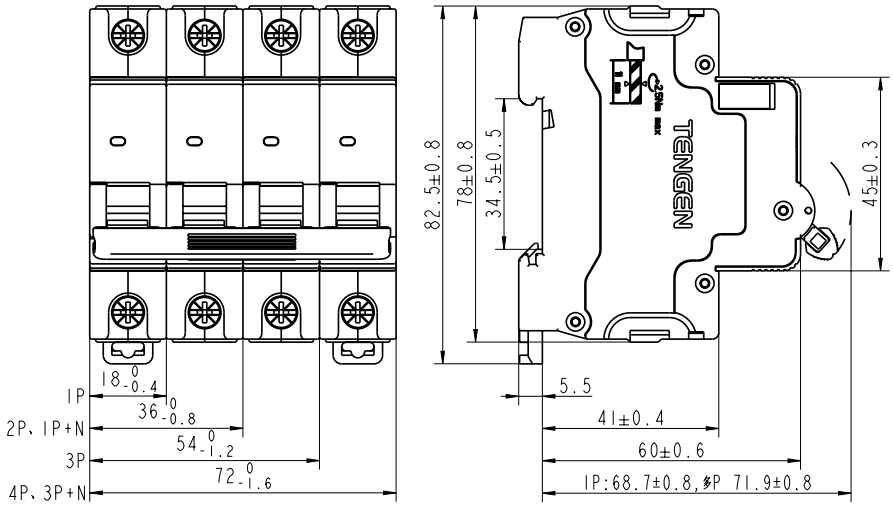

5 Ordering Notice

5.1 Product model and name, such as TGBMA-63D single magnetic circuit breaker;
5.2 Number of poles, such as: 3P;
5.3 Instantaneously trip type, such as: D type;
5.4 Rated current of the product, such as: 40A;
5.5 Qty., such as 1000 units;
5.6 Ordering example: TGBMA-63D 3P 40A, 1000 units.

THB1D2-63H Series, 6KA DC MCB

1 Overview

CE CB

RoHS

TÜV

Certfication

THB1D2-63H Series, 6KA DC MCB has the following functions

- ♦ Short circuit protection
- ♦ Overload protection
- ♦ Isolation function
- ♦ With different types (aux., aux. alarm) of accessories configured

Model

Type	1P		2P	
			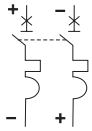	
Rated current (In)	Trip type		Trip type	
	B	C	B	C
1A	THB1D2-63H 1P 1A type B DC125/220/250V	THB1D2-63H 1P 1A type C DC125/220/250V	THB1D2-63H 2P 1A type B DC250/440/500V	THB1D2-63H 2P 1A type C DC250/440/500V
2A	THB1D2-63H 1P 2A type B DC125/220/250V	THB1D2-63H 1P 2A type C DC125/220/250V	THB1D2-63H 2P 2A type B DC250/440/500V	THB1D2-63H 2P 2A type C DC250/440/500V
3A	THB1D2-63H 1P 3A type B DC125/220/250V	THB1D2-63H 1P 3A type C DC125/220/250V	THB1D2-63H 2P 3A type B DC250/440/500V	THB1D2-63H 2P 3A type C DC250/440/500V
4A	THB1D2-63H 1P 4A type B DC125/220/250V	THB1D2-63H 1P 4A type C DC125/220/250V	THB1D2-63H 2P 4A type B DC250/440/500V	THB1D2-63H 2P 4A type C DC250/440/500V
6A	THB1D2-63H 1P 6A type B DC125/220/250V	THB1D2-63H 1P 6A type C DC125/220/250V	THB1D2-63H 2P 6A type B DC250/440/500V	THB1D2-63H 2P 6A type C DC250/440/500V
10A	THB1D2-63H 1P 10A type B DC125/220/250V	THB1D2-63H 1P 10A type C DC125/220/250V	THB1D2-63H 2P 10A type B DC250/440/500V	THB1D2-63H 2P 10A type C DC250/440/500V
16A	THB1D2-63H 1P 16A type B DC125/220/250V	THB1D2-63H 1P 16A type C DC125/220/250V	THB1D2-63H 2P 16A type B DC250/440/500V	THB1D2-63H 2P 16A type C DC250/440/500V
20A	THB1D2-63H 1P 20A type B DC125/220/250V	THB1D2-63H 1P 20A type C DC125/220/250V	THB1D2-63H 2P 20A type B DC250/440/500V	THB1D2-63H 2P 20A type C DC250/440/500V
25A	THB1D2-63H 1P 25A type B DC125/220/250V	THB1D2-63H 1P 25A type C DC125/220/250V	THB1D2-63H 2P 25A type B DC250/440/500V	THB1D2-63H 2P 25A type C DC250/440/500V
32A	THB1D2-63H 1P 32A type B DC125/220/250V	THB1D2-63H 1P 32A type C DC125/220/250V	THB1D2-63H 2P 32A type B DC250/440/500V	THB1D2-63H 2P 32A type C DC250/440/500V
40A	THB1D2-63H 1P 40A type B DC125/220/250V	THB1D2-63H 1P 40A type C DC125/220/250V	THB1D2-63H 2P 40A type B DC250/440/500V	THB1D2-63H 2P 40A type C DC250/440/500V
50A	THB1D2-63H 1P 50A type B DC125/220/250V	THB1D2-63H 1P 50A type C DC125/220/250V	THB1D2-63H 2P 50A type B DC250/440/500V	THB1D2-63H 2P 50A type C DC250/440/500V
63A	THB1D2-63H 1P 63A type B DC125/220/250V	THB1D2-63H 1P 63A type C DC125/220/250V	THB1D2-63H 2P 63A type B DC250/440/500V	THB1D2-63H 2P 63A type C DC250/440/500V
Width mm	17.8		35.6	

Type	3P		4P	
	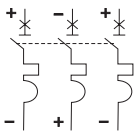		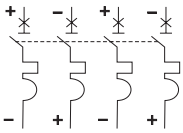	
Rated current (In)	Trip type		Trip type	
	B	C	B	C
1A	THB1D2-63H 3P 1A type B DC750V	THB1D2-63H 3P 1A type C DC750V	THB1D2-63H 4P 1A type B DC1000V	THB1D2-63H 4P 1A type C DC1000V
2A	THB1D2-63H 3P 2A type B DC750V	THB1D2-63H 3P 2A type C DC750V	THB1D2-63H 4P 2A type B DC1000V	THB1D2-63H 4P 2A type C DC1000V
3A	THB1D2-63H 3P 3A type B DC750V	THB1D2-63H 3P 3A type C DC750V	THB1D2-63H 4P 3A type B DC1000V	THB1D2-63H 4P 3A type C DC1000V
4A	THB1D2-63H 3P 4A type B DC750V	THB1D2-63H 3P 4A type C DC750V	THB1D2-63H 4P 4A type B DC1000V	THB1D2-63H 4P 4A type C DC1000V
6A	THB1D2-63H 3P 6A type B DC750V	THB1D2-63H 3P 6A type C DC750V	THB1D2-63H 4P 6A type B DC1000V	THB1D2-63H 4P 6A type C DC1000V
10A	THB1D2-63H 3P 10A type B DC750V	THB1D2-63H 3P 10A type C DC750V	THB1D2-63H 4P 10A type B DC1000V	THB1D2-63H 4P 10A type C DC1000V
16A	THB1D2-63H 3P 16A type B DC750V	THB1D2-63H 3P 16A type C DC750V	THB1D2-63H 4P 16A type B DC1000V	THB1D2-63H 4P 16A type C DC1000V
20A	THB1D2-63H 3P 20A type B DC750V	THB1D2-63H 3P 20A type C DC750V	THB1D2-63H 4P 20A type B DC1000V	THB1D2-63H 4P 20A type C DC1000V
25A	THB1D2-63H 3P 25A type B DC750V	THB1D2-63H 3P 25A type C DC750V	THB1D2-63H 4P 25A type B DC1000V	THB1D2-63H 4P 25A type C DC1000V
32A	THB1D2-63H 3P 32A type B DC750V	THB1D2-63H 3P 32A type C DC750V	THB1D2-63H 4P 32A type B DC1000V	THB1D2-63H 4P 32A type C DC1000V
40A	THB1D2-63H 3P 40A type B DC750V	THB1D2-63H 3P 40A type C DC750V	THB1D2-63H 4P 40A type B DC1000V	THB1D2-63H 4P 40A type C DC1000V
50A	THB1D2-63H 3P 50A type B DC750V	THB1D2-63H 3P 50A type C DC750V	THB1D2-63H 4P 50A type B DC1000V	THB1D2-63H 4P 50A type C DC1000V
63A	THB1D2-63H 3P 63A type B DC750V	THB1D2-63H 3P 63A type C DC750V	THB1D2-63H 4P 63A type B DC1000V	THB1D2-63H 4P 63A type C DC1000V
Width mm	53.4		71.2	

THB1D2-63H Series, 6KA DC MCB

Main Features

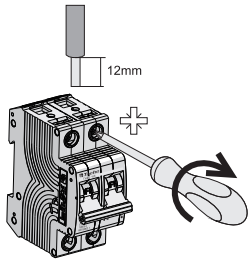

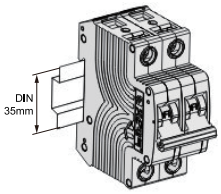

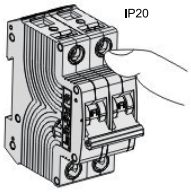

Standard: IEC60947-2 and GB/T 14048.2		
Run breaking capacity Ics (kA)		7.5
Ultimate breaking capacity Icn (kA)		10
Operating voltage Ue (V)	1P	125/220/250
	2P	250/440/500
	3P	750
	4P	1000
Pollution degree		3
Impulse voltage Uimp(kV)		6
Thermal trip	Reference setting temp.	30°C
Magnetic trip	B curve	(4~7) In
	C curve	(7~14) In
Current limit grade		3

Other parameters

Protection grade		IP20
Life (O-C)	Electrical life (times)	1500
	Mechanical life (times)	20000
Ambinet temp.		-35°C~+70°C
Installaiton altitude		Not exceed 2000m
Installation category		Class II, III
Installation method		DIN35 Standard rail

Weight (g)

Circuit breaker	THB1D2-63H
1P	120
2P	240
3P	360
4P	480

Wiring connection

Screw size	Rated torque	Ultimate torque	National standard rated torque	Wiring capacity
M5	2.5N·m	4N·m·	2N·m	25mm^2 and below

THB1D2-63H Series, 6KA DC MCB

Wiring diagram

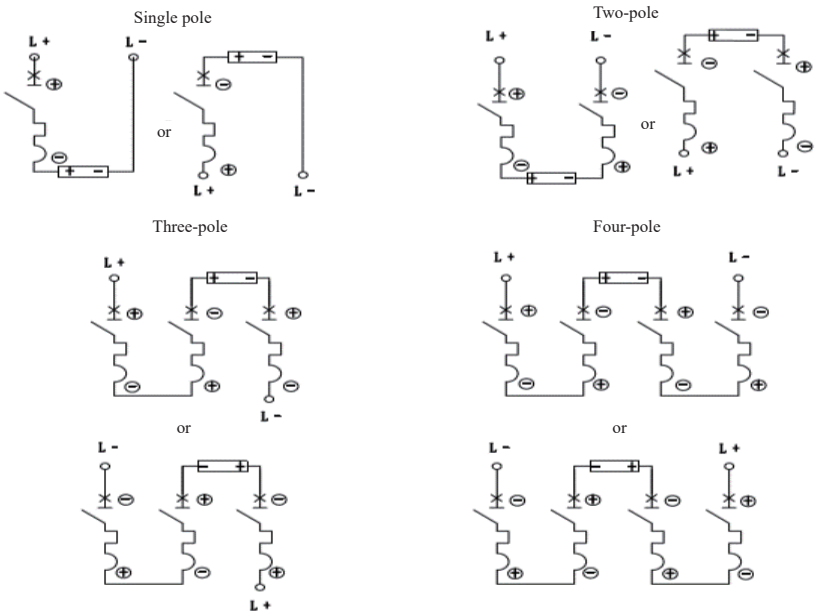

Note:
1 L+ positive pole of power supply, L- negative pole of power supply
2 ⊕ Positive pole of circuit breaker, ⊖ Negative pole of circuit breaker
3 Load
4 The positive and negative poles of the power supply cannot be connected incorrectly, otherwise the fault current cannot be effectively analyzed.

2 Outline and Installation Dimensions

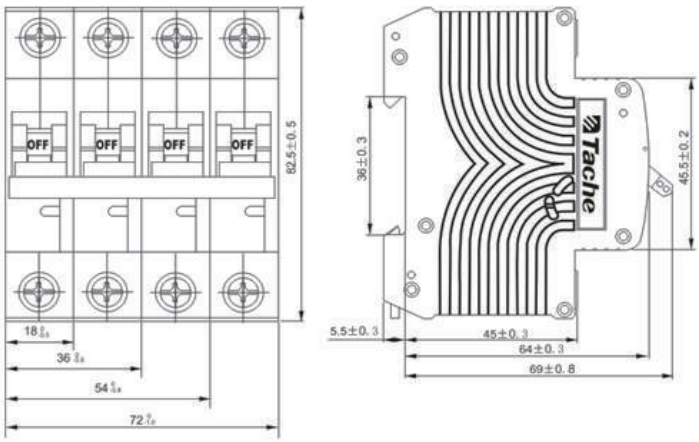

3 Order Specification

Please specify the following when ordering circuit breaker:
♦ Product model and name, such as THB1D2-63H Series, 6KA DC MCB
♦ Type and rated current of instantaneous release, such as C32 (the rated current of conventional load type is 32A)
♦ Number of poles of circuit breaker, such as 2 poles
♦ Order qty.
Order example: THB1D2-63H 2P C32 100 unit (THB1D2-63H Series, 6KA DC MCB, 2 poles, C type, rated current 32A, 100 units)

TGL1N-80(H) Series RCCB, Electromagnetic A-S/AC-S Type

1 Overview

TGL1N-80(H) series electromagnetic type residual current operated circuit breaker is used in the AC 50/60Hz circuit with the rated voltage AC230V/240V (2P) and AC400V/415V(4P) and with the rated current up to 80A. In the event of personal electric shock or the grid leakage current exceeding the specified value, the electromagnetic type residual current operated circuit breaker can quickly cut off the power supply in a very short time when there is no power voltage to ensure the safety of personnel and power equipment, and it is also used for infrequent conversion of the line. The product is especially suitable for building, industrial and commercial lighting distribution system.

The product complies with IEC/EN 61008-1 ROHS2.0 standards, and passes the TUV, CE, and CB certification and obtains relevant certificates.

2 Type Designation

TG L 1N - 80 H / 2P AC 80 30mA

- 30mA — Rated residual action current: 10mA (AC type In≤32A) 30mA 100mA 300mA
- 80 — Rated current (A)
- AC — Rated residual operating current working type: AC type A type S Type
- 2P — Number of poles (2P, 4P)
- H — Rated limited short-circuit current capacity: None: standard type; H: high breaking capacity
- 80 — Frame rated current (A)
- 1N — Design code.
- L — Residual current circuit breaker
- TG — Enterprise code

3 Technical Parameters

3.1 Basic parameters

Table 1

Product name	TGL1N-80	TGL1N-80H
Standard	IEC/EN 61008-1 ROHS2.0	
Product certificate	TUV, CE, CB	
Electrical characteristics		
Rated voltage (Ue)	AC230V/240V(2P), AC400V/415V(4P)	
Rated frequency (Hz)	50/60Hz	
Rated current (Ie)	16A, 20A, 25A, 32A, 40A, 50A, 63A, 80A	
Rated residual operating current IΔn)	10mA (AC type In≤32A), 30mA, 100mA, 300mA (A, AC type)	
Rated operating current type	AC type, A type, S type	
Rated operating current time (t)	Common type t≤0.1S, S type0.1S<t≤0.5S;	
Rated residual making and breaking capacity (IΔm)	IΔm=Im=1000A	
Rated limit short circuit current (Inc)	Inc=IΔc=6000A	Inc=IΔc=10000A
Number of poles	2P, 4P	
Rated insulation voltage (Ui)	690V	
Rated impulse withstand voltage (Uimp)	4kV	
Leakage release type	Electromagnetic type	
Pollution degree	2	

TGL1N-80(H) Series RCCB, Electromagnetic A-S/AC-S Type

Table 1, continued

Product name	TGL1N-80	TGL1N-80H
Mechanical properties		
Electrical life	2000 times	
Mechanical life	4000 times	
Protection grade	IP20	
Normal working conditions and installation characteristics		
Ambient temperature	-25℃~ +70℃	
Installation altitude	Not exceed 2000m	
Wiring terminal	Pressed via screw	
Max. wiring capacity (mm^2)	35	
Max. ultimate torque (N.m)	3.0	
Installation category	Class II, Class III	
Installation method	TH35-7.5 standard rail	
Inlet method	Top and bottom	

3.2 Rated residual current action breaking time

3.2.1 The breaking time of A and AC type AC residual current (effective value) is shown in Table 2

Table 2

Model	IΔn	Max. breaking time of RCCB at the residual current (s)					
		IΔn	2IΔn	5IΔn	0.25A	5A, 200A, 500A	
General type	<30mA	0.1	0.08	/	0.04	0.04	Max. breaking time
	30mA	0.1	0.08	/	0.04	0.04	
	>30mA	0.1	0.08	0.04	/	0.04	
S type	>30mA	0.5	0.2	0.15	/	0.15	Max. breaking time
		0.13	0.06	0.05	/	0.04	Min. non-drive time

3.3 Wiring: Suitable for wire connection of 35mm^2 and below (see Table 3). The wiring method is that the wire is fixed with screws according to the tightening torque 3N•m.

Table 3

Rated current (A)	Sectional area of wire (mm^2)
16~20	2.5
25	4
32	6
40	10
50~63	16
80	25

TGL1N-80(H) Series RCCB, Electromagnetic A-S/AC-S Type

4 Outline and Installation Dimensions

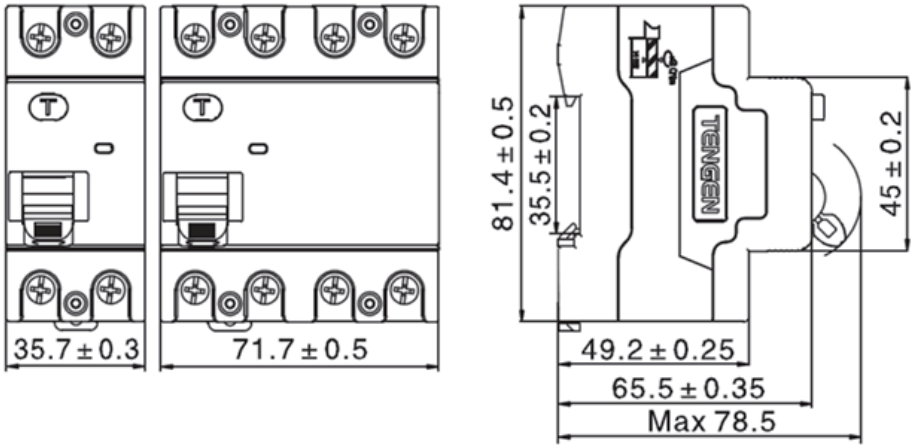

5 Ordering Notice

Please specify the following items when ordering:

5.1 Product name, such as TGL1N-80 series residual current operated circuit breaker

5.2 The number of poles of the product, such as 2P;

5.3 The rated current of the product, such as 32A;

5.4 The rated residual operating current of the product, such as 30mA;

5.5 Working status of DC component, AC type;

5.6 The number of products, such as 100 pcs;

5.7 Order example: TGL1N-80 2P 32A 30mA AC, 100 pcs.

TGL1N-80H Series RCCB, Electromagnetic B Type

1 Overview

TGL1N-80H series residual current circuit breaker is suitable for AC 50/60Hz Hz type B residual current protection circuit with rated voltage AC230V/240V (1P+N), AC400V/415V (3P+N), and with rated current up to 80A. It can quickly cut off the power supply in a short time in case of personal electric shock or when the leakage current from the power grid exceeds the specified value for safety protection of people and electrical equipment and is used for infrequent conversion of the line and the infrequent start of the motor. this product is suitable for various places such as industries, commercial purposes and charging pile fields, and high-rise residential buildings.

The product complies with IEC/EN 61008-1, IEC/EN 62423 ROHS2.0 standards, and passes the TUV, CE, and CB certification and obtains relevant certificates.

2 Type Designation

TG L 1N - 80 H / 1P+N B 80 30mA

- 30mA — Rated residual action current: 30mA 100mA 300mA
- 80 — Rated current (A)
- B — Rated residual operating current working type: B Type
- 1P+N — Number of poles (1P+N,3P+N)
- H — High breaking capacity
- 80 — Frame rated current (A)
- 1N — Design code.
- L — Residual current circuit breaker
- TG — Enterprise code

3 Technical Parameters

3.1 Basic parameters

Table 1

Product name	TGL1N-80H
Standard	IEC/EN 61008-1, IEC/EN 62423 ROHS2.0
Certificate	TUV, CE, CB
Electrical characteristics	
Rated voltage (Ue)	AC230V/240V (1P+N), AC400V/415V (3P+N), N pole can be open and closed
Rated frequency (Hz)	50/60Hz
Rated current (Ie)	16, 20, 25, 32, 40, 50, 63, 80A
Rated residual operating current IΔn	30mA, 100mA, 300mA
Rated operating current type	B type
Rated operating current time (t)	t ≤0.1S
Rated residual making and breaking capacity (IΔm)	IΔm=Im=1000A
Rated limit short circuit current (Inc)	Inc=IΔc=10000A
Number of poles	1P+N, 3P+N
Rated insulation voltage (Ui)	690V
Rated impulse withstand voltage (Uimp)	4KV
Leakage release type	Electromagnetic type
Pollution degree	2

TGL1N-80H Series RCCB, Electromagnetic B Type

Table 1, continued

Product name	TGL1N-80H
Mechanical properties	
Electrical life	2,000 times
Mechanical life	4,000 times
Protection grade	IP20
Normal operation conditions and installation characteristics	
Ambient temperature	-25℃~ +70℃
Installation site altitude	≤ 2,000 meters
Terminals	Fixed with screws
Maximum wiring capacity	35mm²
Maximum limit torque	3N•m
Installation category	III
Installation method	TH35-7.5 standard rail
Incoming method	Top inlet and bottom inlet

3.2 Wiring: Suitable for wire connection of 35mm^2 and below (see Table 3). The wiring method is that the wire is fixed with screws according to the tightening torque 3N•m.

Table 2

Rated current (A)	Sectional area of wire (mm^2)
16~20	2.5
25	4
32	6
40	10
50~63	16
80	25

TGL1N-80H Series RCCB, Electromagnetic B Type

4 Outline and Installation Dimensions

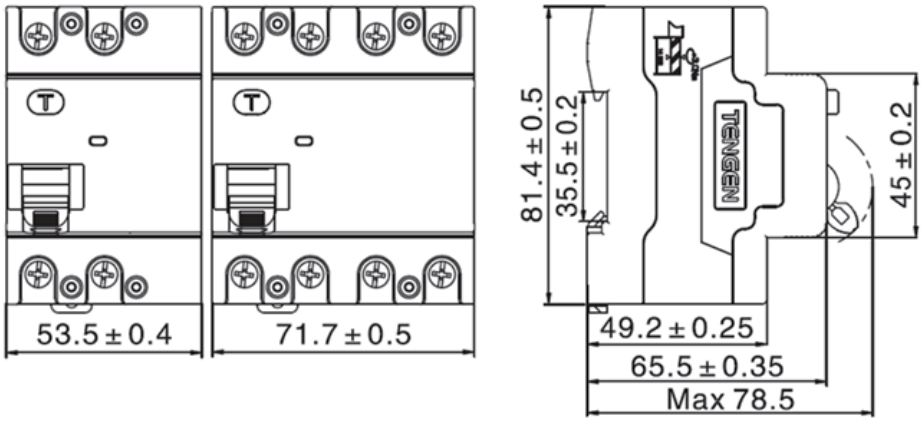

5 Ordering Notice

Please specify the following items when ordering:

5.1 Product name, such as TGL1N-80 series residual current operated circuit breakers

5.2 The number of poles of the product, such as 1P+N;

5.3 The rated current of the product, such as 32A;

5.4 The rated residual operating current of the product, such as 30mA;

5.5 Working status of DC component, B type;

5.6 The number of products, such as 100 pcs;

5.7 Order example: TGL1N-80 1P+N 32A 30mA B, 100 pcs.

TGB1NLE-32(63) Series RCBO, Electronic AC Type

1 Overview

TGB1NLE-32(63) series residual current circuit breaker with overcurrent protection (hereinafter referred to as leakage circuit breaker) is mainly used in AC 50Hz line with rated working voltage 230V/400V and rated current up to 63A. In case of personal electric shock or when the grid leakage exceeds the specified value, the residual current circuit breaker can quickly cut off the power supply in a very short time for protection of the safety of people and electrical equipment, for overload, short circuit, and overvoltage protection and infrequent conversion of the line under normal conditions, especially suitable for industrial and commercial lighting distribution systems.

2 Type Designation

TG B 1N LE - 63 1P+N C 16 30mA

- 30mA — Rated current (mA)
- 16 — Rated current (A)
- C — Instantaneous trip characteristic type (C/D)
- 1P+N — Number of poles (1P+N/2P/3P/3P+N/4P)
- 63 — Frame current (A): 32, 63
- LE — Derivative function:
  LE: Electronic residual current circuit breaker with overcurrent protection
  LG: Electronic residual current circuit breaker with overvoltage protection
- 1N — Design code.
- B — Miniature Circuit Breaker
- TG — Enterprise code

3 Technical Parameters

3.1 The main technical parameters of the product (see Table 1)

Table

Product name		TGB1NLE-32	TGB1NLE-63
Standard		IEC61009-1	
Electrical characteristics			
Number of poles		1P+N, 2P, 3P, 3P+N, 4P (N pole normally open)	1P+N, 2P, 3P, 3P+N, 4P (N pole normally open)
Rated frequency (Hz)		50	50
Frame current (A)	Inm	32	63
Rated current (A)	Ie	6, 10, 16, 20, 25, 32	40, 50, 63
Rated voltage (V)	Ue	AC230(1P+N, 2P) AC400(3P, 3P+N, 4P)	AC230(1P+N, 2P) AC400(3P, 3P+N, 4P)
Rated insulation voltage (V)	Ui	690	690
Rated impulse withstand voltage (kV)	Uimp	4	4
Rated short-circuit breaking capacity (kA)	Ics	6	6
Rated short-circuit breaking capacity (kA)	Icn	6	6
Instantaneous trip characteristics		C(5In ～ 10In) D(10In ～ 14In)	C(5In ～ 10In) D(10In ～ 14In)
Trip form		Thermal magnetic trip	Thermal magnetic trip
Pollution degree		2	2
Electrical and mechanical accessories		MX: Shunt release OF: Auxiliary contact SD: Alarm contact MX+OF: Shunt release + auxiliary contact MV: Overvoltage release MN: Undervoltage release MV+MN: Overvoltage and undervoltage release MNS: No-voltage release	MX: Shunt release OF: Auxiliary contact SD: Alarm contact MX+OF: Shunt release+ auxiliary contact MV: Overvoltage release MN: Undervoltage release MV+MN: Overvoltage and undervoltage release MNS: No-voltage release
Rated residual current (mA) I △ n		15, 30, 50, 75, 100, 300	30, 50, 75, 100, 300
Maximum breaking time at rated residual current		0.1s	0.1s
Overvoltage protection: Uvo=280V±5%		√	√

TGB1NLE-32(63) Series RCBO, Electronic AC Type

Table 1, Continued

Product name	TGB1NLE-32	TGB1NLE-63
Mechanical properties		
Electrical life	10,000 times	10,000 times
Mechanical life	20,000 times	20,000 times
Protection grade	IP20	IP20
Normal operation conditions and installation characteristics		
Ambient temperature	-35℃ ～ +70℃	-35℃ ～ +70℃
Installation site altitude	≤2,000 meters	≤2,000 meters
Terminals	Fixed with screw	Fixed with screw
Maximum wiring capacity (mm²)	16	25
Maximum limit torque (Nm)	2	2.5
Installation category	Class II, III	Class II, III
Installation method	TH35-7.5 standard rail	TH35-7.5 standard rail
Incoming method	Top inlet and bottom inlet	Top inlet and bottom inlet

3.2 Action characteristics of circuit breaker overcurrent release (see Table 2)

Table 2

No.	Test current (A)	Start state	Set time	Expected outcome	Remarks
a	1.13In	Cold state	t≤1h	No trip	
	1.45In	Followed by 1.1.3In test	t ＜ 1h	trip	The current rises to the specified value within 5s
	2.55In	Cold state	1s ＜ t ＜ 60s (For In ≤ 32A)	trip	
			1s ＜ t ＜ 120s (For In ≤ 32A)		
c	5In	Cold state	t≤0.1s	No trip	Turn on the auxiliary switch for making current
	10In	Cold state	t ＜ 0.1s	trip	
d	10In	Cold state	t≤0.1s	No trip	Turn on the auxiliary switch for making current
	14In	Cold state	t ＜ 0.1s	trip	

Note: The cold state refers to the temperature 30℃ without load before the test.

3.3 Protection characteristic curve of circuit breaker

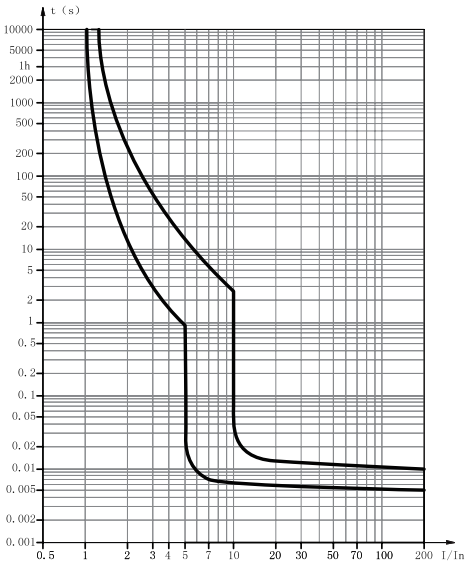

C Type protection characteristic curve

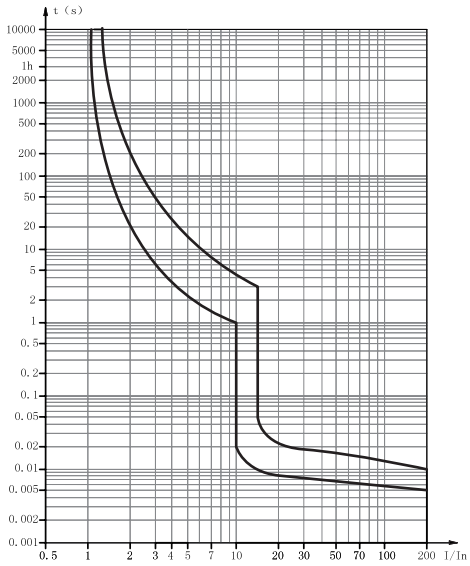

D Type protection characteristic curve

TGB1NLE-32(63) Series RCBO, Electronic AC Type

3.4 Wiring: Suitable for wire connection of 25mm^2 and below (see Table 3). The wiring method is that the wire is fixed with screws according to the tightening torque 2.5N·m.

Table 3

Rated current (A)	Cross area of wire (mm^2)
6	1
10	1.5
16 ～ 20	2.5
25	4
32	6
40 ～ 50	10
63	16

4 Outline and Installation Dimensions

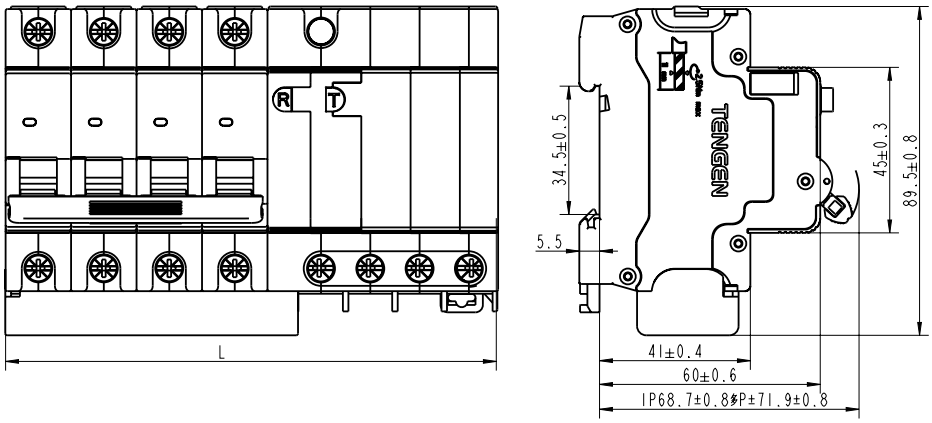

TGB1NLE-32(63) Series RCBO, Electronic AC Type

Table 4

Model	Number of poles	L(mm)
TGB1NLE(LG)-32	1P+N	45
TGB1NLE(LG)-63	1P+N	54
TGB1NLE(LG)-32	2P	63
TGB1NLE(LG)-63	2P	72
TGB1NLE(LG)-32	3P	90
TGB1NLE(LG)-63	3P	103.5
TGB1NLE(LG)-32	3P+N	99
TGB1NLE(LG)-63	3P+N	117
TGB1NLE(LG)-32	4P	117
TGB1NLE(LG)-63	4P	135

5 Ordering Notice

5.1 Product model and name, such as: TGB1NLE-32 residual current operated circuit breaker
5.2 Trip type, such as: C type
5.3 Number of poles of product, such as 2P
5.4 Rated current, such as 10A
5.5 Rated residual operating current, such as: 30mA
5.6 Order quantity, such as: 50 units
5.7 Order example: TGB1NLE-32 2P C10 30mA, 50 units

TGB1NL-40 Series RCBO, Electromagnetic A/AC Type

1 Overview

TGB1NL-40 Series RCBO, Electromagnetic A/AC Type with overcurrent protection is used in AC 50/60Hz circuit with rated voltage 230V/240V and with rated current up to 40A. It can quickly cut off the power supply in a short time in case of personal electric shock or when the leakage current of the power grid exceeds the specified value for safety protection of people and electrical equipment and is used for infrequent conversion of the line under the overload, short-circuit, and normal operating conditions. It is especially suitable for lighting distribution systems used in buildings, industries, and commercial purposes.
The product complies with IEC/EN 61008-1, IEC/EN 62423 ROHS2.0 standards, and passes the TUV, CE, and CB certification and obtains relevant certificates.

2 Type Designation

TG B 1N L - 40 / 1P+N C 40 30mA

- 30mA: Rated residual action current: 30mA 100mA 300mA
- 40: Rated current (A)
- C: Instantaneous trip type (B/C)
- 1P+N: Number of poles:1P+N
- 40: Frame current (A): 40
- L: Derivative function: Electromagnetic type residual current circuit breaker
- 1N: Design code.
- B: Residual current circuit breaker
- TG: Enterprise code

3 Technical Parameters

3.1 Basic parameters

Table 1

Product name	TGB1NL-40
Standard	IEC/EN 61009-1 ROHS2..0
Certificate	TUV, CB, CE
Electrical characteristics	
Rated voltage (Ue)	AC230V/240V
Rated frequency (Hz)	50/60Hz
Rated current (Ie)	6, 10, 16, 20, 25, 32, 40A
Rated residual operating current IΔn	30mA, 100mA, 300mA
Rated operating current type	Type AC, Type A
Residual operating current time (t)	≤0.1S;
Rated residual making and breaking capacity IΔm	500/2000A
Number of poles	1P+N
Rated insulation voltage (Ui)	500V
Rated impulse withstand voltage (Uimp)	4KV
Rated ultimate short circuit breaking capacity (Icn)	6KV
Rated run short circuit breaking capacity (Ics)	6KV
Instantaneous release type	Type B/C
Leakage release type	Electromagnetic type
Pollution degree	2

TGB1NL-40 Series RCBO, Electromagnetic A/AC Type

Table 1, continued

Product name	TGB1NL-40
Mechanical properties	
Electrical life	2,000 times
Mechanical life	4,000 times
Protection grade	IP20
Normal operation conditions and installation characteristics	
Ambient temperature	-25°C ～ +70°C
Installation site altitude	≤ 2,000 meters
Terminals	Fixed with screws
Maximum wiring capacity	16mm²
Maximum limit torque	2.5N•m
Installation category	Class II, Class III
Installation method	TH35-7.5 standard rail
Incoming method	top inlet and bottom inlet

3.2 Action characteristics of circuit breaker overcurrent release (see Table 2)

Table 2

Instantaneous trip type	Test current	Start state	Tripping or non-tripping limit time	Expected results	Remarks
B, C	1.13In	Cold state	t≤1h	Non-tripping	
	1.45In	Followed by 1.13In test	t<1h	Tripping	The current steadily rises to the specified value
	2.55In	Cold state	1s<t<60s (for In≤32A)	Tripping	
			1s<t<120s (for In>32A)		
B	3In	Cold state	t≤0.1s	Non-tripping	Turn on the current by closing the auxiliary switch
	5In		t<0.1s	Tripping	
C	5In	Cold state	t≤0.1s	Non-tripping	
	10In		t<0.1s	Tripping	
Note: "cold state" refers to no load before the test at the reference temperature +30°C					

TGB1NL-40 Series RCBO, Electromagnetic A/AC Type

3.3 Protection characteristic curve of circuit breaker

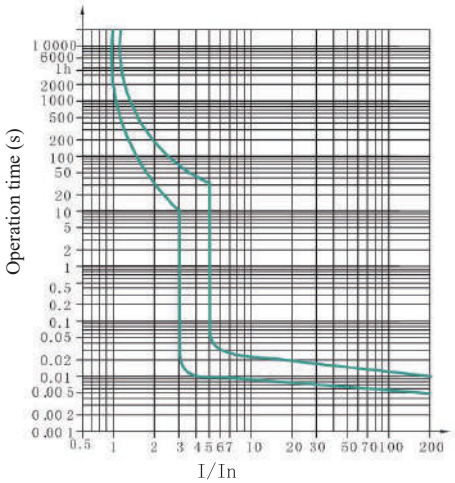

B type protection characteristic curve

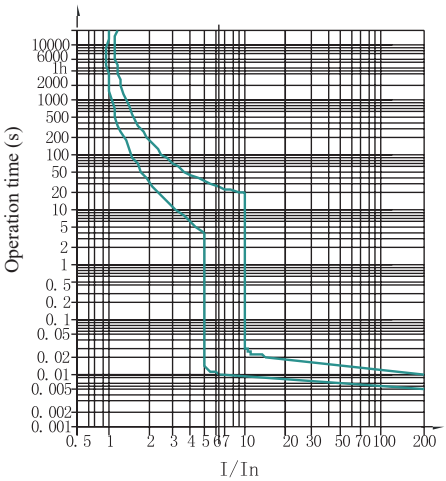

C type protection characteristic curve

3.4 Wiring: Suitable for wire connection of 16mm^2 and below (see Table 3). The wiring method is that the wire is fixed with screws according to the tightening torque 2.5N·m.

Table 3

Rated current (A)	Wire cross area (mm²)
6	1
10	1.5
16 ~ 20	2.5
25	4
32	6
40	10

TGB1NL-40 Series RCBO, Electromagnetic A/AC Type

4 Outline and Installation Dimensions

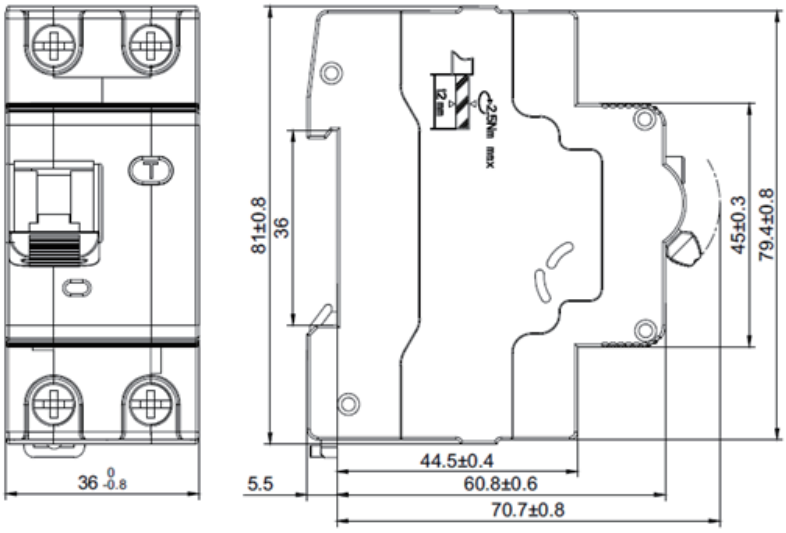

5 Ordering Notice

5.1 Product name, such as TGB1NL-40 residual current operated circuit breaker;

5.2 Number of product poles, such as 1P+N;

5.3 Instantaneous trip type of product, such as Type C;

5.4 Rated current of product, such as 40A;

5.5 Rated residual operating current of product, such as 30mA;

5.6 Product breaking capacity, such as 6kA;

5.7 Working type of residual operating current of product, such as AC type;

5.8 Qty., such as 100 units;

5.9 Order example: TGB1NL-40 1P+N C40 6kA 30mA AC type, 100 pcs.

TGB1NLE-63Y Series RCBO, Electronic A/AC Type

1 Overview

TGB1NLE-63Y Series RCBO, Electronic A/AC Type with overcurrent protection (hereinafter referred to residual current circuit breaker) is primarily used in AC 50Hz line with rated operating voltage 230V/400V and with rated current up to 63A. In the event of electric shock or when the leakage current from the power grid exceeds the specified value, the residual current circuit breaker can cut off the power quickly in a very short time for safety protection of people and electrical equipment. It can also be used for infrequent conversion of line in case of overload, short circuit, overload, and during operation, especially for lighting distribution system in industries and commerce.

2 Type Designation

TG B 1N LE - 63 Y 1P+N C 16 30mA

- 30mA — Rated residual current (mA)
- 16 — Rated current (A)
- C — Instantaneous trip type (B/C/D)
- 1P+N — Number of poles (1P+N/2P/3P/3P+N/4P)
- Y — Integrated type & small size
- 63 — Frame current (A): 63
- LE — Derivative function: LE: Electronic residual current circuit breaker
  LG: Electronic residual current circuit breaker with overvoltage protection
  LA: A type electronic residual current circuit breaker
- 1N — Design code
- B — Miniature circuit breaker
- TG — Enterprise code

3 Technical Parameters

3.1 Main technical parameters (see Table 1)

Table 1

Product name	TGB1NLE-63Y
Standard	IEC61009-1
Certificate	TUV, CE
Electrical characterustics	
Number of poles	1P+N, 2P (one protective pole, N pole can be closed) 2P, 3P, 3P+N, 4P (three protective poles, N pole can be closed) 4P (N pole is always on)
Rated frequency (Hz)	50
Frame current (A) Inm	63
Rated currnt (A) Ie	6, 10, 16, 20, 25, 32, 40, 50, 63
Rated voltage (V) Ue	AC230 (1P+N, 2P)
	AC400 (3P, 3P+N, 4P)
Rated insulation voltage (V) Ui	690
Rated impulse withstand voltage (kV) Uimp	4

TGB1NLE-63Y Series RCBO, Electronic A/AC Type

Table 1, continued

Product name	TGB1NLE-63Y
Rated operating short-circuit breaking capacity (kA) Ics	6
Rated ultimate short-circuit breaking capacity (kA) Icn	6
Instantaneous trip characteristics	B (3In-5In) C (5In-10In) D (10In-14In)
Trip form	Thermomagnetic trip
Pollution degree	2
Electrical and mechanical accessories	MX: Shunt release OF: Aux. contact SD: Alarm contact MX + OF: Shunt + Aux. release MV: Overvoltage release MN: Undervoltage release MV+MN: Overvoltage and undervoltage release
Residual current operation type	Type AC, type A
Rated residual current (mA) IΔn	15, 30, 50, 75, 100, 300
Overvoltage protection U_{VO} = 280V±5%	√
Mechanical properties	
Electrical life	10,000 times
Mechanical life	20,000 times
Protection grade	IP20
Normal working conditions and installation conditions	
Ambinet temperature	-35℃~+70℃
Installation site altitude	Not exceed 2,000 meters
Wiring terminal	Wired with screw
Maximum wiring capacity (mm^2)	25
Maximum ultimate torque (N.m)	2.5
Installation category	Class II, III
Installation method	TH35-7.5 standard rail
Incoming method	Top inlet

3.2 Operation characteristics of overcurrent release of circuit breaker (see Table 2)

Table 2

No.	Test current (A)	Starting state	Specified time	Expected results	Remarks
a	1.3In	Cold state	t≤1h	Non trip	
	1.45In	Followed by 1.3In	t<1h	Trip	Current rises to the specified value smoothly within 5s
	2.55In	Cold state	1s<t<60s (for In≤32A) 1s<t<120s (for In≤32A)	Trip	
b	5In	Cold state	t≤0.1s	Non trip	Turn on the auxiliary switch for making current
	10In	Cold state	t<0.1s	Trip	
c	10In	Cold state	t≤0.1s	Non trip	Turn on the auxiliary switch for making current
	14In	Cold state	t<0.1s	Trip	

Note: the cold state refers to temperature 30℃ without load before test.

TGB1NLE-63Y Series RCBO, Electronic A/AC Type

3.3 Circuit breaker protection characteristic curve

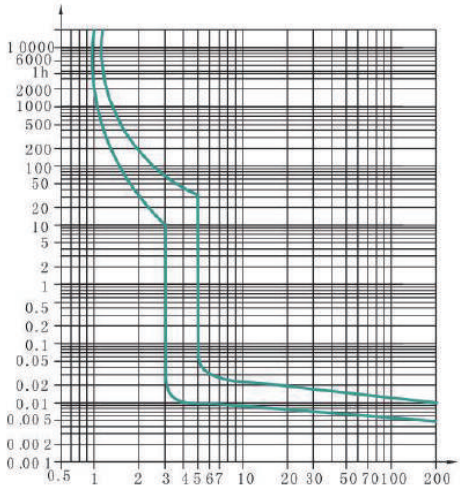

B type protection characteristic curve

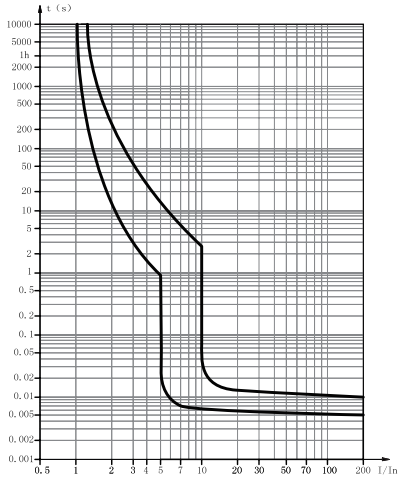

C type protection characteristic curve

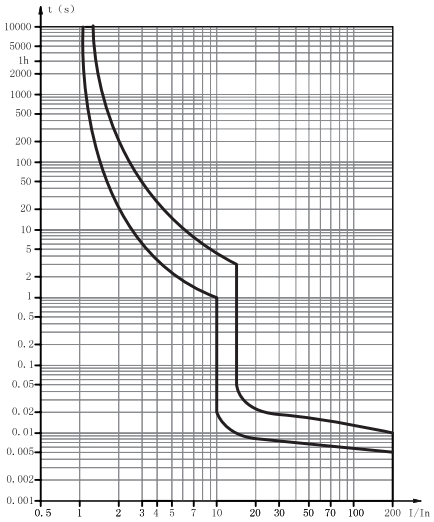

D type protection characteristic curve

3.4 Wiring: Suitable for wire connection of 25mm^2 and below (see Table 3)

The wiring method is that the wire is fixed with screws according to the torque 2.5N.m.

Table 3

Rated current (A)	Wire cross area (mm^2)
6	1
10	1.5
16-20	2.5
25	4
32	6
40-50	10
63	16

TGB1NLE-63Y Series RCBO, Electronic A/AC Type

4 Outline and Installation Dimensions

4.1 Dimensional drawing of TGB1NLE-63Y 1P+N, 2P (1 protective pole)

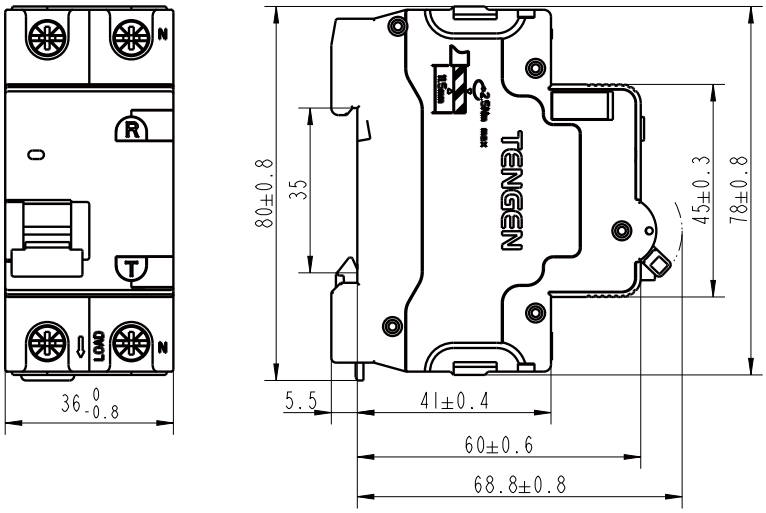

4.2 Dimensional drawing of TGB1NLE-63Y multi-pole model

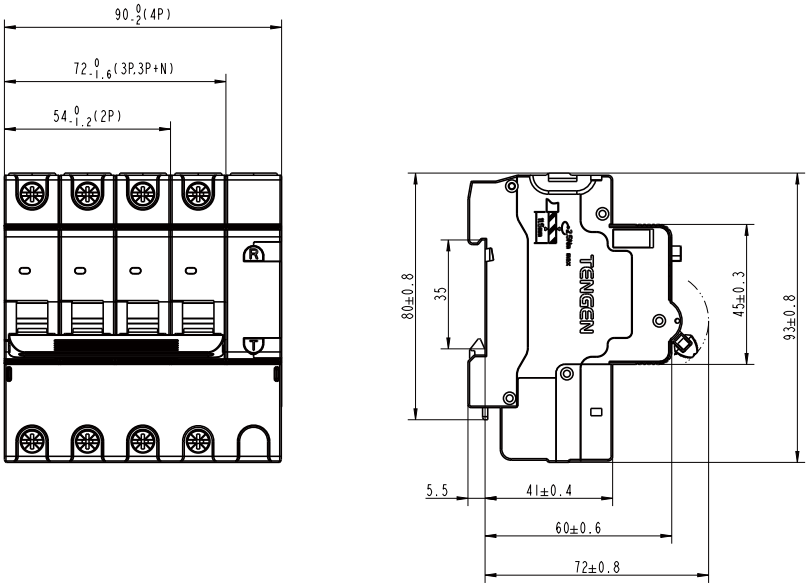

TGB1NLE-63Y Series RCBO, Electronic A/AC Type

5 Order Notice

5.1 Product model and name: such as TGB1NLE-63Y Residual Current Circuit Breaker with Overcurrent Protection

5.2 Trip type: such as: C type

5.3 Number of poles: such as: 2P

5.4 Rated current, such as: 10A

5.5 ated residual operation current: such as: 30mA

5.6 Order quantity: such as: 50 pcs

5.7 Order example: TGB1NLE-63Y 2P C10 30mA, 50 pcs

TGBGLB-63 Series RCBO, Electronic B Type

1 Overview

TGBGLB-63 series residual current circuit breaker with overcurrent protection (hereinafter referred to as leakage circuit breaker) is mainly used in AC 50Hz line with rated working voltage 230V/400V and rated current up to 63A. In case of personal electric shock or when the grid leakage exceeds the specified value, the residual current circuit breaker can quickly cut off the power supply in a very short time for protection of the safety of people and electrical equipment, for overload, short circuit, and overvoltage protection and infrequent conversion of the line under normal conditions, especially suitable for industrial and commercial lighting distribution systems.

2 Type Designation

TG B G LB - 63 1P+N C 16 30mA

- 30mA — Rated residual current (mA)
- 16 — Rated current (A)
- C — Instantaneous trip type (C/D)
- 1P+N — Number of poles(1P+N/2P/3P/3P+N/4P)
- 63 — Frame current (A): 63
- LB — B type residual current circuit breaker with overcurrent protection
- G — Design code.
- B — Miniature Circuit Breaker
- TG — Enterprise code

3 Technical Parameters

3.1 The main technical parameters of the product (see Table 1)

Table 1

Product name		TGBGLB-63
Standard		IEC61009-1
Electrical characteristics		
Number of poles		1P+N, 2P, 3P 3P+N, 4P (N pole is always on)
Rated current (A)	In	6, 10, 16, 20, 25, 32, 40, 50, 63
Rated voltage (V)	Ue	AC230 (1P+N, 2P) AC400 (3P, 3P+N, 4P)
Rated insulation voltage (V)	Ui	690
Rated impulse withstand voltage (kV)	Uimp	4
Rated residual operating current (mA)	IΔn	30, 50, 100, 300
Residual current characteristics		B type
Rated run short circuit breaking capacity (kA)	Ics	6
Rated short circuit breaking capacity (kA)	Icn	6
Instantaneous trip characteristics		C(5In~10In) D(10In~ 14In)
Mechanical properties		
Electrical life		10,000
Mechanical life		20,000
Pollution degree		2
Protection grade		IP20
Normal operation conditions and installation characteristics		
Ambient temperature		-35°C ～ +70°C
Installation altitude		Not exceed 2000m
Wiring terminal		Pressed with screw
Max. wiring capacity (mm^2)		25
Max. ultimate torque (N.m)		2.5

TGBGLB-63 Series RCBO, Electronic B Type

Table 1, Continued

Product name	TGBGLB-63
Installation category	Class II, III
Installation method	TH35-7.5 standard rail
Inlet method	Top inlet
Installable accessories	MX: Shunt release OF: Aux. contact SD: Alarm contact MX+OF: Shunt + Aux. release MV: Overvoltage release MN: Undervoltage release MV+MN: Undervoltage release

3.2 Action characteristics of circuit breaker overcurrent release (see Table 2)

Table 2

No.	Test current (A)	Start state	Set time	Expected outcome	Remarks
a	1.13In	Cold state	t≤1h	No trip	
	1.45In	Followed by 1.1.3In test	t < 1h	trip	The current rises to the specified value within 5s
	2.55In	Cold state	1s < t < 60s (For In ≤ 32A)	trip	
			1s < t < 120s (For In ≤ 32A)		
b	5In	Cold state	t≤0.1s	No trip	Turn on the auxiliary switch for making current
	10In	Cold state	t < 0.1s	trip	
c	10In	Cold state	t≤0.1s	No trip	Turn on the auxiliary switch for making current
	14In	Cold state	t < 0.1s	trip	

Note: The cold state refers to the temperature 30°C without load before the test.

3.3 Protection characteristic curve of circuit breaker

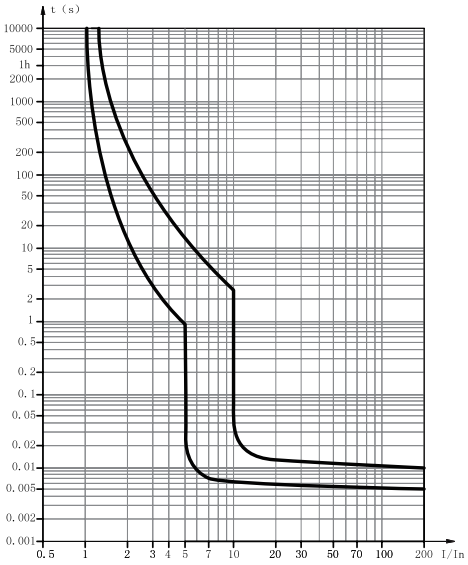

C Type protection characteristic curve

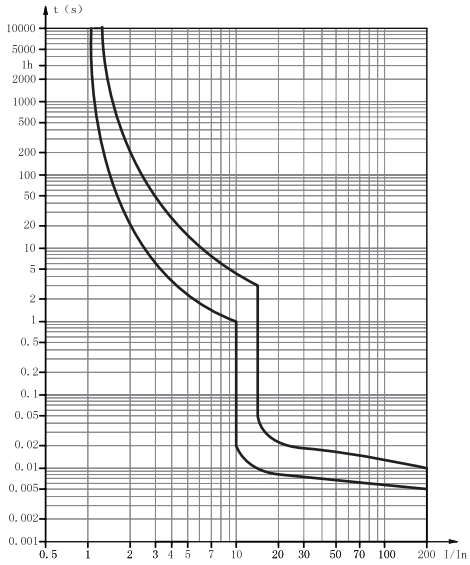

D Type protection characteristic curve

TGBGLB-63 Series RCBO, Electronic B Type

3.4 Wiring: Suitable for wire connection of 25mm^2 and below (see Table 3). The wiring method is that the wire is fixed with screws according to the tightening torque 2.5N·m.

Table 3

Rated current (A)	Cross area of wire (mm^2)
6	1
10	1.5
16 ～ 20	2.5
25	4
32	6
40 ～ 50	10
63	16

4 Outline and Installation Dimensions

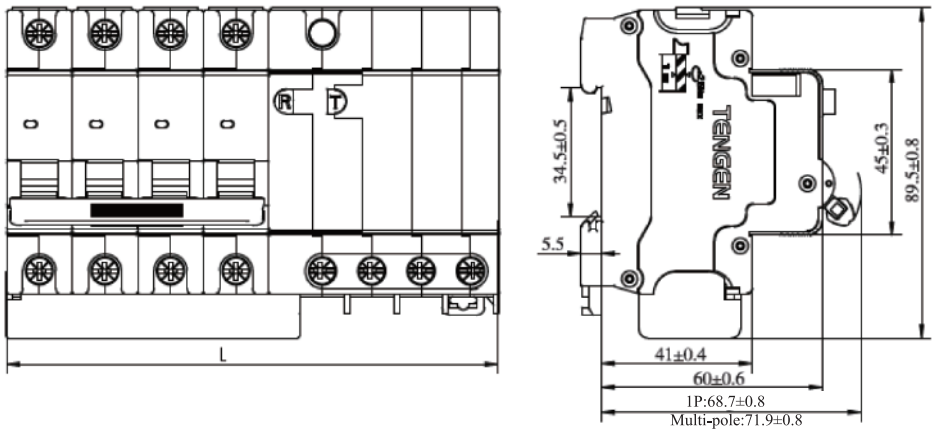

Table 4

Model	Number of poles	L(mm)
TGBGLB-63	1P+N	$54^{+0}_{-1.2}$
TGBGLB-63	2P	$72^{+0}_{-1.6}$
TGBGLB-63	3P	$103.5^{+0}_{-2.3}$
TGBGLB-63	3P+N	$117^{+0}_{-2.6}$
TGBGLB-63	4P	$135^{+0}_{-3.0}$

TGBGLB-63 Series RCBO, Electronic B Type

5 Ordering Notice

5.1 Product model and name, such as: TGBGLB-63 residual current operated circuit breaker
5.2 Trip type, such as: C type
5.3 Number of poles of product, such as 2P
5.4 Rated current, such as 10A
5.5 Rated residual operating current, such as: 30mA
5.6 Order quantity, such as: 50 units
5.7 Order example: TGBGLB-63 2P C10 30mA, 50 units

TGB1NLE(A)-40(H)L Series RCBO, Electronic A/AC Type

1 Overview

TGB1NLE(A)-40(H)L Series RCBO, Electronic A/AC Type is used in the AC 50Hz circuit with the rated voltage 240V and with the rated current up to 40A. When there is a personal electric shock or the leakage current of the grid exceeds the specified value, the Residual Current Circuit Breakers can quickly cut off the power supply within the very short time for personal protection and the safety protection of power equipment; it is also used as infrequent conversion of the line in the event of overload or short circuit and under the normal situations; TGB1NLE(A)-40(H)L is widely used in the charging pile industry and the power distribution lines with DC components.

2 Type Designation

TG B 1N □ - 40 □ L □ □ □

- Rated residual operating current (A)
- Product instantaneous trip type (B/C/D) and rated current (A)
- Number of poles (IP+N)
- Special derived code
- Default: Standard breaking (6kA), H high breaking (10kA)
- Frame rated current (A): 40
- Special derived code: LE-electronic AC leakage circuit breaker; LA-Electronic A type leakage circuit breaker
- Design code
- Miniature circuit breaker
- Enterprise code

3 Main Technical Parameters

Product name	TGB1NLE-40L	TGB1NLE-40HL	TGB1NLA-40L	TGB1NLA-40HL
Standard	IEC/EN 61009-1			
Product certification	TUV, CE, CB			
Electrical characteristics				
Rated voltage (Ue)	AC240V			
Rated frequency (Hz)	50/60Hz			
Rated current (Ie)	10, 16, 20, 25, 32, 40A			
Rated residual operating current IΔn	30mA, 50mA, 75mA, 100mA, 300mA			
Rated operating current type	AC type		A type	
Rated operating current time (t)	≤0.1s			
Rated residual making and breaking capacity IΔm	3000A			
Number of poles	1P+N (N pole cannot be open and closed)			
Rated insulation voltage (Ui)	500V			
Rated impulse withstand voltage (Uimp)	4kV			
Rated ultimate short circuit breaking capacity (ICN)	6kA	10kA	6kA	10kA
Rated run short circuit breaking capacity (ICS)	6kA	7.5kA	6kA	7.5kA
Instantaneous release type	B/C/D type			
Pollution degree	2			

TGB1NLE(A)-40(H)L Series RCBO, Electronic A/AC Type

Product name	TGB1NLE-40L	TGB1NLE-40HL	TGB1NLA-40L	TGB1NLA-40HL
Mechanical characteristics				
Electrical life	4000 times			
Mechanical life	10000 times			
Protection grade	IP20			
Normal working conditions and installation characteristics				
Ambient temperature	-5℃~ +70℃			
Installation altitude	Not exceed 2000m			
Wiring terminal	Screw-pressed			
Max. wiring capacity (mm^2)	10			
Max. ultimate torque (N.m)	Inlet 2.8, outlet 1.5			
Installation category	Class II, Class III			
Installation method	TH35-7.5 standard rail			
Inlet method	Top inlet and bottom outlet			

4 Trip characteristics

4.1 Operation characteristics of overcurrent release (Table 2)

Table 2

Instantaneous trip type	Test current (A)	Start state	Specified time	Expected results	Remarks
B type C type D type	1.13In	Cold state	t≤1h	Non-trip	
	1.45In	1.13In test followed	t ＜ 1h	Trip	Current rises to the specified value stably within 5s
	2.55In	Cold state	1s < t < 60s (For In ≤ 32A) 1s < t < 120s (For In > 32A)	Trip	
B type C type D type	3In	Cold state	t≤0.1s	Non-trip	Turn on aux. switch to power on the current
	5In				
	5In				
B type C type	5In	Cold state	t ＜ 0.1s	Trip	
	10In				
	14In				

Note: the “cold state” refers to no load under the reference temperature +50℃ before test.

TGB1NLE(A)-40(H)L Series RCBO, Electronic A/AC Type

4.2 Circuit breaker protection characteristic curve

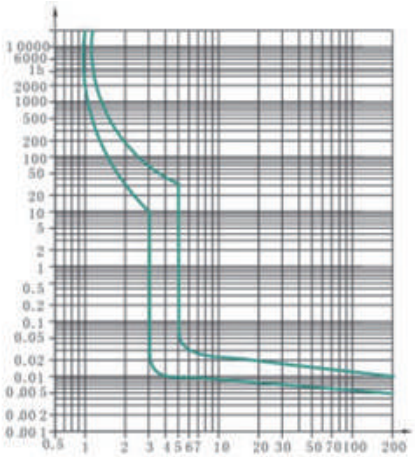

B type protection characteristic curve

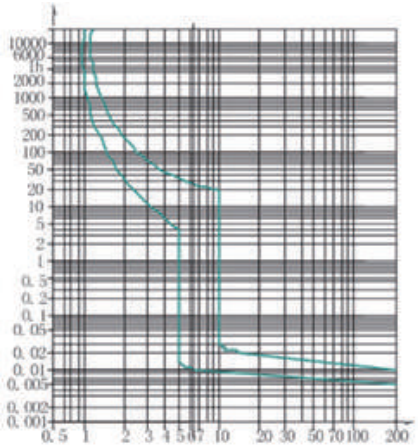

C type protection characteristic curve

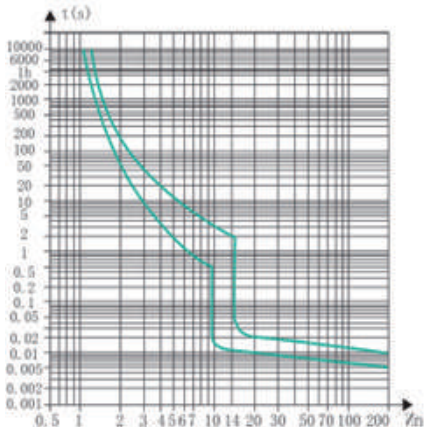

D type protection characteristic curve

4.3 Wiring: suitable for 10 mm2 and below wiring connection (see Table 3)

The wiring is connected through the screw, and the tightening torque is 2.5N.m at the inlet terminal, and is 1.2 N.m at the outlet terminal.

Table 3

Rated current (A)	Sectional area of wire (mm^2)
10	1.5
16 ~ 20	2.5
25	4
32	6
40	10

TGB1NLE(A)-40(H)L Series RCBO, Electronic A/AC Type

5 Installation Dimensions

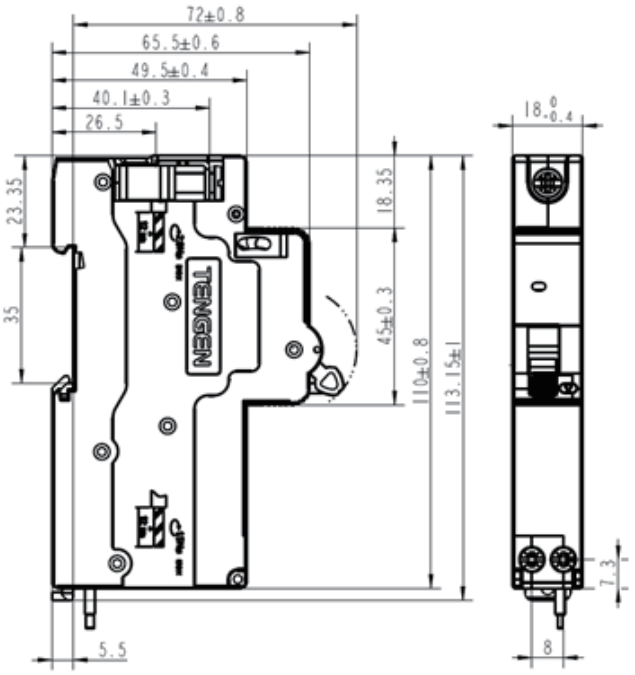

6 Ordering Notice

1. Product name and model, such as TGB1NLE-40HL Residual Current Circuit Breakers;
2. Number of poles: 1P+N
3. Product instantaneous trip type, such as C type;
4. Product rated current, such as 32A;
5. Product rated residual operating current, such as 30mA;
6. Product quantity, such as 108 units;
7. Order example, TGB1NLE-40HL 1P+N C16 30mA, 108 units.

TGB1NLE(LA)M-40 Series RCBO, Electronic A/AC Type

1 Overview

TGB1NLE(LA)M-40 Series RCBO, Electronic A/AC Type is used in the AC 50Hz circuit with the rated voltage 220/230/240V and with the rated current up to 40A. When there is a personal electric shock or the leakage current of the grid exceeds the specified value, the Residual Current Circuit Breakers can quickly cut off the power supply within the very short time for personal protection and the safety protection of power equipment; it is also used as infrequent conversion of the line in the event of overload or short circuit and under the normal situations; It is particularly suitable for lighting and distribution systems in buildings, industry and commerce.
The product complies with the IEC/EN 61009-1, ROHS2.0 standard.

2 Type Designation

TG B 1N LE M – 40 A / 1P+N C 16 30

- 30 — Rated residual operating current (mA)
- 16 — Rated current (A)
- C — Product instantaneous trip type (B/C)
- 1P+N — Number of poles: 1P+N
- A — Breaking capacity: A means 4.5kA; default: 6kA
- 40 — Frame rated current (A): 40
- M — Product feature (small-size mini type)
- LE — LE-Electronic AC type residual current circuit breakers
  LA-Electronic A type residual current circuit breakers
- 1N — Design code
- B — Miniature circuit breaker
- TG — Enterprise characteristic code

3 Main Technical Parameters

Table 1

Product name	TGB1NLEM-40A	TGB1NLEM-40	TGB1NLAM-40A	TGB1NLAM-40
Standard	IEC/EN 61009-1, ROHS2.0			
Product certification	TUV			
Electrical characteristics				
Rated voltage (Ue)	AC230V			
Rated frequency (Hz)	50Hz			
Rated current (Ie)	6, 10, 16, 20, 25, 32, 40A			
Rated residual operating current IΔn	10mA, 30mA, 50mA			
Rated operating current type	AC type		A type	
Rated operating current time (t)	≤0.1s			
Rated residual making and breaking capacity IΔm	500V			
Number of poles	1P+N (N pole cannot be open and closed)			
Rated insulation voltage (Ui)	500V			
Rated impulse withstand voltage (Uimp)	4kV			
Rated ultimate short circuit breaking capacity (Icn)	4.5kA	6kA	4.5kA	6kA
Rated operating short circuit breaking capacity (Ics)	4.5kA	6kA	4.5kA	6kA
Instantaneous release type	B/C type			
Pollution degree	2			

TGB1NLE(LA)M-40 Series RCBO, Electronic A/AC Type

Product name	TGB1NLEM-40A	TGB1NLEM-40	TGB1NLAM-40A	TGB1NLAM-40
Mechanical characteristics				
Electrical life	4000 times			
Mechanical life	10000 times			
Protection grade	IP20			
Normal working conditions and installation characteristics				
Ambient temperature	-35℃~ +70℃			
Installation altitude	Not exceed 2000m			
Wiring terminal	Screw-pressed			
Max. wiring capacity (mm^2)	16			
Max. ultimate torque (N.m)	2.5			
Installation category	Class II			
Installation method	TH35-7.5 standard rail			
Inlet method	Top inlet and bottom outlet			

4 Trip characteristics

4.1 Operation characteristics of overcurrent release (Table 2)

Table 2

Instantaneous trip type	Test current (A)	Start state	Specified time	Expected results	Remarks
B type C type	1.13In	Cold state	t≤1h	Non-trip	
	1.45In	1.13In test followed	t < 1h	Trip	Current rises to the specified value stably within 5s
	2.55In	Cold state	1s < t < 60s (For In ≤ 32A)	Trip	
			1s < t < 120s (For In > 32A)		
B type	3In	Cold state	t≤0.1s	Non-trip	Turn on aux. switch to power on the current
	5In			Trip	
C type	5In	Cold state	t < 0.1s	Non-trip	
	10In			Trip	

Note: the “cold state” refers to no load under the reference temperature +30℃ before test.

4.2 Circuit breaker protection characteristic curve

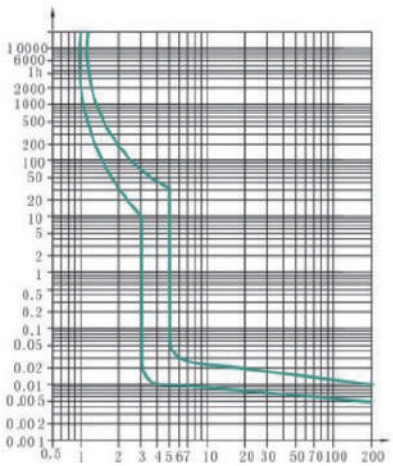

B type protection characteristic curve

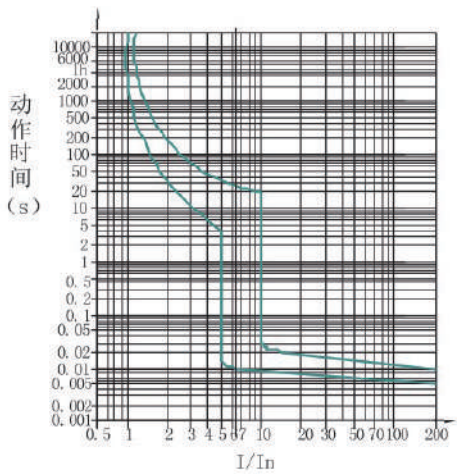

C type protection characteristic curve

TGB1NLE(LA)M-40 Series RCBO, Electronic A/AC Type

5 Installation Dimensions

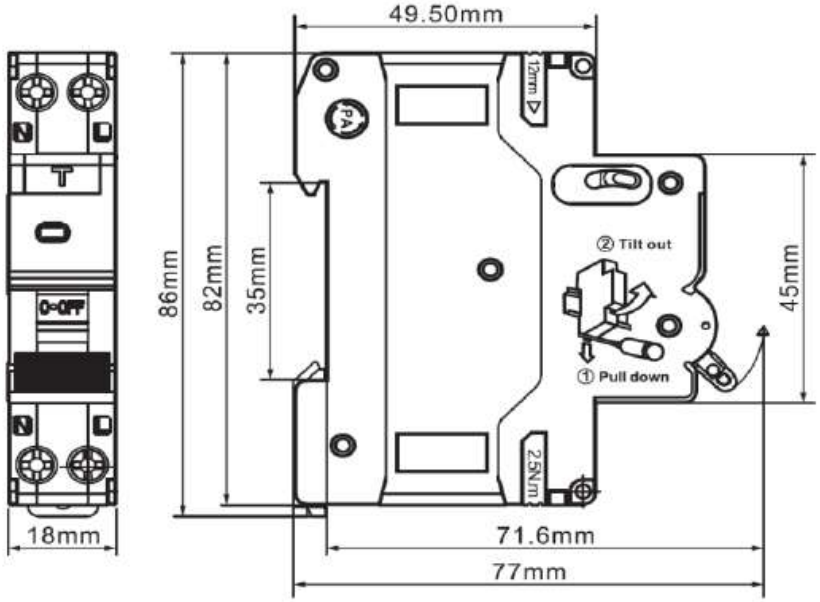

6 Ordering Notice

6.1 Product name and model, such as TGB1NLEM-40A Residual Current Circuit Breakers;
6.2 Product instantaneous trip type, such as C type;
6.3 Number of poles, such as 1P+N;
6.4 Product rated current, such as 32A;
6.5 Product rated residual operating current, such as 30mA;
6.6 Product breaking capacity, such as 4.5KA;
6.7 Qty., such as 100 units;
6.8 Order example, TGB1NLEM-40A 1P+N C32 30mA, 100 units.

TGH1N-125 Series Switch Disconnector

1 Overview

TGH1N-125 switch disconnector is mainly used in the AC 50/60Hz control and power distribution circuit in 230V(1P) and 400V(2P,3P,4P), and rated current to 125A. As the main switch in the terminal composite apparatus, it is also used for the infrequent control of various small-power electrical apparatus and lighting, and widely used in many places such as industrial and mining enterprises, high-rise buildings, business, and household.

2 Type Designation

TG H 1N - 125

- 125 — Frame current (A)
- 1N — Design code.
- H — Switch disconnector
- TG — Enterprise code

3 Technical Parameters

3.1 The main technical parameters of the product (see Table 1)

Table 1

Product name	TGH1N-125
Standard	IEC60947-3
Certificate	CE
Electrical characteristics	
Number of poles	1P, 2P, 3P, 4P
Rated frequency (Hz)	50/60
Frame current (A) Inm	125
Rated current (A) Ie	20, 25, 32, 40, 50, 63, 80, 100, 125
Rated voltage (V) Ue	AC230(1P) AC400(2P, 3P, 4P)
Rated insulation voltage (V) Ui	690
Rated impulse withstand voltage (kV) Uimp	6
Rated short-time withstand current (kA) Icw	12Ie/1s
Rated short-circuit making capacity (kA) Icm	20Ie/0.1s
Rated making and breaking capacity (kA) Icm	3Ie, 1.05Ie, COSθ=0.65
Pollution degree	3
Electrical and mechanical accessories	-
Mechanical properties	
Electrical life	10,000 times
Mechanical life	20,000 times
Protection grade	IP20
Normal operation conditions and installation characteristics	
Ambient temperature	-35℃ ～ +70℃
Installation altitude	≤ 2,000 meters
Terminals	Fixed with screws
Maximum wiring capacity (mm²)	50
Maximum limit torque (Nm)	2.5 (20-63A) 3.5 (80-125A)
Installation category	Class III
Installation method	TH35-7.5 standard rail
Incoming method	Top inlet and bottom inlet

TGH1N-125 Series Switch Disconnector

3.2 Wiring: Suitable for wire connection of 50mm^2 and below (see Table 3). Wiring connection adopt the screw pressing method, with the torque of 2.5N.m (20-63A) and with the torque of 3.5N.m (80-125A) .

Table 2

Rated current (A)	Cross area of wire (mm^2)
20	2.5
25	4
32	6
40	10
50	10
63	16
80	25
100	35
125	50

4 Outline and Installation Dimensions

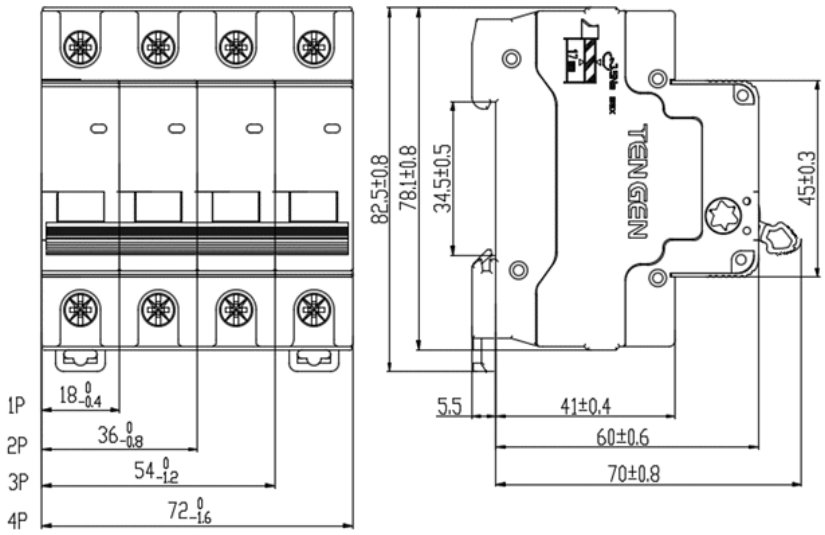

5 Ordering Notice

5.1 Product model and name, such as: TGH1N-125 switch disconnector
5.2 Number of poles of the product, such as 2P
5.3 Rated current, such as 100A
5.4 Order quantity, such as: 50 units
5.5 Order example: TGH1N-125 2P 100, 50 units

TGB1N-MX Shunt Release for TGB1N-63

1 Overview

TGB1N-MX shunt release (hereinafter referred to as release) is mainly assembled with the TGB1N series miniature circuit breaker with Frame current 63A and with the residual current action circuit breaker with frame current 63A (32A), suitable for AC 50/60Hz with rated voltage up to 400V for remote shunt tripping operation.

Standard: IEC 60947-1

2 Technical Parameters

Modulus	2（18mm）		
Working voltage (V AC)	415	220-240	100-130
Trip power consumption (VA AC)	625	184	44
Working voltage (V DC)	110-130 DC	48 AC/DC	24 AC/DC
Trip power consumption (VA)	45	48	185
Shunt life	500		
Max. wiring area (mm^2)	2.5		
Installation	Installed after assembling with circuit breaker		

3 Operating Conditions

3.1 Ambient temperature: -35℃~+70℃

3.2 Altitude: Not exceed 2,000 meters

3.3 Pollution degree: 2

3.4 Installation category: Class II and III

3.5 Installation method: TH35-7.5 mounting rail is used

TGB1N- OF Auxiliary Contact for TGB1N-63

1 Overview

TGB1N - OF auxiliary contact is used in the AC 50/60Hz line with the appointed heat current up to 6A, with rated voltage up to 415V or DC rated voltage up to 130V, and is mainly assembled with the TGB1N series miniature circuit breaker with shell frame current 63A and with the residual current action circuit breaker with shell frame current 63A (32A) for remote circuit breaker ON/OFF signal indication.

Standard: IEC 60947-5-1.

2 Technical Parameters

Modulus	1（9mm）		
Working voltage (V AC)	415	240	
Rated current (A AC)	3	6	
Working voltage (V DC)	130	48	24
Rated current (A DC)	1	2	6
Mechanical life	6050 times		
Max. wiring area (mm²)	2.5		
Installation	Installed after assembling with circuit breaker		
Use category	AC12\DC12		

3 Operating Conditions

3.1 Ambient temperature: -35℃~+70℃

3.2 Altitude: Not exceed 2,000 meters

3.3 Pollution degree: 2

3.4 Relative humidity: ≤95%

TGB1N- SD Alarm Contact for TGB1N-63

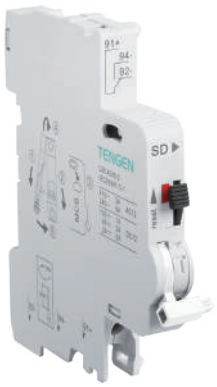

1 Overview

TGB1N – SD (for 63 shell frame) alarm contact is used in the AC 50/60Hz line with the appointed heat current up to 6A, with rated voltage up to 415V or DC rated voltage up to 130V, and is mainly assembled with the TGB1N series miniature circuit breaker with frame current 63A and with the residual current action circuit breaker with frame current 63A (32A) for remote circuit breaker failure alarm signal indication.

Standard: IEC 60947-5-1.

2 Technical Parameters

Modulus	1（9mm）		
Working voltage (V AC)	415	240	
Rated current (A AC)	3	6	
Working voltage (V DC)	130	48	24
Rated current (A DC)	1	2	6
Mechanical life	6050 times		
Max. wiring area (mm^2)	2.5		
Installation	Installed after assembling with circuit breaker		
Use category	AC12\DC12		
Function requirements	Trip alarm		

3 Operating Conditions

3.1 Ambient temperature: -35℃~+70℃

3.2 Altitude: Not exceed 2,000 meters

3.3 Pollution degree: 2

3.4 Relative humidity: ≤95%

TGB1N-MX+OF Shunt and Auxiliary Release for TGB1N-63

1 Overview

TGB1N-MX+OF shunt and auxiliary release (hereinafter referred to as release) is mainly assembled with the TGB1N series miniature circuit breaker with shell frame current 63A and with the residual current action circuit breaker with shell frame current 63A (32A), suitable for AC 50/60Hz line with rated voltage up to 400V for remote shunt tripping operation and for remote circuit breaker ON/OFF signal indication. The TGB1N-MX+OF product is of the active integrated type; if passive type is required, the separate TGB1N-MX and TGB1N-OF assembly is selected to realize the passive function.

Standard: IEC 60947-1

2 Technical Parameters

Modulus		2（18mm）		
MX parameters	Working voltage (V AC)	415	220-240	100-130
	Trip power consumption (VA AC)	625	184	44
	Working voltage (V DC)	110-130 DC	48 AC/DC	24 AC/DC
	Trip power consumption (VA)	45	48	185
	Shunt life	500		
OF parameters	Working voltage (V AC)	415	240	
	Rated current (A AC)	3	6	
	Working voltage (V DC)	130	48	24
	Rated current (A DC)	1	2	6
	Mechanical life	6050 times		
Max. wiring area (mm^2)		2.5		
Installation		Installed after assembling with circuit breaker		

3 Operating Conditions

3.1 Ambient temperature: -35℃~+70℃

3.2 Altitude: Not exceed 2,000 meters

3.3 Pollution degree: 2

3.4 Installation category: Class II and III

3.5 Installation method: TH35-7.5 mounting rail is used

TGB1N-MV Overvoltage Release for TGB1N-63

1 Overview

TGB1N-MV (for 63 shell frame) overvoltage release (hereinafter referred to as release) is mainly used in AC 50/60Hz with rated voltage of 230V, and is assembled with the TGB1N series miniature circuit breaker with frame current 63A and with the residual current circuit breaker with frame current 63A (32A) for overvoltage protection.

Standard: IEC 60947-2

2 Technical Parameters

Modulus	2（18mm）
Working voltage (overvoltage V AC)	280±5%
Overvoltage life	500times
Max. wiring area (mm^2)	2.5
Installation	Installed after assembling with circuit breaker

3 Operating Conditions

3.1 Ambient temperature: -35℃~+70℃

3.2 Altitude: Not exceed 2,000 meters

3.3 Pollution degree: 2

3.4 Relative humidity: ≤95%

TGB1N-MN No-voltage Release for TGB1N-63

1 Overview

TGB1N-MN (for 63 shell frame) No-voltage release (hereinafter referred to as release) is mainly used in AC 50/60Hz with rated voltage of 230V, and is assembled with the TGB1N series miniature circuit breaker with shell frame current 63A and with the residual current action circuit breaker with shell frame current 63A (32A) for No-voltage protection.

Standard: IEC 60947-2

2 Technical Parameters

Modulus	2（18mm）
Working voltage (No-voltage V AC)	161±5%
No-voltage life	500times
Max. wiring area (mm^2)	2.5
Installation	Installed after assembling with circuit breaker

3 Operating Conditions

3.1 Ambient temperature: -35℃~+70℃

3.2 Altitude: Not exceed 2,000 meters

3.3 Pollution degree: 2

3.4 Relative humidity: ≤95%

TGB1N-MV+MN Overvoltage and No-voltage Release for TGB1N-63

1 Overview

TGB1N-MV+MN overvoltage and No-voltage release (hereinafter referred to as release) is mainly used in AC 50/60Hz with rated voltage of 230V, and is assembled with the TGB1N series miniature circuit breaker with shell frame current 63A and with the residual current action circuit breaker with frame current 63A (32A) for overvoltage and No-voltage protection.

Standard: IEC 60947-2

2 Technical Parameters

Modulus	2（18mm）
Working voltage (Overvoltage V AC)	Single-phase, three-phase four-wire protection voltage: AC280（1±5%）V, AC170（1±5%）V Three-phase protection voltage: AC460（1±5%）V, AC300（1±5%）V
Working voltage (No-voltage V AC)	161±5%
Mechanical life	500 times
Max. wiring area (mm^2)	2.5
Installation	Installed after assembling with circuit breaker

3 Operating Conditions

3.1 Ambient temperature: -35℃~+70℃

3.2 Altitude: Not exceed 2,000 meters

3.3 Pollution degree: 2

3.4 Relative humidity: ≤95%

TGB1N-MNS No-voltage Release for TGB1N-63

1 Overview

TGB1N-MNS (for 63 shell frame) No-voltage release (hereinafter referred to as release) is mainly used in AC 50/60Hz with rated voltage of 230V, and is assembled with the TGB1N series miniature circuit breaker with frame current 63A and with the residual current action circuit breaker with frame current 63A (32A) for zero voltage protection.

Standard: IEC 60947-2

2 Technical Parameters

Number of poles	2(18mm)
Working voltage (V)	230
Protection voltage	Zero voltage protection
Max. wiring area (mm^2)	2.5
Installation	Installed after assembling with circuit breaker

3 Operating Conditions

3.1 Ambient temperature: -35℃~+70℃

3.2 Altitude: Not exceed 2,000 meters

3.3 Pollution degree: 2

3.4 Relative humidity: ≤95%

Accessories of TGB3 Series Circuit Breaker

1 Overview

MV3

MX+OF3

MX3

OF+OF3

Accessories of TGB3 Series Circuit Breaker are mainly assembled with TGB3 series miniature circuit breakers and residual current operated circuit breakers, including auxiliary contact OF3, alarm contact SD3, shunt release MX3, overvoltage release MV3, undervoltage release MN3, overvoltage and undervoltage release MV+MN3, voltage loss release MNs3 and busbar accessories. The specific standards and applications are listed in Table 1.

(Table 1)

Model	Main purpose
OF3/SD3/OF+SD3	Remote indication of circuit breaker on/off status / Remote indication of circuit breaker fault alarm
MX3/MX+OF3	Remote control of the power on/off of the circuit breaker / Remote control of the power on/off of circuit breaker and indicate of the on/off state
MV3/MN3/MNS3/ MV+MN3	Overvoltage protection/ undervoltage protection/ voltage loss protection/ overvoltage and undervoltage protection

2 Normal Operation, Installation and Storage Conditions

(1) Normal working conditions

a. Ambient air temperature: The upper limit of ambient air temperature does not exceed +70°C, the lower limit is not below -35°C, and the mean temperature within 24h does not exceed +40°C;

b. Altitude: The altitude of the installation site does not exceed 2000m;

c. Atmospheric conditions: The atmosphere air is clean (there is no explosion hazard medium, and there is no gas and dust insufficient in the medium to cause metal corrosion and damage to the insulation); the relative humidity of the atmosphere does not exceed 50% when the ambient air temperature is +40°C, and higher relative humidity is allowed at lower temperatures (for example, the relative humidity is up to 90% at +20°C); special measures should be taken for condensation occasionally occurred due to temperature changes;

(2) Normal installation conditions

a. Installation category: Class II, Class III;

b. Installation environmental pollution degree: Level 2;

c. Protection grade: IP20;

d. Installed in a place where there is no significant impact and vibration and no rain and snow invasion;

(3) Normal storage and transportation conditions

a. Storage temperature: The upper limit of temperature shall not exceed +80°C, and the lower limit shall not be below -40°C;

b. Storage humidity: The relative humidity does not exceed 95% at +25°C;

c. Please handle the product gently during the transportation, do not upside it down, and prevent severe impact and rain and snow invasion.

Accessories of TGB3 Series Circuit Breaker

3 Main Technical Parameters

OF+SD3

OF3

SD3

(1) Basic parameters

a. Rated insulation voltage Ui: 690V;

b. Rated impulse withstand voltage Uimp: 2.5kV;

c. Max. wiring capacity: 1.5mm2, tightening torque: 1N.m;

d. Mechanical and electrical life: OF3/SD3/SD+OF3 6050 times: Others: 4000 times:

(2) The main performance indicators are listed in Table 2;

(Table 2)

Name & Model	Operating voltage (V)	Rated current (A)	Use category
Aux. contact OF3, alarm contact SD3, aux. alarm integrated contact SD/ OF+OF3	AC 415	3	AC12
	AC 240	6	
	DC 130	1	DC12
	DC 48	2	
	DC 24	6	
Shunt release MX3, shunt aux. release MX+OF3	AC 110V-415V	1.5	AC12
	DC 110-220V		AC12 DC12
	AC/DC 48V	2	
	AC/DC 24V	6	
	AC/DC 12V	6	
Overvoltage release MV3	Protection voltage: AC280±5%V		/
Undervoltage release MN3	Protection voltage: AC161±5%V		
Voltage loss release MNs3	Protection voltage: <80V		
Over- and under-voltage releases MV+ MN3	Single-phase, three-phase four-wire protection voltage: AC280±5%V, AC161±5%V; Three-phase three-wire protection voltage: AC460 (1±5%) V, AC300 (1±5%) V		

4 Installation, Operation, Outline Dimensions and Assembly Instructions

(1) Installation and Operation

a. The product is assembled with TGB3 series miniature circuit breaker and residual current operated circuit breaker, and cannot be used separately;

b. The product is assembled on the left side of the circuit breaker, and the total width of the accessory assembly is within 54mm; the sequence and quantity from left to right: OF3, SD3(3 max) + MX3, MX+OF3, MV3, MN3, MNs3, MV+MN(2 max) + MCB;

c. Before installation, check whether the technical parameters of the product meet the use requirements, and operate the handle several times to turn on and turn off the product several and check whether the mechanism works reliably;

d. When installation, please tighten the copper wire according to 1N.m torque; meanwhile, after installation, check whether the copper wire is connected firmly by shaking the wire; if not, please re-tighten the copper wire according to 1N.m torque.

e. The TH35 - 7.5 (1.0) type standard rail is used for installation, as illustrated in Fig. 1.

Accessories of TGB3 Series Circuit Breaker

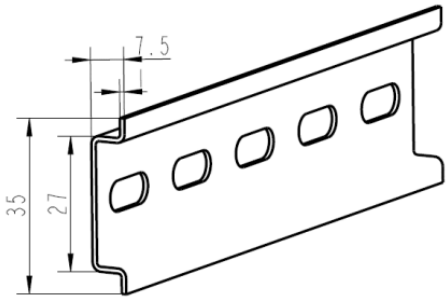

Fig. 1 Standard rail

(2) Outline and installation dimensions, see Fig. 2, Fig. 3 (unit: mm)

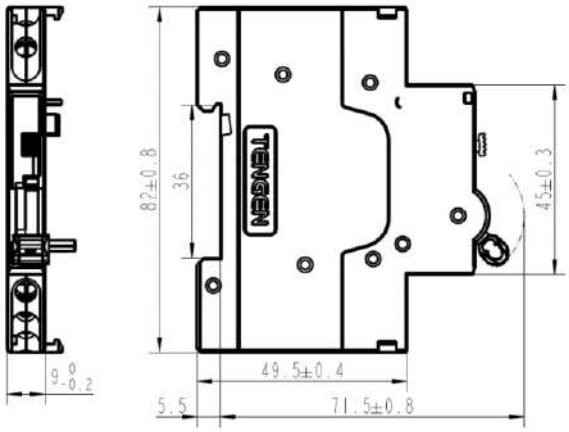

Fig. 2 OF3/SD3, SD+OF3 outline and installation dimensional drawings

Status indicator:

a. OF3: In case of power-off of the product, 11 and 12 are connected, and 11 and 14 are disconnected;
   When power-on, 11 and 12 are disconnected and 11 and 14 are connected.
b. SD3: In case of power-off of the product, 91 and 92 are connected, and 91 and 94 are disconnected;
   When power-on, 91 and 92 are disconnected and 91 and 94 are connected.
   When the circuit breaker trips due to fault, 91 and 92 are disconnected and 91 and 94 are connected.

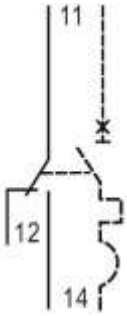

SD3 wiring schematic diagram

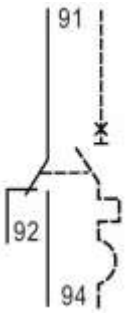

OF3 wiring schematic diagram

Accessories of TGB3 Series Circuit Breaker

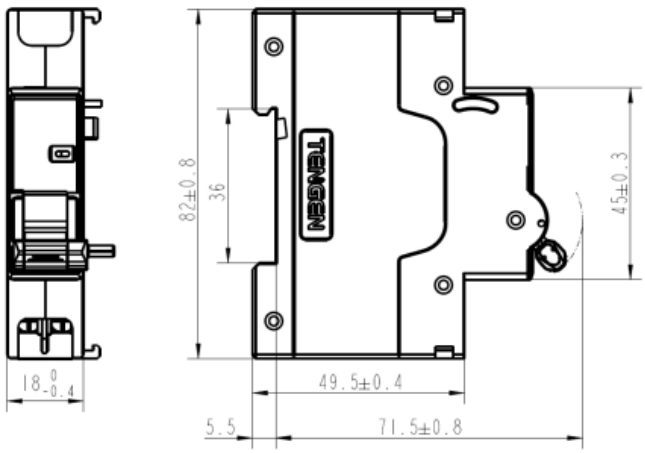

Fig. 3 MX3/MX+OF3 /MV3/MN3/MNS3/MV+MN3 Outline and installation dimension drawings

Status indicator:

a. MX+OF3: In case of power-off of the product, 11 and 12 are connected, and 11 and 14 are disconnected;
   When power-on, 11 and 1 2 are disconnected and 11 and 14 are connected
   The shunt release control power supply is connected to the C1/- and C2/+ terminals, and the auxiliary contacts are connected to 11, 12 (normally closed) and 14 (normally open).
b. MX3: Shunt release control power supply is connected to the C1/- and C2/+ terminals.
c. MV3/MN3/MNS3/MV+MN3: Over- and under-voltage release control is connected to the protected products N and L to realize linkage.

(3) The assembly steps of the product and the circuit breaker are illustrated in Fig. 4, Fig. 5 and Fig. 6

a. Operate the handle of the accessory product to the OFF state;
b. Operate the handle of the circuit breaker to the OFF state;
c. Pry open the sealing sheet of the assembly hole on the left side of the circuit breaker;
d. Assemble the upper hook on the accessory downwards in the corresponding slot on the upper part of the circuit breaker;
e. Assemble the lower hook on the accessory downwards in the corresponding slot on the lower part of the circuit breaker; insert the extruded part of the accessory handle into the hole on the handle of circuit breaker.

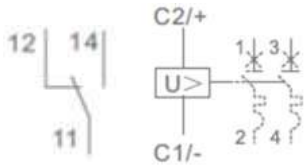

MX+OF Passive Wiring Schematic Diagram

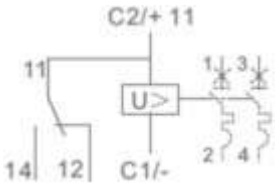

MX+OF Active Wiring Schematic Diagram

Accessories of TGB3 Series Circuit Breaker

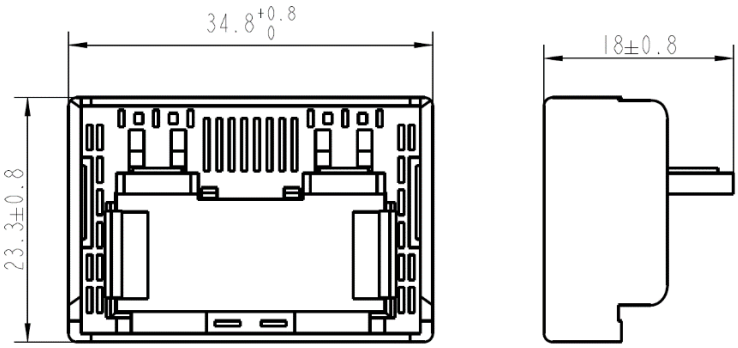

Fig. 4 Busbar outline and installation dimensional drawings

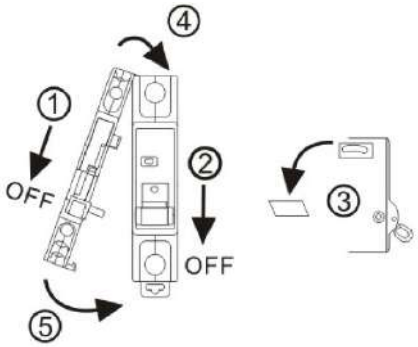

Fig. 5 OF3/SD3/OF+SD3 assembly diagram

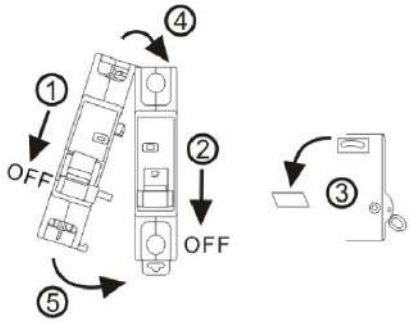

Fig. 6 MX3/MX+OF3/MV3/MN3/ MV+MN3/MNS3 assembly diagram

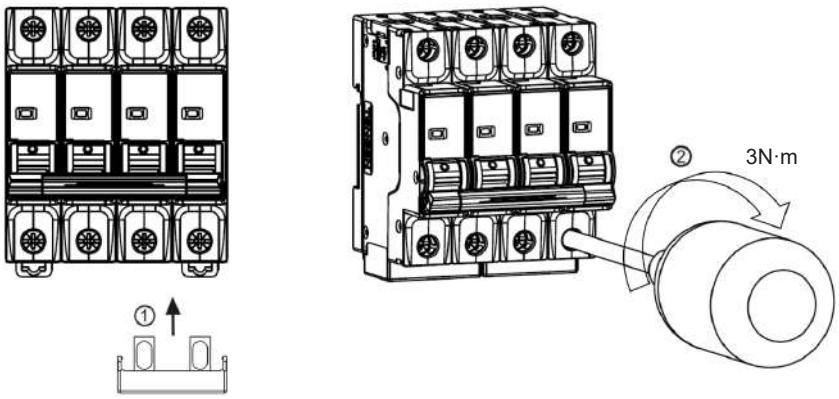

Fig. 7 Busbar assembly diagram

Accessories of TGB3 Series Circuit Breaker

- The shunt or undervoltage release is assembled preferentially, and then the aux. contact is assembled.

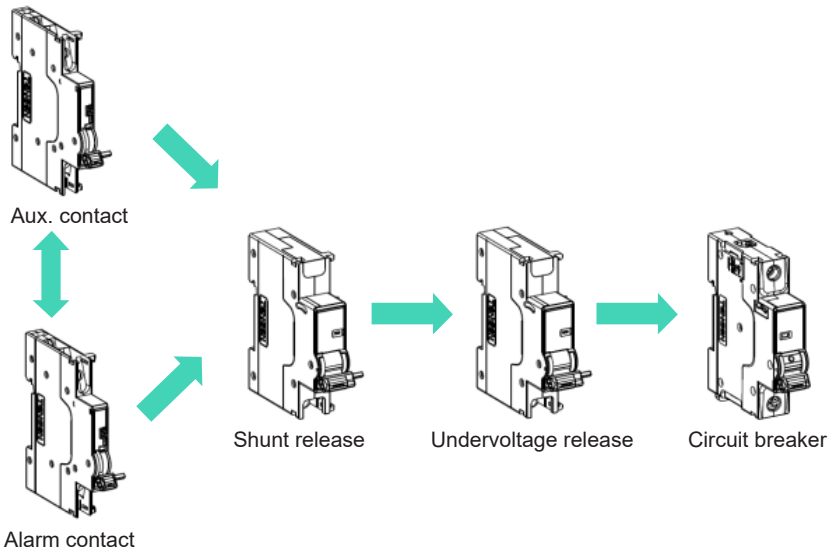

Fig. 8 Accessory combination assembly diagram

Instructions:
The product is assembled on the left side of the circuit breaker, and the total width of the accessory assembly is within 54mm, the sequence and quantity from left to right are as follows:
OF3, SD3,OF+SD3(3 max) + MX3, MX+OF3, MV3, MN3, MNS3, MV+MN3(2 max) + MCB.

- Accessory assembly diagram

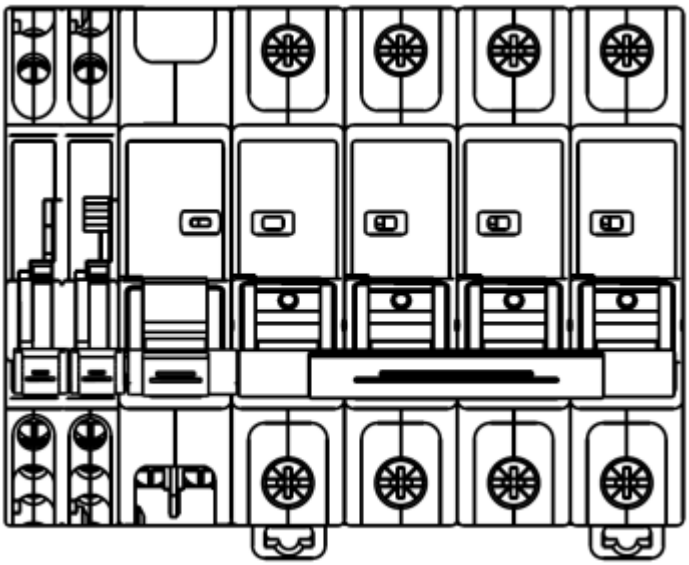

Aux. contact +Alarm contact + Shunt release + Miniature circuit breaker

Accessories of TGB3 Series Circuit Breaker

- Busbar assembly diagram

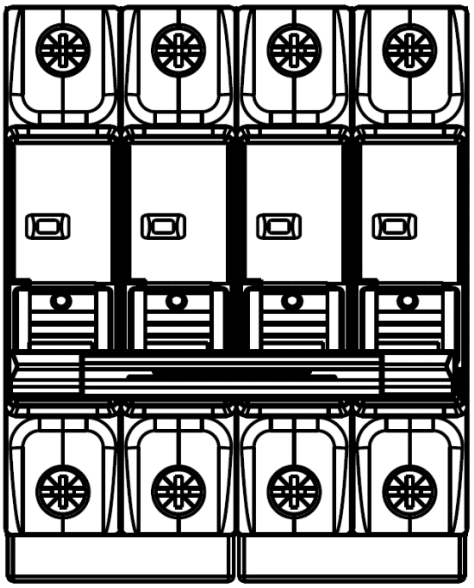

Busbar + Miniature circuit breaker

5 Maintenance and Service

(1) During maintenance and service, the product must not be energized, and those tasks must be carried out by the qualified professionals;

(2) It is recommended to carry out maintenance and service once a year under normal working conditions, and the common faults and solutions are listed in Table 3.

(Table 3)

Common fault	Cause	Solution
Unable to close	The operating mechanism is failed	Replace the product by a new one
Too high temperature	The copper wire is not tightened firmly	Tighten the screws according to the 1N.m torque without any looseness
	The sectional area of the copper wire selected is too small	Replaced by an appropriate copper wire
No power	The peeling part of wire is too short	Re-peel the wire as required
	The wire is not tightened firmly or is loose	Tighten the screws according to the 1N.m torque without any looseness

6 Ordering Notice

Please specify the following items when ordering:

(1) Name and model of product accessory, such as shunt release MX;

(2) Operating voltage, such as AC110V-415V;

(3) Product qty., such as 100 units;

Order example: Shunt release MX, AC415V, 100 units.

TGB1N-MX1 Shunt Release for TGB1N-125

1 Overview

TGB1N-MX1 shunt release (hereinafter referred to as release) is mainly assembled with the TGB1N series miniature circuit breaker with frame current 125A at the right side, suitable for AC 50/60Hz with rated voltage up to 400V for remote shunt tripping operation.

Standard: IEC 60947-1.

2 Technical Parameters

Modulus	2（18mm）		
Working voltage (V AC)	415	220-240	100-130
Trip power consumption (VA AC)	625	184	44
Working voltage (V DC)	110-130 DC	48 AC/DC	24 AC/DC
Trip power consumption (VA)	45	48	185
Shunt life	500		
Max. wiring area (mm^2)	2.5		
Installation	Installed after assembling with circuit breaker		

3 Operating Conditions

3.1 Ambient temperature: -35℃~+70℃

3.2 Altitude: Not exceed 2,000 meters

3.3 Pollution degree: 2

3.4 Installation category: Class II and III

3.5 Installation method: TH35-7.5 mounting rail is used

TGB1N- OF1 Auxiliary Contact for TGB1N-125

1 Overview

TGB1N – OF1 auxiliary contact is used in the AC 50/60Hz with the appointed heat current up to 6A, with rated voltage up to 415V or DC rated voltage up to 130V, and is mainly assembled with the TGB1N series miniature circuit breaker with frame current 125A and with the residual current action circuit breaker with frame current 125A for remote circuit breaker ON/OFF signal indication.

Standard: IEC 60947-5-1.

3 Technical Parameters

Modulus	1（9mm）		
Working voltage (V AC)	415	240	
Rated current (A AC)	3	6	
Working voltage (V DC)	130	48	24
Rated current (A DC)	1	2	6
Making and breaking capacity	6050 times		
Max. wiring area (mm^2)	2.5		
Installation	Installed after assembling with circuit breaker		
Use category	AC12\DC12		

3 Operating Conditions

3.1 Ambient temperature: -35℃~+70℃

3.2 Altitude: Not exceed 2,000 meters

3.3 Pollution degree: 2

3.4 Relative humidity: ≤95%

TGB1N- SD1 Alarm Contact for TGB1N-125

1 Overview

TGB1N-SD1 alarm contact is used in the AC 50/60Hz with the appointed heat current up to 6A, with rated voltage up to 415V or DC rated voltage up to 130V, and is mainly assembled with the TGB1N series miniature circuit breaker with the frame current 125A and with the residual current circuit breaker with frame current 125A for remote circuit breaker failure alarm signal indication.

Standard: IEC 60947-5-1.

2 Technical Parameters

Modulus	2（9mm）		
Working voltage (V AC)	415	240	
Rated current (A AC)	3	6	
Working voltage (V AC)	130	48	24
Rated current (A AC)	1	2	6
Making and breaking capacity	6050 times		
Max. wiring area (mm^2)	2.5		
Installation	Installed after assembling with circuit breaker		
Use category	AC12/DC12		
Function requirements	Trip alarm		

3 Operating Conditions

3.1 Ambient temperature: -35℃~+70℃

3.2 Altitude: Not exceed 2,000 meters

3.3 Pollution degree: 2

3.4 Relative humidity: ≤95%

TGB1N-MX+OF1 Shunt and Auxiliary Release for TGB1N-125

1 Overview

TGB1N-MX+OF1 shunt and auxiliary release (hereinafter referred to as release) is mainly assembled with the TGB1N series miniature circuit breaker with frame current 125A at the right side, suitable for AC 50/60Hz with rated voltage up to 400V for remote shunt tripping operation and for remote circuit breaker ON/OFF signal indication. The TGB1N-MX+OF1 product is of the passive integrated type.

2 Technical Parameters

Modulus		2（9mm）		
MX parameters	Working voltage (V AC)	415	220-240	100-130
	Trip power consumption (VA AC)	625	184	44
	Working voltage (V DC)	110-130	48 AC/DC	24 AC/DC
	Trip power consumption (VA)	45	48	185
	Shunt life	500		
OF parameters	Working voltage (V AC)	415	≤240	
	Rated current (A AC)	3	6	
	Working voltage (V DC)	130	48	≤24
	Rated current (A DC)	1	2	6
	Mechanical life	6050 times		
Max. wiring area (mm^2)		2.5		
Installation		Installed after assembling with circuit breaker		

3 Operating Conditions

3.1 Ambient temperature: -35℃~+70℃

3.2 Altitude: Not exceed 2,000 meters

3.3 Pollution degree: 2

3.4 Installation category: Class II and III

3.5 Installation method: TH35-7.5 mounting rail is used

TGB1N-MV1 Overvoltage Release for TGB1N-125

1 Overview

TGB1N-MV1 (for 125 shell frame) overvoltage release (hereinafter referred to as release) is mainly used in AC 50/60Hz with rated voltage of 230V, and is assembled with the TGB1N series miniature circuit breaker with frame current 125A at the right side for overvoltage protection.

Standard: IEC 60947-2

2 Technical Parameters

Modulus	2（18mm）
Working voltage (overvoltage V AC)	280±5%
Overvoltage life	500 times
Max. wiring area (mm^2)	2.5
Installation	Installed after assembling with circuit breaker

3 Operating Conditions

3.1 Ambient temperature: -35℃~+70℃

3.2 Altitude: Not exceed 2,000 meters

3.3 Pollution degree: 2

3.4 Relative humidity: ≤95%

TGB1N-MV+MN1 Overvoltage and No-voltage Release for TGB1N-125

1 Overview

TGB1N-MV+MN1 overvoltage and No-voltage release (hereinafter referred to as release) is mainly used in AC 50/60Hz with rated voltage of 230V, and is assembled with the TGB1N series miniature circuit breaker with frame current 125A at the right side for overvoltage and No-voltage protection.

2 Technical Parameters

Modulus	2（18mm）
Working voltage (Overvoltage V AC)	280±5% (Single-phase, three-phase four-wire) 460±5% (three-phase)
Working voltage (No-voltage V AC)	170±5% (Single-phase, three-phase four-wire) 300±5% (three-phase)
Overvoltage and No-voltage life	500 times
Max. wiring area (mm^2)	2.5
Installation	Installed after assembling with circuit breaker

3 Operating Conditions

3.1 Ambient temperature: -35℃~+70℃

3.2 Altitude: Not exceed 2,000 meters

3.3 Pollution degree: 2

3.4 Relative humidity: ≤95%

AFDD Series Arc Fault Detection Device

1 Overview

AFDD-32 series arc fault protection circuit breakers are widely used in household and similar AC circuits with rated voltage of 230V, rated current of 32A and below.

The arc fault protection unit of AFDD-32 series arc fault protection circuit breakers can detect and identify the arc fault, parallel arc extension fault and grounding arc fault in the line. For example, aging and damage of the line insulation layer and moist air are easy to cause arc fault. When AFDD-32 series arc fault protection circuit breakers detect that there is an arc fault in the line, it will automatically trip and cut off the power supply.

2 Type Designation

AFDD – 32 1P+N C 20

- 20 — Rated current (A)
- C — Instantaneous release type (B/C)
- 1P+N — Number of poles (1P+N)
- 32 — Frame rated current (A): 32
- AFDD — Electric arc fault protective device

3 Technical Parameters

3.1 Technical Parameters

Product name	AFDD-32
Electrical characteristics	
Rated voltage (Ue)	AC230V
Rated frequency	50Hz
Rated current (Ie)	6, 10, 16, 20, 25, 32A
Number of poles	1P+N (N pole cannot be open and closed)
Rated insulation voltage (Ui)	400V
Rated impulse withstand voltage (Uimp)	4kV
Rated ultimate short circuit breaking capacity (Icn)	6kA
Rated run short circuit breaking capacity (Ics)	6kA
Instantaneous trip feature	B/C type
Pollution degree	2
Mechanical characteristics	
Mechanical life	10,000 times
Electrical life	6,000 times
Protection grade	IP20
Other characteristics	
Ambient temperature	-5°C~+40°C
Installation altitude	Not exceed 2000m
Wiring terminal	Pressed with screw
Max. wiring capacity	$6mm^2$
Max. ultimate torque	1.5N.m

AFDD Series Arc Fault Detection Device

Installation category	Class III
Installation method	TH35-7.5(1.0) standard rail
Inlet method	Top inlet

3.2 Electric arc fault action requirements

Test arc current (effective value)	3A	6A	13A	20A	40A	63A
Max. breaking time	1S	0.5S	0.25S	0.15S	0.12S	0.12S

The test arc current is the expected current before the combustion in the test circuit

3.3 Overcurrent release protection characteristics

No.	Test current (A)	Start state	Specified time	Expected results	Remarks
B type C type	3In	Cold state	t≤0.1S	Non-trip	Power on the current by turning off the aux. switch
	5In	Cold state	t<0.1S	Trip	
B type	5In	Cold state	t≤0.1S	Non-trip	Power on the current by turning off the aux. switch
	10In	Cold state	t<0.1S	Trip	

Note: “Cold state” refers to no load before test under the reference temperature +30℃

3.4 Protection Characteristics Curve

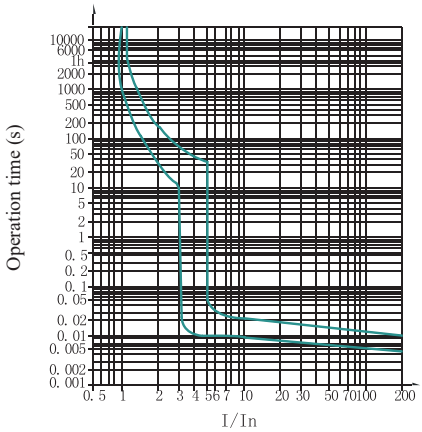

B type protection characteristic curve

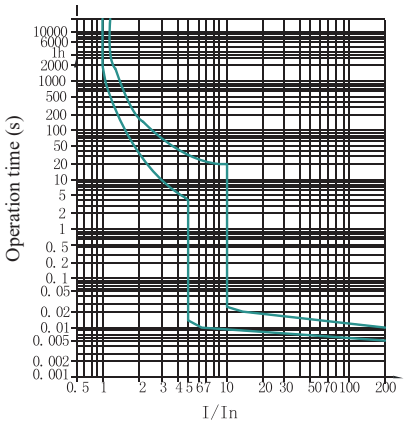

C type protection characteristic curve

3.5 Wiring: Suitable for the connection of 6mm^2 and below wire, the screw tightening torque is 1.5N.m.

Rated current (A)	Nominal sectional area of copper wire (mm^2)
6	1
10	1.5
16~20	2.5
25	4
32	6

AFDD Series Arc Fault Detection Device

4 Outline and Installation Dimensions

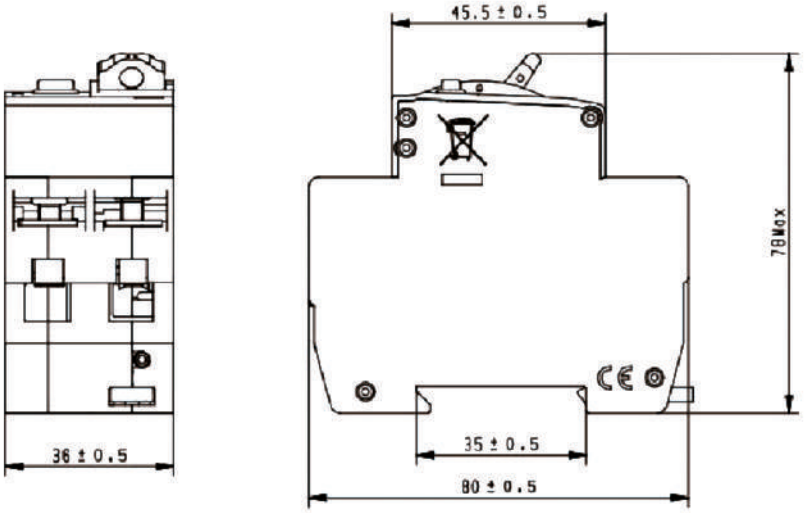

5 Ordering Notice

5.1 Product name and model, such as AFDD-32 electric arc fault protective device;

5.2 Number of poles, such as 1P+N;

5.3 Product instantaneous trip type, such as C type;

5.4 Rated current, such as 20A;

5.5 Product qty., such as 100 units

5.6 Order example, AFDD-32 1P+N C20, 100 units.

TGCH1N Series Modular Contactor

1 Overview

TGCH1N Series Modular Contactors (hereinafter referred to as contactors) are mainly used in AC 50Hz (or 60Hz) power circuit with a rated working voltage up to 400V, rated working current up to 63A under use category AC-7a, and rated working current up to 20A under use category AC-7b to control the household appliances and low-inductance micro-inductance loads with similar purposes, and also can be used to control the household motor loads, and in this case the control power should be reduced accordingly.

The contactor is not used to break short-circuit current, so appropriate short-circuit protective device should be selected during operation.

The products are used in power distribution places such as homes, hotels, apartments, shopping malls and urban lighting systems to realize automatic control functions.

Available Standard: IEC/EN 61095, IEC/EN 60947-4-1

2 Type Designation

2.1 Contactor model and meaning

TG CH 1N - □ □

- Number of main contacts, indicating by two digits: ten digit refers to the number of the normal open main contact pairs and single digit refers to the number of the normal closed main contact pairs (see Table 1)
- Rated working current (A)
- Design code.
- Modular contactor
- Enterprise code

2.2 Accessories model and meaning

TG CH 1N - AS □

- Number of auxiliary contacts, that is 20, 11, and 02
- Side-mounted auxiliary contact group
- Design code.
- Modular contactor
- Enterprise code

TGCH1N Series Modular Contactor

3 Technical Parameters

3.1 Classified according to the number of poles: contactors are divided into 1P, 2P, 3P, 4P.

3.2 The basic parameters of the contactor are listed in Table 1.

Table 1

Parameter			Product model						
			16A	20A	25A	32A	40A	63A	100A
Rated operating current Ie (A)		AC-7a	16	20	25	32	40	63	100
		AC-7b	6	7	9	12	15	20	-
Resistive current Ith (A)			25	25	25	63	63	63	100
Rated impulse withstand voltage Uimp (kV)			4						6
Withstand overload current capacity Icw (A)			8Ie (AC-7b), 10s						
Rated insulation voltage Ui (V)			500						
Rated operating voltage Ue (V)			250B(1P, 2P), 400B(3P, 4P)						
Number of main contacts		1P	10(1NO), 01(1NC)						
		2P	20(2NO), 11(1NO1NC), 02(2NC)						
		3P	30(3NO)						
		4P	40(4NO), 22(2NO2NC), 31(3NO1NC)						
Control power Pe (kW)	AC-7a	230B	3,5	4,5	5,5	7,2	9	14	22
		400B	6,5	10	16	21	26	40	40
	AC-7b	230B	1,4	1,6	2	2,8	3,7	5	-
		400B	2,4	2,8	4	8,5	11	15	-
Wiring screw spec.			M3.5			M5			M7
Tightening torque (N.m)			0,8			3,5			
Connecting wire (mm2)			1,5~4			6~16			6~35
Mechanical life (10,000 times)			600						
Electrical life (10,000 times)			10						5
Rated control power voltage Us (V)			AC(50/60Гц):24, 48, 110, 230						
Rated limit short circuit current Iq (Ka)			3						
Recommended SCPD model			TGB1N-63						TGB1N-125
			1P C16	1P C20	1P C25	1P C32	1P C40	1P C63	1P C100

3.3 The basic parameters of accessory auxiliary contacts are listed in Table 2.

Table 2

Parameter		Auxiliary contact group
		TGCH1N-AS20, 11, 02
Ue/Ie	AC - 12	AC240V/5A
	AC - 15	AC230V/2A
	DC - 13	DC130V/1A
Resistive current Ith(A)		10
Rated impulse withstand voltage Uimp(kV)		4
Rated insulation voltage Ui(V)		500
Mechanical life (10,000 times)		600
Electrical life (10,000 times)		30

3.4 Rated work system:

3.4.1 Eight-hour working system; this working system is the basic working system, and the free air resistive current Ith of contactor is determined by this working system;

3.4.2 Intermittent cycle working system; the rated operating frequency of the contactor under this working system is 30 times/h, and the load factor is 40%.

3.5 Action (operation) conditions

When the ambient air temperature is in the range of -5℃ ~ +40℃ , apply the rated control power voltage Us onto the contactor sucking coil until it heats to a stable state, and the contactor can be reliably closed under any voltage within the range of (85%~110%) Us. Its release voltage is (20%~75%) Us.

4 Operating Conditions

4.1 The ambient air temperature is ranged -5℃ ~ +40℃ , and the average value within 24 hours does not exceed +35℃ .

4.2 Altitude: Not exceed 2,000 meters.

4.3 Atmospheric conditions: The relative humidity of the air at the installation site does not exceed 50% when the maximum temperature is +40℃ ; higher relative humidity is allowed at a lower temperature, for example, up to 90% at +20℃ . Special measures should be taken for occasionally occurred condensation.

4.4 Pollution degree: 2.

4.5 Installation category: Class II.

4.6 Shock and vibration: The installation site shall be free of significant shock and vibration.

4.7 Installation method: 35mm standard rail is used for installation.

4.8 Installation conditions: Vertical installation, the inclination of each direction should not more than ±30°.

4.9 Protection grade: IP20.

5 Product Working Principle

The working principle of the contactor is as follows: when the coil is energized, the coil current generates a magnetic field to produce enough electromagnetic adhesion to overcome the reaction force, attract the armature, and power on the contact. When the coil voltage disappears or the coil voltage drops to a certain value, that is the voltage released, as the magnetic flux generated by the end face of the armature decreases, the electromagnetic adhesion will be smaller than the reaction force generated by the reaction spring and contact spring, and the armature is released under the action of this reaction force and leaves the magnet yoke, so the contact is immediately broken.

6 Features

The contactor is a modular control electrical device featuring with novel and compact structure and small volume. The contact system uses a direct-acting inverted structure.

With rail-mounted installation method used, the contact can be installed in the control lighting box together with a miniature circuit breaker.

The use of high-quality insulating and environmentally friendly materials greatly improves safety.

With artistic and elegant appearance, the anti-slip design of the head grip is ergonomic.

The product has a working status indicator window, with clear actions.

The contact has a large capacity and long service life.

With low power consumption, low noise, and high reliability, suitable for sites such as hotels and hospitals.

TGCH1N Series Modular Contactor

7 Outline and Installation Dimensions

7.1 Outline and installation dimensions for TGCH1N-AS20/11/02, 16/20/25A

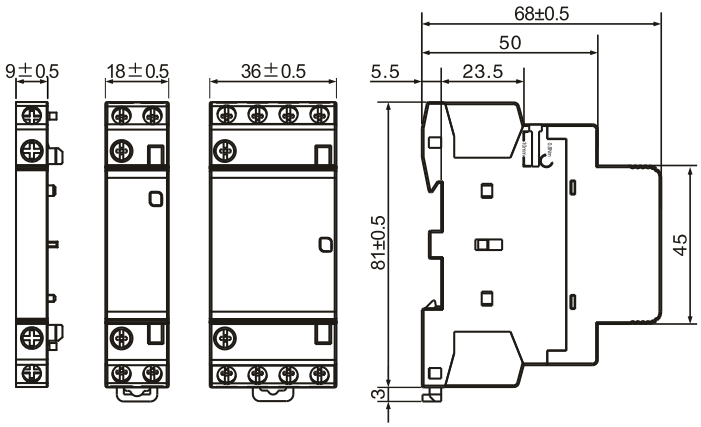

7.2 Outline and installation dimensions for TGCH1N-32/40/63A

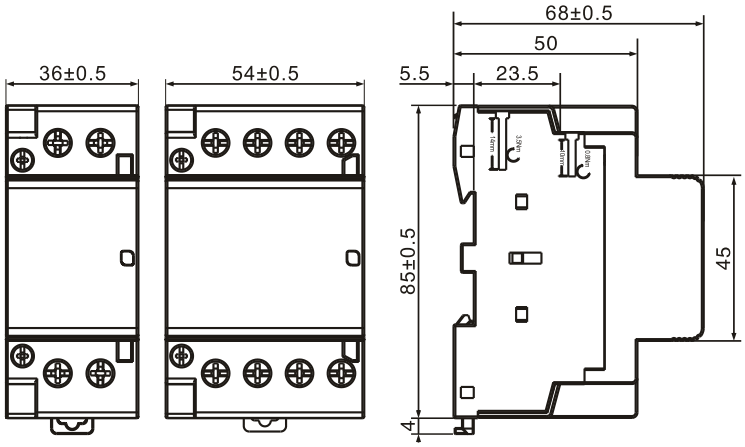

7.3 TGCH1N-100A Outline and installation dimensions

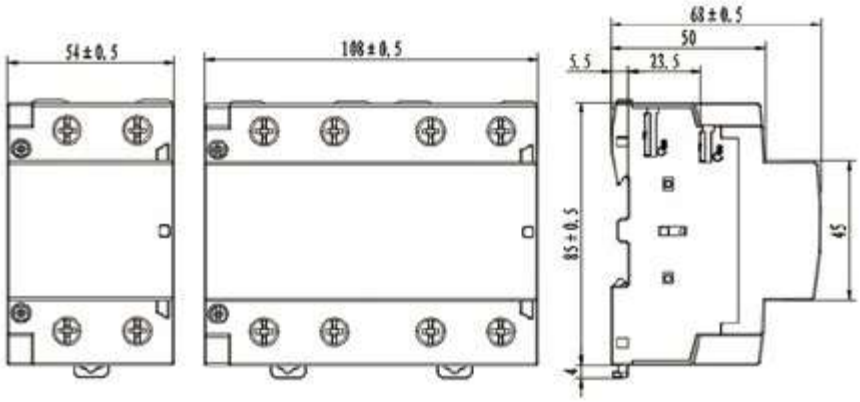

2P 4P

7.4 TGCH1N-AS11 auxiliary contact installation method

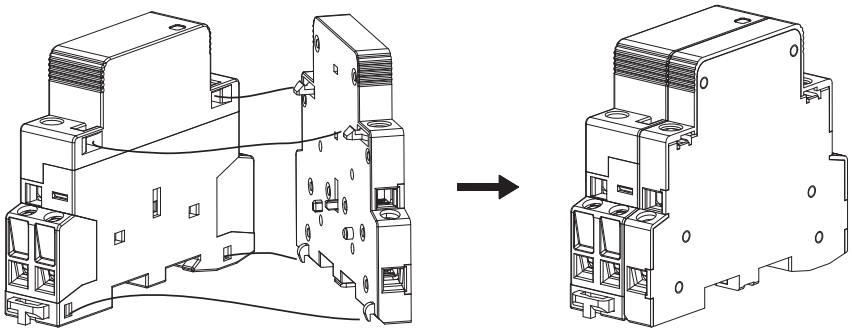

8 Installation, Operation and Maintenance

8.1 Before installation, first check the actual use site satisfies the requirements of the purpose and application scope, technical parameters and normal working conditions and installation conditions of the contactor.

8.2 When installing, pull down the stopper of the contactor, put the contactor on the mounting rail, and then push the stopper upwards to fix the contactor onto the mounting rail without loosening or falling off. To remove the contactor, pull down the stopper for easy removal.

8.3 When wiring the contactor, extend the wire into the wiring hole, and then tighten the wiring screw allowing that the wire cannot be loosened or pulled out. The bare copper wire end cannot be exposed outside the wiring terminal.

8.4 When wiring the contactor, do not squeeze the wiring screws. The screwdriver used for tightening and loosening the screws should be appropriate to avoid to slip the screws by the pneumatic tools.

8.5 After checking that the wiring is correct, power on and off the coil several times when the main contact is not live, and check whether the product action is reliable before putting into operation.

8.6 For tight installation between the contactors and between the contactor and the circuit breaker, spacers (TGCH1N-G) must be installed for convenient heat dissipation (see Fig. 4); when the temperature in the power distribution box exceeds +60℃ , a derating of the contactor is required.

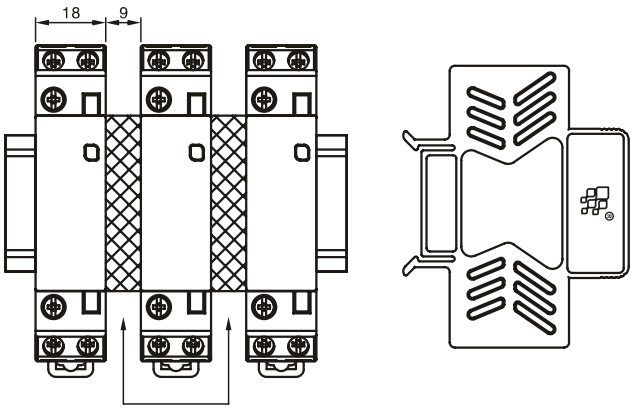

Installation spacing

Spacer TGCH1N-G

8.7 During operation of contactor, please check the wiring screw is tightened firmly regularly, and tighten any loose screw firmly; regularly remove dust from the surface of the housing to maintain good insulation of the housing; if found any large noise or failure of housing insulation during operation, please replace the product timely by a new one. The life shall be calculated according to the product working frequency and working time. When the product working times reaches (or is close to) the service life of the product, please place the product timely by a new one.

TGCH1N Series Modular Contactor

9 Warranty Period

The warranty period of the contactor is 24 months from the date of shipment (refer to product certificate or production batch number). With the storage temperature ranged -30℃ ~ +60℃ , the product should not be affected by rain, snow and direct sunlight. The product storage place should be ventilated and dry, and those must be re-checked if their storage period expires. The relevant quality regulations are available for any quality problem due to improper storage or no inspection when the storage period expires.

10 Ordering Notice

10.1 The following items must be specified when ordering: complete model and name of contactor, coil voltage, and order quantity.

10.2 Order example:

TGCH1N-2520 household AC contactor, coil voltage 230V 50/60Hz 24 sets, TGCH1N-AS11 10 sets.

TGZGQS Series Overvoltage and Undervoltage Protector

1 Overview

TGZGQS self-recovery overvoltage and undervoltage protector (hereinafter referred to as the protector) is suitable for AC voltage 230V single-phase, 50Hz load line with a rated operating current of 80A and below. In case of overvoltage or undervoltage of power supply line, the protector can quickly and safely cut off the circuit under continuous high-voltage impact to avoid the abnormal voltage being transferred to the terminal electric appliance resulting in accidents. When the voltage recovers to the normal value, the protector will power on the circuit automatically within the specified time to ensure the normal operation of the terminal electric appliance during unattended operation. The product shall be connected with the circuit breaker in series, and is mainly used in the incoming splitter box and other power distribution lines to be protected in the civil and commercial buildings.

2 Type Designation

TG ZGQ S – 80 1PN □ □

- Incoming method
  Upper inlet: Upper inlet and lower outlet
  Lower inlet: Lower inlet and upper outlet
- Rated working current
- Number of poles 1PN: 1P+N
- Frame current 80: 80A
- Design code.
- Self-recovery over-voltage and under-voltage protector
- Enterprise code

3 Technical Parameters

3.1 Main technical parameters (see Table 1)

Table 1

Number of poles		1P+N
Rated operating voltage Ue, frequency		230V AC 50Hz
Rated operating current In		20A, 25A, 32A, 40A, 50A, 63A, 80A
Rated insulation voltage Ui		500V
Rated impulse withstand voltage Uimp		4kV
Rated limited short-circuit current capacity Inc		6kA
Undervoltage protection action range		50V ~ 160V
Overvoltage protection action range		275V ~ 440V
Undervoltage trip time		0.6s < t < 5s
Overvoltage trip time (the trip time curve sees Fig. 1)	275V	3s < t < 15s
	300V	1s < t < 3s
	350V	0.25s < t < 0.75s
	400V	0.1s < t < 0.2s
Self-recovery voltage value		195V ~ 253V
Self-reset forced delay		30±5s
Electrical life		≥ 10,000 times
Mechanical life		≥ 100,000 times
Power		≤ 1W

TGZGQS Series Overvoltage and Undervoltage Protector

Work status indicator	Green light	Normally-ON: the voltage is normal, ON
	Green light	Fast flashing: over-voltage fault, OFF
		Slow flashing: undervoltage fault, OFF
Protection grade		IP20
Reference ambient temperature		30℃
Insulation material group		II
Incoming method		Top incoming and bottom outgoing, bottom incoming and to outgoing
Wiring capacity		≤ 25mm^2 ,See Table 2 for details
Tightening torque		2.5N.m
Dimensions (length × width × height) unit: mm		78×27×65.5
weight		Approx. 130g

3.2 Recommended cross-sectional area and rated current of the connecting wire

Table 2

Rated current A	20	25	32	40, 50	63	80
Cross-sectional area of connecting wire mm^2	2.5	4	6	10	16	25

3.3 Electromagnetic compatibility (EMC)

Table 3

Anti-interference test item	Test level
Electrostatic discharge	8kV (air discharge) / 6kV (contact discharge)
Radio frequency radiation	3V/m 80MHz ～ 1,000 MHz
Transient shock	4kV 2.5kHz
Surge	±4kV (common mode)/±2kV (differential mode)
Radio frequency conducted interference	3V 0.15 ～ 80MHz
Voltage sags and interruptions	Class 2
Approx. 130g	Approx. 130g

TGZGQS Series Overvoltage and Undervoltage Protector

3.4 Overvoltage trip time curve

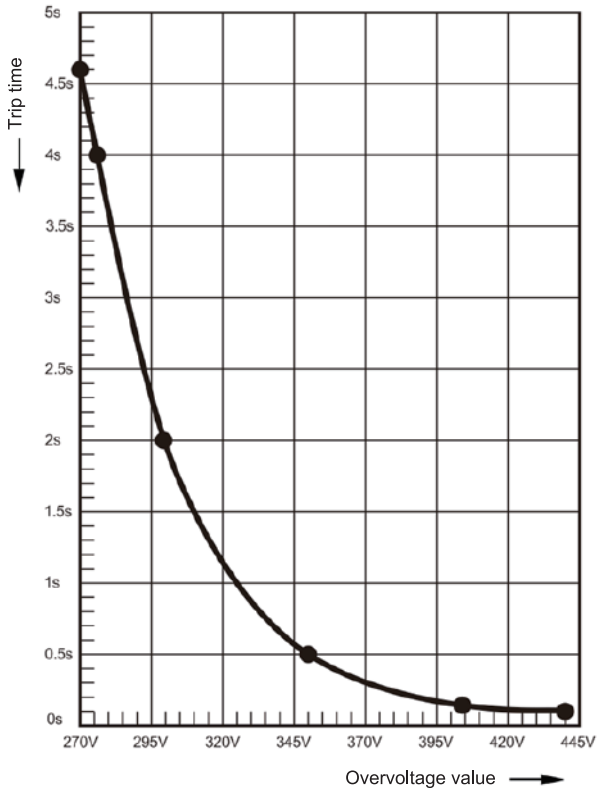

Fig. 1 Overvoltage trip time curve

4 Operating Conditions

Table 4

Installation category	Class Ⅱ，Ⅲ
Pollution degree	2
Working environment temperature (daily average temperature ≤ +35℃)	-25℃ ～ +55℃
Storage temperature	-40℃ ～ +70℃
Allowed working environment	40℃ /50% RH, 20℃ /90% RH
Altitude	≤ 2,000 meters
Installation	Installed on TH35-7.5 guide rail
Installation location	Installed at any position on the guide rail

TGZGQS Series Overvoltage and Undervoltage Protector

5 Outline and Installation Dimensions

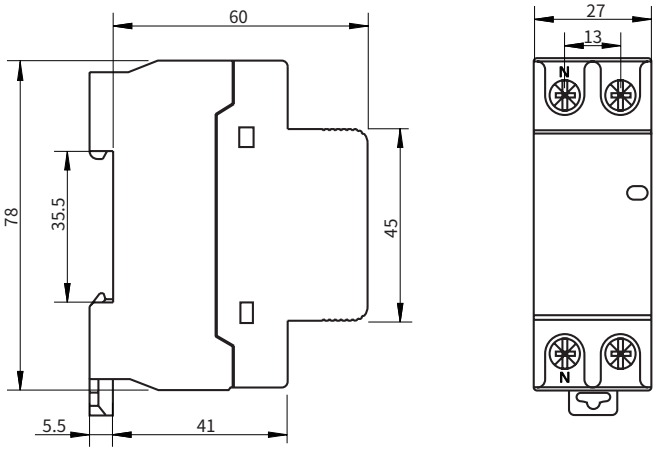

Fig. 2 Outline dimensions (mm)

6 Installation, Commissioning, Inspection and Maintenance

6.1 Before installation, check that the product mark is consistent with the conditions used. The protector has no overload and short-circuit protection functions, and the product only detects the line voltage, and must be used together with a miniature circuit breaker. The rated current of the protector shall be greater than or equal to that of the miniature circuit breaker.

6.2 Correctly connect the wire according to the incoming and outgoing terminals marked on the product, and tighten the fastening torque according to the rated torque to prevent the electrical failure due to poor contact. The wiring diagram sees Fig. 3.

6.3 Do not connect the pole N wrongly, and connect the wire reliably, otherwise the protector cannot work normally.

6.4 The voltage action diagram sees Fig. 4.

6.5 As the product has an automatic reset function, disconnect the load immediately if power outage due to protection for abnormal voltage, and check the circuit, otherwise the product will be turned on and off frequently, and eventually the product or live line will be burnt out due to frequent power-on and power-off under overload for a long time;

6.6 The product has no isolation function, and the superior circuit breaker must be disconnected first for inspection and maintenance.

6.7 Regularly tighten the terminal screws.

Top-in and bottom-out wiring diagram

Bottom-in and top-out wiring diagram

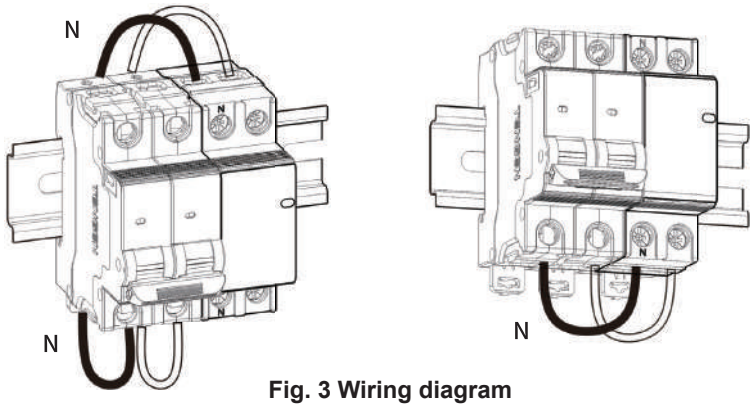

Fig. 3 Wiring diagram

TGZGQS Series Overvoltage and Undervoltage Protector

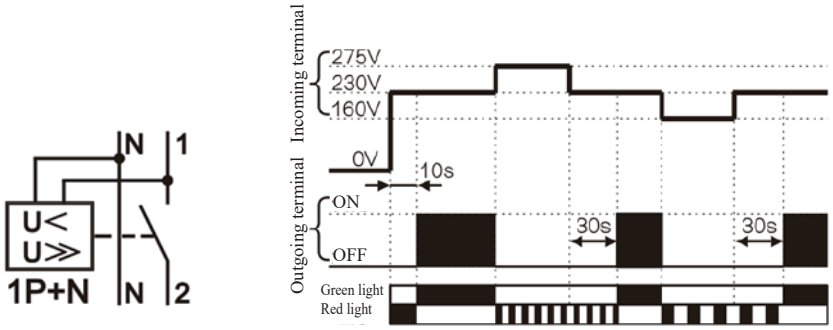

Fig. 6 Voltage action diagram

Note 1: When the protector is powered on for the first time or the system is powered on again after power outage, as there is a 10s delay due to the initialization of the internal software of the product, the red work indicator will be off after lighting up for 10s, and the green is then lit.
Note 2: After power outage, the protector will stop completely after 5s. Therefore, if the protector is powered on forcedly and the incoming terminal voltage is normal, the possible product states are as follows: the red light flashes slowly and enters the undervoltage recovery process, and the circuit will be powered on after a delay of 30s.

7 Fault Analysis and Troubleshooting

Table 5

Failure		Cause	Solution
The incoming terminal is powered but the outgoing terminal is not powered (no output)	The indicator (red light and green light) are not lit on	(1) Incoming and outgoing terminals are connected (2) The wiring is not firmly connected (3) Product failure	(1) Wire correctly according to the label (arrow and text), and tighten the screws. Refer to installation, commissioning, inspection and maintenance 2. (2) Repair or replacement is required if damaged due to violent drop or impact during transportation and installation.
	Repeated turn off and turn on	Repeated abnormal fluctuations of the incoming terminal voltage (overvoltage or undervoltage)	Power on again after elimination of system failure. Refer to Article 6.5.
	Red light flashes quickly for a long time (more than 1 minute)	Continuous over-voltage fault at the incoming line	Power on again after elimination of system failure. Refer to Article 6.5.
	The voltage measured by the multimeter is normal, but the red light flashes quickly	There has been an overvoltage fault	After detecting that the voltage is normal, the switch will be turned on after a delay of 30s. Refer to Article 6.4
	The voltage measured by the multimeter is normal, but the red light flashes slowly	There have been faults such as undervoltage faults, voltage sags for more than 3s, and short-term interruptions.	After detecting that the voltage is normal, the switch will be turned on after a delay of 30s. Refer to Article 6.4
	Green light on	(1) Product failure (2)In case of serious overload and short-circuit fault occurred at the rear end, the end circuit breaker did not trip quickly, resulting in the product contacts are overheated and fusion welded. (3) The service life expires	(1) Repair or replacement is required if damaged due to violent drop or impact during transportation and installation. (2) Disconnect the front-end circuit breaker and the back-end load, and power on; if the fault occurs again, repair and replacement are required.
After power-on, the output terminal gives a voltage output without a 10s delay		The contact of the pole L is closed before power-on	See Note 1

Note 1: The main circuit of the protector uses a power magnetic latching relay. The contact of the pole L of the protector may be closed (open at the normal state) due to abnormal vibration or drop during transportation resulting in no delay when the product is first powered on to supply the power to the load immediately, which is abnormal phenomenon. Suggestion: please disconnect the back-end switch and load of the protector first, and power on the protector under no-load. The protector is powered off again from the normal power-on state, and then powered on again after 5s to resume the state of normal supply after a 10s delay.

TGZGQS Series Overvoltage and Undervoltage Protector

8 Ordering Notice

When ordering, please specify the product model, working current specification, wiring method, and order quantity.
For example: To order 1,000 sets of TGZGQS self-recovery over-voltage protector with rated current 63A, 1P+N, bottom incoming, please specify: TGZGQS-80 1PN 63A, bottom-in and top-out, 1,000 units.

Packaging Information Table 6

Qty.	TGZGQS-80
PCS/box	6
PCS/carton	90

TGZGQ1N Series Overvoltage and Undervoltage Protector

1 Overview

TGZGQ1N self-recovery over-voltage and under-voltage protector (hereinafter referred to as the protector) is suitable for load line with AC voltage single-phase 230V/three-phase 400V, frequency 50Hz, rated operating current 100A and below.

When the circuit voltage is abnormal due to single-phase (three-phase) over-voltage caused by the neutral line fault in the circuit, serious unbalanced three-phase load, too large line resistance, phase loss, the protector can automatically disconnect the load-side power supply, thereby preventing damage to the electrical equipment and realizing the protection of the electrical equipment. Also, the protector can automatically detect the line voltage, and can automatically close when the line has a normal voltage, thereby restoring the power supply to the electrical equipment. The product shall be used in series with a circuit breaker, mainly used in the incoming branch box or other power distribution lines to be protected in the civil and commercial buildings.

2 Type Designation

TG Z GQ 1N - 80 1PN 80 □

- □: Incoming method:
  Upper inlet: Upper inlet and lower outlet
  Lower inlet: Lower inlet and upper outlet
- 80: Rated current:
  20: 20A
  .....
  100: 100A(suitable for 3P+N)
  For specific current specification, refer to Table 1
- 1PN: Number of poles:
  1PN: 1P+N
  3PN: 3P+N
- 80: Frame current:
  80: 80A
  100: 100A
- 1N: Design code
- GQ: Overvoltage and undervoltage protection
- Z: Self-recovery
- TG: Enterprise code

3 Technical Parameters

3.1 Main technical parameters (see Table 1)

Table 1

Product specification	TGZGQ1N-80	TGZGQ1N-100
Electrical characteristics		
Rated current (A)	20/25/32/40/50/63/80A	20/25/32/40/50/63/80/100A
Rated voltage (V)	230V	400V
Number of poles	1P+N	3P+N
Rated impulse withstand voltage Uimp (kV)	4	
Overvoltage action cut-off value (V)	AC 275V>>	
Overvoltage recovery value (V)	AC 240-265V	
Undervoltage action cut-off value (V)	AC 50-160V	
Undervoltage recovery value (V)	AC 185-205V	
Power transmission delay after power failure (s)	30±5s	
Protection action delay time (s)	Overvoltage action characteristics: inverse time ≤ 5s	
	Undervoltage action characteristics: definite time 0.75s	
Power (W)	≤1W	

TGZGQ1N Series Overvoltage and Undervoltage Protector

Mechanical properties		
Electrical life	≥10,000 times	
Mechanical life	≥100,000 times	
Indicator window	Green light is always on -normal Red light flashes quickly-overvoltage Red light flashes slowly-under voltage	Green light is always on -normal Red light flashes quickly-overvoltage Red light flashes slowly-under voltage Red light is always on- phase loss
Normal working conditions and installation characteristics		
Ambient temperature	-25~+55ºC	
Installation altitude	＜2,000 meters	
Installation category	Class Ⅱ, Ⅲ	
Installation method	TH35-7.5 steel mounting rail	
Wiring capacity	See "Reference table for wire cross-sectional area and current"	
Max. limit torque	2.5N.m	3.5N.m
Incoming method	Top in and bottom out, bottom in and top out	
Protection grade	IP20	

3.2 Reference table for wire cross-sectional area and current

Table 2

Rated operating current A	Cross-sectional area of connecting wire, mm²
20	2.5
25	4
32	6
40	10
50	10
63	16
80	25
100	35

3.3 Overvoltage action time curve

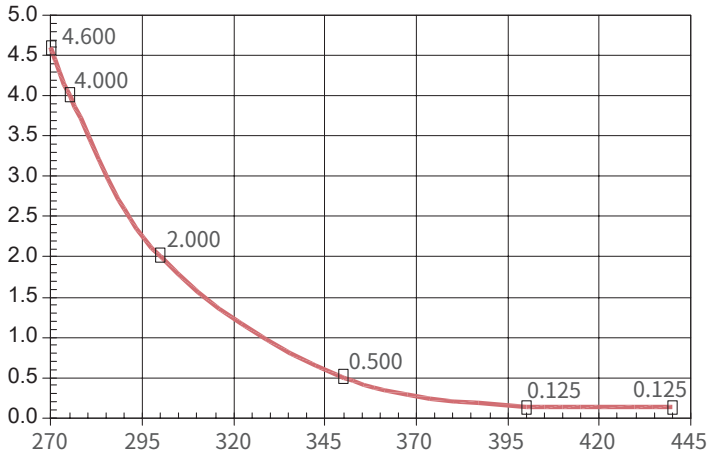

Fig.1 Overvoltage action time curve

TGZGQ1N Series Overvoltage and Undervoltage Protector

4 Installation and Wiring

4.1 Before installation, check that the product identification is consistent with the installation and operation environment.
4.2 Connect the wires according to the specified product incoming and outgoing terminals.
4.3 The line N of the protector is a zero/neutral line, and cannot be connected wrongly; the wire must be connected reliably, otherwise the protector will not work normally.
4.4 When the protector is powered on for the first time, a 1-5s delay is required before supplying normal power to the load. At this time, the protector indicator turns from red to green.

5 Other Precautions

5.1 The single-phase (three-phase) line will be disconnected in case of overvoltage or undervoltage. When recovering to the normal state, the single-phase (three-phase) line will automatically reset after the circuit is powered on without manual operation.
5.2 In case of instantaneous or transient overvoltage of the line, the protector will not act wrongly.
5.3 When the line fault voltage reaches AC440V, the protector itself will not be damaged.
5.4 Protectors (including packaged products) shall not be affected by rain or snow during transportation and storage, and shall be stored in a well-ventilated warehouse with a relative humidity of not more than 90%, with a temperature of not higher than +60ºC and not lower than -25ºC. The product shall be installed in places free of rain and snow intrusion, with good air circulation, with mean monthly relative humidity of no more than 90% (at +20ºC), and with an air temperature of not higher than +40ºC and not lower than -5ºC.
5.5 This protector is only used in an environment with pollution degree 2; the protection grade of the product housing is IP20, and cannot be used in places failed to follow the above requirements.

6 Outline and Installation Dimensions

Unit: mm

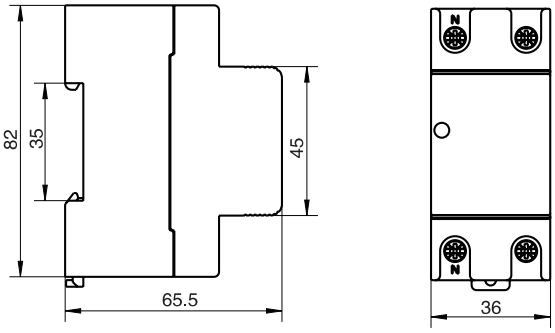

TGZGQ1N-80 Outline and installation dimensions drawing

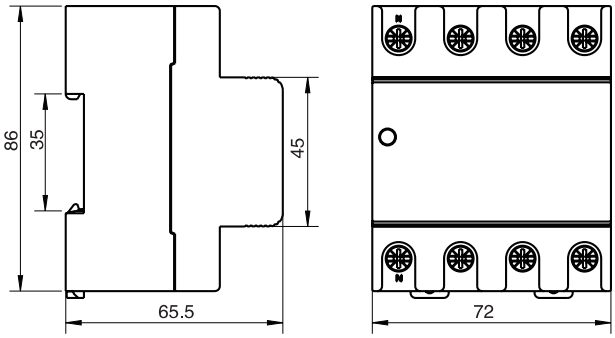

TGZGQ1N-100 Outline and installation dimensions drawing

7 Ordering Notice

Specify the product model and name such as TGZGQ1N-80 self-recovery over-voltage protector, bottom incoming and top outgoing, rated current 63A, 100 units, number of poles 1P+N when ordering
For example, TGZGQ1N-80 63A 1P+N bottom-in and top-out, 100 units.

TGDY55 Series Surge Protective Device

1 Overview

Used in the AC 50/60Hz, 380V and below TT, IT, TN-S, and TN-C-S power supply systems (or communication systems) for surge protection of indirect lightning and direct lightning or other transient overvoltage and overcurrent providing safe and effective electricity safety.

Surge protective device (hereinafter referred to as SPD) has many protection modes such as phase-to-phase, phase-to-earth, phase-to-neutral line, and neutral-to-earth combined protection allowing that the back-end equipment of the low-voltage power distribution system and other equipment can be safely, extensively and effectively protected.

2 Type Designation

TG DY □ □ – □ □ □ □

- F: with communication; No mark: without communication
- Code for the number of poles (1P, 2P, 3P, 4P, 1P+NPE, 3P+NPE)
- Max. continuous operating voltage
- Current / Open-circuit voltage
  A. When the front test classification is I, here indicates impulse current;
  B. When the front test classification is II, here indicates maximum discharge current;
  C. When the front test classification is III, here indicates open-circuit current;
- Test classification (I indicates Grade I test; II indicates Grade II test; II indicates Grade III test)
- Design code.
- Surge protective code
- Enterprise code

3 Technical Parameters

No.	Product model	Max. continuous operating voltage Ue(V)	Voltage protection level Up (kV)	Number of poles
1	TGDY55I-15	385	2.0	1P/2P/3P/4P
2	TGDY55I-25	385	2.3	1P/2P/3P/4P
3	TGDY55II-20	275	1.2	1P/2P/3P/4P
		320	1.5	1P/2P/3P/4P 1P+N/3P+N
		385	1.5	
		460	1.8	1P/2P/3P/4P
4	TGDY55II-40	275	1.5	1P/2P/3P/4P
		320	1.6	1P/2P/3P/4P 1P+N/3P+N
		385	1.8	
		460	2.0	1P/2P/3P/4P
5	TGDY55II-65	385	2.0	1P/2P/3P/4P/1P+N/3P+N
		460	2.2	1P/2P/3P/4P
6	TGDY55II-80	385	2.5	1P/2P/3P/4P/1P+N/3P+N
		460	2.2	1P/2P/3P/4P
7	TGDY55II-100	385	2.5	1P/2P/3P/4P/1P+N/3P+N
		460	2.2	1P/2P/3P/4P
8	TGDY55II-120	385	2.5	1P/2P/3P/4P/1P+N/3P+N
		440	2.5	1P/2P/3P/4P
9	TGDY55II-160	385	3.0	1P/2P/3P/4P

TGDY55 Series Surge Protective Device

Product model	TGDY55II-160	TGDY55II-120	TGDY55II-100	TGDY55II-80	TGDY55II-65
Standard	IEC 61643.1				
Electrical characteristics					
Rated frequency (Hz)	50-60				
Grid operating voltage Un (V)	220/380				
Max. discharge current Imax (kA)	160	120	100	80	65
Nominal discharge current In (kA)	80	60	50	40	30
Response time Ta (ns)	25				
L/N recommended connecting wire diameter (mm^2)	25, 35	16, 25	16, 25	16, 25	16, 25
PE recommended connecting wire diameter (mm^2)	35	25, 35	25, 35	25, 35	25, 35
Maximum allowable fuse for backup protection (A)	200	200	160	160	160
Backup protection (recommended circuit breaker, A)	63/100/125	63/100/125	63/100/125	63/100	63/100
Protection grade (product use protection type)	B/I level protection				
Test level (product performance test waveform)	Class C/T2/II test (8/20us)				
Normal working conditions and installation features					
Ambient temperature	Normal range: -5℃～+40℃ ; limit range: -40℃～+70℃				
Failure indicator window	Yes (green: normal; red: fault)				
Remote signaling contact	Optional (no remote signaling contact function for conventional products)				
Installation altitude	≤2,000 meters				
Terminals	Screw tightening torque N.m:2.5(max)				
Maximum wiring capacity	Flexible wire 2.5 ～ 16mm^2/ Hard wire 2.5 ～ 25mm^2				
Installation method	TH35-7.5 steel mounting rail				
Protection grade	IP20				

Product Model	TGDY55II-40	TGDY55II-20	TGDY55I-25	TGDY55I-15
Standard	IEC 61643.1			
Electrical characteristics				
Rated frequency (Hz)	50-60			
Grid operating voltage Un (V)	220/380			
Max. discharge current Imax (kA)	40	20	Iimp25	Iimp15
Nominal discharge current In (kA)	20	10	30	20
Response time Ta (ns)	25			
L/N recommended connecting wire diameter (mm^2)	10, 16	10, 16	25	16
PE recommended connecting wire diameter (mm^2)	25	25	35	25
Max. allowable fuse for backup protection (A)	100	50	160	100
Backup protection (recommended circuit breaker, A)	32/63	16/32	63/125	32/63
Protection grade (product use protection type)	C/II level protection	D/III level protection	B/I level protection	
Test level (product performance test waveform)	Class C/T2/II test (8/20us)		Class B/T1/I test (10/350us)	
Normal working conditions and installation characteristics				
Ambient temperature	Normal range: -5℃～+40℃ ; limit range: -40℃～+70℃			
Failure indicator window	Yes (green: normal; red: fault)			
Remote signaling contact	Optional (no remote signaling contact function for conventional products)			
Installation altitude	≤2,000 meters			
Terminals	Screw tightening torque N.m:2.5(max)			
Max. wiring capacity	Flexible wire 2.5 ～ 16mm^2/ Hard wire 2.5 ～ 25mm^2			
Installation method	TH35-7.5 steel mounting rail			
Protection grade	IP20			

TGDY55 Series Surge Protective Device

4 Outline and Installation Dimensions

4.1 TGDY55II-20/40 outline installation dimension drawing:

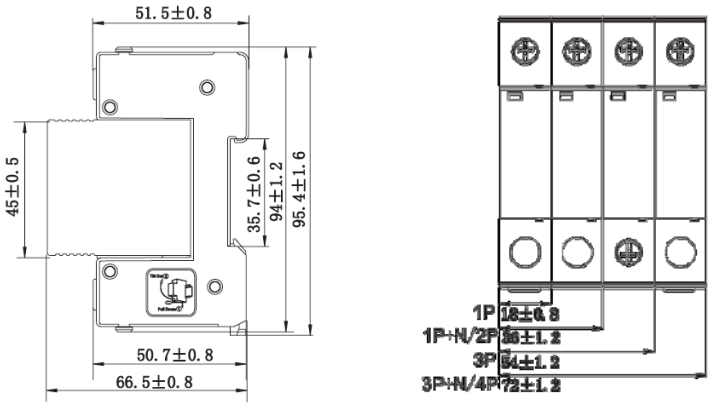

4.2 TGDY55I(II)-15(65/80) outline installation dimension drawing:

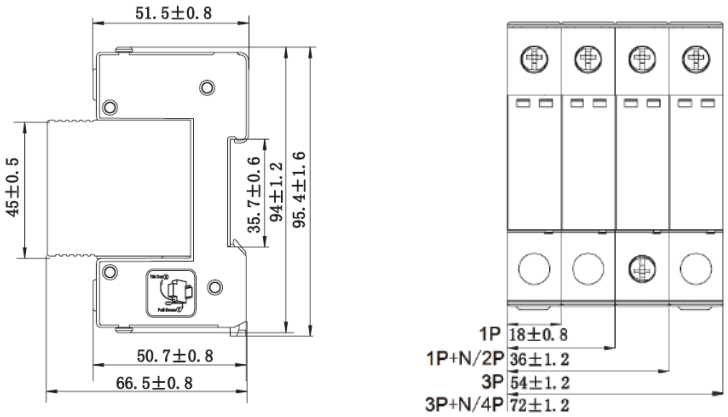

4.3 TGDY55II-100 outline installation dimension drawing:

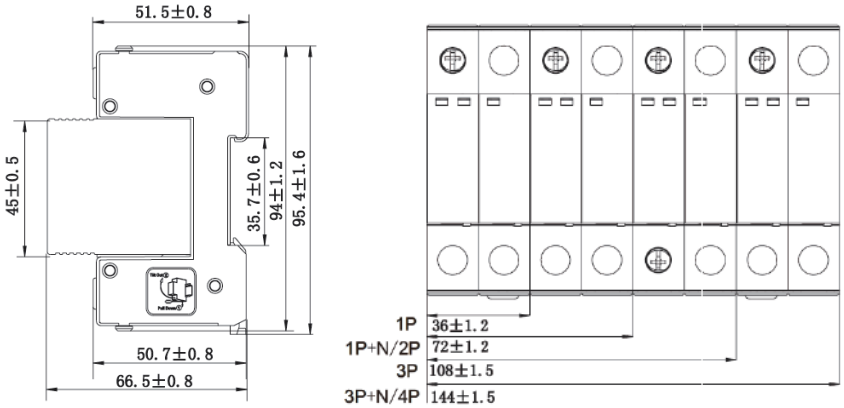

TGDY55 Series Surge Protective Device

4.4 TGDY55I(II)-25(120/160) outline installation dimension drawing:

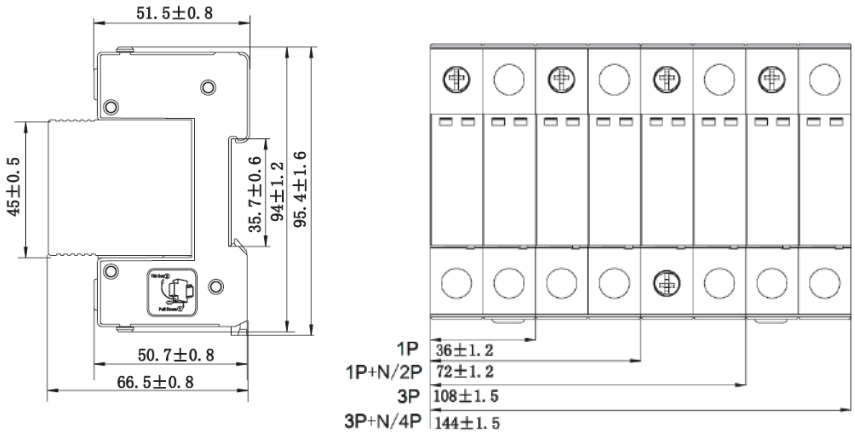

5 Ordering Notice

5.1 When ordering, please specify SPD model, nominal discharge current, max. continuous working voltage, voltage protection grade, the number of poles, and quantity listed in the product parameters table.

5.2 The SPD module can be replaced or ordered. When ordering, please specify the model, nominal discharge current (In), maximum continuous working voltage (Uc), and voltage protection grade (Up) of the protective model.

5.3 Order example: TGDY55II-20 385V 4P, 200 pcs.

TGU3 Series Surge Protective Device

1 Overview

TGU3 Series Surge Protective Device (hereinafter referred to as SPD) has various protection modes such as phase-to-phase, phase-to-earth, phase-to-neutral, neutral-to-earth, and their combinations; it is suitable for AC 50/60Hz TT, IT, TN-S, and TN-C-S power supply system (or communication system) with voltage 380V and below for protection of indirect thunder and lightning, direct thunder and lighting or other instantaneous overvoltage and overcurrent surge for more effective electricity safety.

2 Product Naming Rules

TG U □ - □ □ □ □

- Telesignalling contact: F-NO/NC remote telesignalling contact; Non-represents without remote telesignalling contact
- Number of poles: 1P, 2P, 3P, 4P, 1P+NPE, 3P+NPE
- Discharge current: Max. discharge current Imax (kA)
- Test classification: B- Class I test, C- Class II test, D- Class III test
- Design code
- Surge protective device
- Enterprise code

3 Technical Parameters

Product model	TGU3-C160	TGU3-C120	TGU3-C100	TGU3-C80	TGU3-C60	TGU3-C40	TGU3-C20	TGU3-B25	TGU3-B15
Standard	IEC 61643.1								
Electrical specification									
Number of poles	1P, 2P, 3P, 4P		1P, 1P+N, 2P, 3P, 3P+N, 4P					1P, 2P, 3P, 4P	
Rated frequency (Hz)	50-60								
Grid operational voltage Un (V)	220/380								
Max. Continuous operating current Uc (V)	385							385	
Voltage protection grade Up (kV)	≤3.5	≤3.0	≤2.5	≤2.3	≤2.0	≤1.8	≤1.5	≤2.2	≤1.8
Max. Discharge current Imax (kA)	160	120	100	80	60	40	20	Iimp25	Iimp15
Nominal discharge current In (kA)	100	70	60	40	30	20	10	30	20
Response time Ta (ns)	100	100	25	25	25	25	25	100	100
L/N recommended diameter of connecting wire (mm)	25,35	16,25	16,25	16,25	16,25	10,16	10,16	25	16
PE recommended diameter of connecting wire (mm)	35	25,35	25,35	25,35	25,35	25	25	35	25
Matched fuse or circuit breaker(A)	63,125	63,100	63,100	32,63	32,63	25,32	16,25	63,125	32,63
Protection grade	B	B	B	B	B	C	D	B	B
Test grade	Class II test (8/20 μs)							Class I (10/350μs)	
Normal working conditions and installation features									
Ambinet temperature	Normal range -5℃~+40℃, Limit range -40℃~+70℃								
Installation altitude	Not exceed 2,000 meters								
Wiring terminal	Crimped with screws								
Max. wiring capacity	Soft wire 2.5~16mm^2, Hard wire 2.5~25mm^2								
Installation method	TH35-7.5 steel mounting rail								
Remarks:	1. Common modes: 1P, 2P, 3P, 4P; TGU3-C (20-100) contains common products 1P+NPE and 3P+NPE; 2. 1P and 3P are suitable for power supply grounding system such as TN-C and IT; 3. 2P and 4P (1P+N, 3P+N) are suitable for power supply systems such as TT, TN-S, and IT; 4. Telesignalling contact: No telesignalling contact function is provided for common products; Telesignalling contact function can be available if required (except for TGU3-B model).								

TGU3 Series Surge Protective Device

4 Outline and Installation Dimensions

4.1 Outline and installation dimension drawings of TGU3-C (10-60) are shown in Fig. 1:

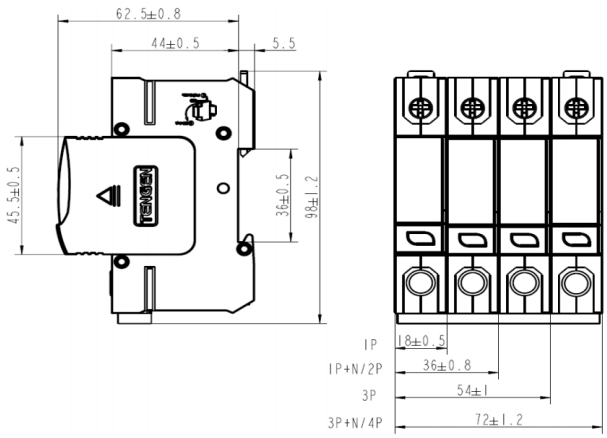

4.2 Outline and installation dimension drawings of TGU3-C (80-160) and TGU3-B (15-25) are shown in Fig. 2

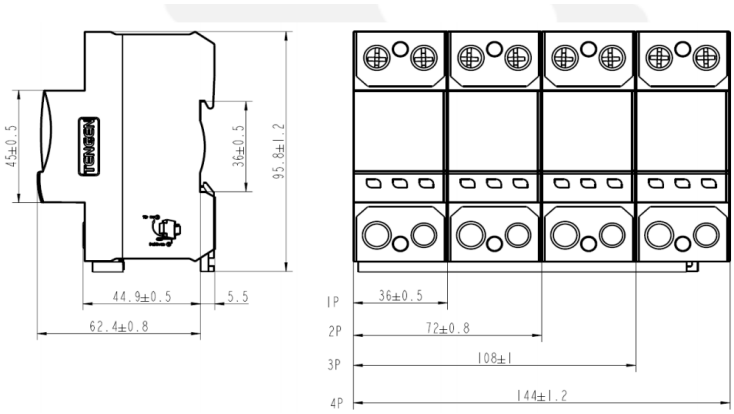

TGU3 Series Surge Protective Device

5 Ordering Notice

5.1 Please refer to the Table 1 for technical parameters for model selection when ordering.

5.2 Please specify when ordering:

5.2.1 SPD name and type: such as TGU3;

5.2.2 Nominal discharge current and max. discharge current or max. impulse current of SPD: such as In 10KA/Imax 20KA or In 25KA/imp 25KA;

5.2.3 Max. continuous operating current of SPD (Uc): such as Uc 385V;

5.2.4 Voltage protection grade and number of poles: Such as Up 1.5KV 1P;

5.2.5 Telesignalling function provided or not (no telesignalling function available for common products) and order quantity, such as with telesignalling function, 100 pcs;

5.3 Order example: such as surge protective device TGU3-C20 10KA/20KA 385V 1P (with telesignalling function) UP1.5KV, 100 pcs;

5.4 Our company can design and manufacture various special matching surge protective devices and lighting power distribution box for different industries.

JXF Series Power Distribution Box

1 Technical Parameters

JXF Series Power Distribution Box product is box assembled with various control functions by customer-selected components, and there are many box sizes and specifications and the size of the box can be customized according to the size of the installation elements. It is used in the AC 50Hz power, lighting and circuit systems with the voltage of 500V and below for power distribution control, monitoring and metering protection, mainly suitable for many places such as industrial and civil buildings, industrial and mining enterprises, high-rise buildings, stations, hospitals, schools, institutions, and residences. The product uses zinc alloy AB lock, 180° free opening door, and foam sealing strip, and has the advantages of reasonable structural design, safe circuit configuration, and good protection properties.

2 Type Designation

JXF - □ □ / □ □

- Thickness of the box material
- Box depth
- Box width
- Box height
- Power distribution box

3 Technical Parameters

Max. operating voltage	220/380V AC
Max. rated operating current	400A
Protection grade	IP42

4 Model & Spec.

Model & Spec.	Outline dimensions	Material thickness	Hinge (Zinc alloy)
	L*W*D	Body*Surface*Bottom	
JXF-3025/14 0.8mm	300*250*140	0.8*1.0*0.8	2 pcs/unit (iron)
JXF-4030/14 1.0mm	400*300*140	1.0*1.0*1.0	2 pcs/unit
JXF-4030/20 1.0mm	400*300*200	1.0*1.0*1.0	2 pcs/unit
JXF-4030/25 1.0mm	400*300*250	1.0*1.0*1.0	2 pcs/unit
JXF-5040/14 1.0mm	500*400*140	1.0*1.0*1.0	2 pcs/unit
JXF-5040/20 1.0mm	500*400*200	1.0*1.0*1.0	2 pcs/unit
JXF-5040/25 1.0mm	500*400*250	1.0*1.0*1.0	2 pcs/unit
JXF-6040/20 1.0mm	600*400*200	1.0*1.0*1.0	2 pcs/unit
JXF-6050/14 1.0mm	600*500*140	1.0*1.2*1.0	2 pcs/unit
JXF-6050/20 1.0mm	600*500*200	1.0*1.2*1.0	2 pcs/unit
JXF-6050/25 1.0mm	600*500*250	1.0*1.2*1.0	2 pcs/unit
JXF-7050/20 1.2mm	700*500*200	1.2*1.2*1.2	2 pcs/unit
JXF-7050/25 1.2mm	700*500*250	1.2*1.2*1.2	2 pcs/unit
JXF-8060/20 1.2mm	800*600*200	1.2*1.5*1.2	3 pcs/unit

JXF Series Power Distribution Box

Model & Spec.	Outline dimensions	Material thickness	Hinge (Zinc alloy)
	L*W*D	Body*Surface*Bottom	
JXF-8060/25 1.2mm	800*600*250	1.2*1.5*1.2	3 pcs/unit
JXF-9070/20 1.2mm	900*700*200	1.2*1.5*1.2	3 pcs/unit
JXF-10060/20 1.2mm	1000*600*200	1.2*1.5*1.2	3 pcs/unit
JXF-10080/20 1.2mm	1000*800*200	1.2*1.5*1.2	3 pcs/unit
JXF-10080/25 1.2mm	1000*800*250	1.2*1.5*1.2	3 pcs/unit
JXF-12080/20 1.2mm	1200*800*200	1.2*1.5*1.5	3 pcs/unit

Note: Customized according to the user requirements.

5 Ordering Notice

5.1 Please specify the product model, box size, box material thickness and quantity when ordering.

5.2 Ordering example: JXF box size 600*500*200, thickness 1.0mm, 100 units.

Please specify: JXF-6050/20 1.0mm 100 units.

ACM Series Metal Distribution Box

1 Overview

With full-metal shell, ACM series distribution box is used to accommodate neutral terminal block, earthing terminal block and DIN rail, and can work together with Tengen module distribution protection products. The shell surface is subject to RAL7035 light gray-white epoxy resin electrostatic spraying treatment. With flush-cover design and concealed door cover screws, the product looks elegant and generous in different installation environments. There are wall-mounted installation (surface mounted box) and wall-embedded (concealed box) installations provided.

2 Type Designation

ACM - □ □

- Installation method:
  R:flush mounted
  M:surface mounted
- Number of circuits
- Design code

3 Technical Parameters

Product model	ACM metal distribution box
Rated insulation voltage Ui	Voltage AC400V
Rated operational voltage Ue	AC230V/400V
Line Rated Current	100A
Power frequency withstand voltage	2500V/1min
Protection grade	IP30
Earth resistance	≤0.05Ω

4 Operating Conditions

4.1 Ambient temperature: -5℃~+40℃; the mean value within 24h does not exceed +35℃.

4.2 Altitude: The altitude at the installation site does not exceed 2,000 meters.

4.3 Atmospheric conditions: The relative air humidity at the maximum ambient temperature +40℃ does not exceed 50% at the installation site, and the maximum relative humidity at the monthly mean minimum temperature +25℃ of the wettest month is 90%.

4.4 Pollution degree: 2.

4.5 Installation category: Class III.

ACM Series Metal Distribution Box

5 Outline and Installation Dimensions

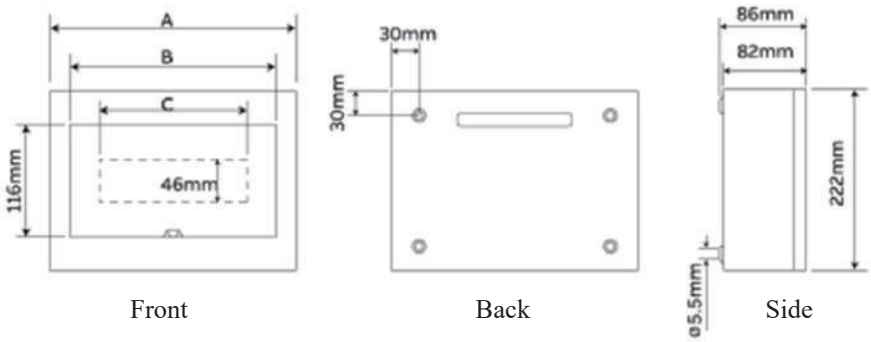

Dimension drawings of surface mounted distribution box

Model	A	B	C
ACM-08M	213	177	141
ACM-10M	248	212	176
ACM-13M	300	265	229
ACM-16M	352	317	282
ACM-20M	423	387	352
ACM-23M	475	440	405

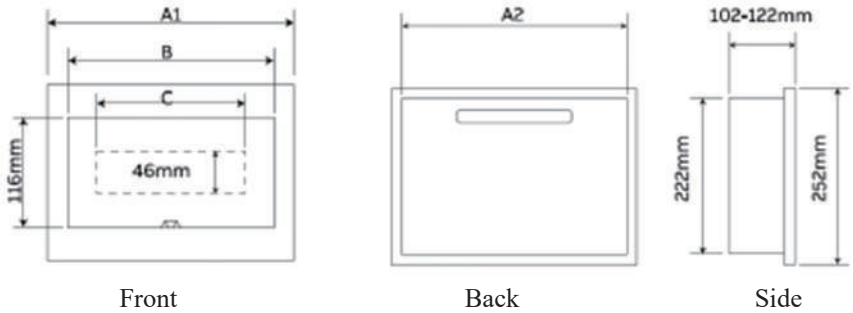

Dimension drawings of surface mounted distribution box

Model	A1	A2	B	C
ACM-08R	243	213	177	141
ACM-10R	278	248	212	176
ACM-13R	330	300	265	229
ACM-16R	383	352	317	282
ACM-20R	453	423	387	352
ACM-23R	505	475	440	405

Note: The product with other specification and dimensions can be customized through negotiation with the manufacturer.

6 Ordering Notice

Please specify the product model and quantity when ordering.

Example: To order one hundred ACM open-mounted 8-circuit power distribution box,
please specify ACM-08M, 100 pcs .

AXM Series Plastic Distribution Box

1 Overview

With full-plastic shell, AXM series distribution box is used to accommodate neutral terminal block, earthing terminal block and DIN rail, and can work together with Tengen module distribution protection products. The shell surface is made of ABS engineering plastic. With semi-transparent sight glass, the product looks elegant and generous in different installation environments. There are wall-mounted installation (surface mounted box) and wall-embedded (concealed box) installations provided.

2 Type Designation

AXM - □ □

- Installation method:
  R:flush mounted
  M:surface mounted
- Number of circuits
- Design code

3 Technical Parameters

Product model	AXM plastic distribution box
Rated insulation voltage Ui	Voltage AC400V
Rated operational voltage Ue	AC230V/400V
Line Rated Current	100A
Power frequency withstand voltage	2500V/1min
Protection grade	IP30
Earth resistance	≤0.05Ω

4 Operating Conditions

4.1 Ambient temperature: -5℃~+40℃; the mean value within 24h does not exceed +35℃.

4.2 Altitude: The altitude at the installation site does not exceed 2,000 meters.

4.3 Atmospheric conditions: The relative air humidity at the maximum ambient temperature +40℃ does not exceed 50% at the installation site, and the maximum relative humidity at the monthly mean minimum temperature +25℃ of the wettest month is 90%.

4.4 Pollution degree: 2.

4.5 Installation category: Class III.

AXM Series Plastic Distribution Box

5 Outline and Installation Dimensions

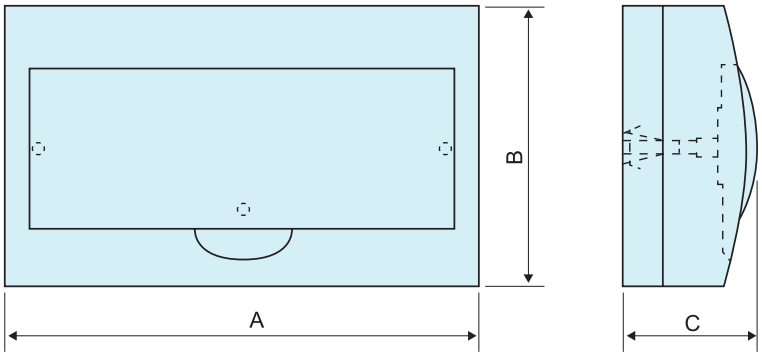

Dimension drawings of surface mounted box

Model	A	B	C
AXM-06M	147	199	93
AXM-08M	184	199	97
AXM-12M	256	199	97
AXM-18M	361	220	98
AXM-24M	270	325	100
AXM-36M	270	459	100

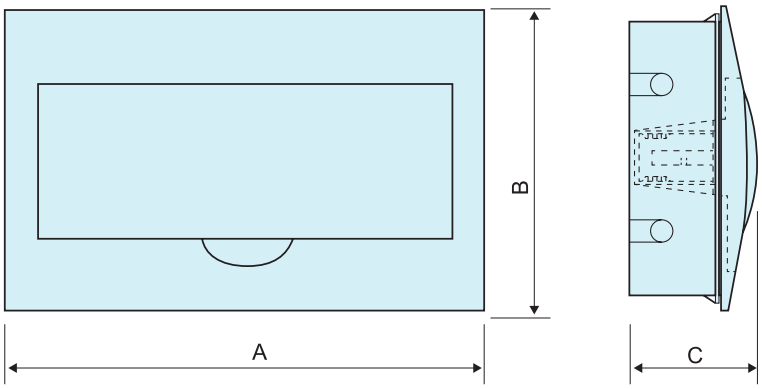

Dimension drawings of concealed box

Model	A	B	C
AXM-06R	171	221	87
AXM-08R	206	221	87
AXM-12R	280	199	97
AXM-18R	400	253	98
AXM-24R	300	344	98
AXM-36R	300	481	98

Note: The product with other specification and dimensions can be customized through negotiation with the manufacturer.

AXM Series Plastic Distribution Box

6 Ordering Notice

Please specify the product model and quantity when ordering.

Example: To order one hundred AXM open-mounted 8-circuit distribution box,
please specify AXM-08M, 100 pcs.

C

CONTROL DEVICES

C001-C195

CONTROL DEVICES

Contactors

Relays

Motor Drive Apparatus

Transformers and Voltage Regulators

Buttons, Indicators and Switches

Contactors

New
TGC1s Series AC Contactor
Page 001

TGC1 Series AC Contactor
Page 007

TGC1 (120 ~ 630A) Series AC Contactor
Page 018

New
TGCA-06M-12M Mini AC Contactor
Page 025

New
TGCA (120 ~ 630A) Series AC Contactor
Page 029

New
TGC3 Series AC Contactor
Page 036

TGC1-N Series Reversing Contactor
Page 048

TGCC1 Series Capacitor Switching Contactors
Page 052

New
CJX2(F)-C Series AC Contactor (AC-1)
Page 057

Relays

TGR1 Series Thermal Overload Relay
Page 063

JR28 Series Thermal Overload Relay
Page 070

TGJ1 Series Contactor Relay
Page 077

TGJS1 Series Time Relay
Page 080

JS14-A Series Time Relay
Page 082

JS14-S Series Time Relay
Page 084

TGJC1 Series Mini Electromagnetic Relay
Page 086

New
TGCR1 Series Control Relay
Page 095

Motor Drive Apparatus

TVFE9 Series Inverter

Page 103

TGS51 Series Enclosed Direct-on-line (DOL) Starter

Page 120

New

TVF300 Series High-Performance Vector Inverter

Page 110

New

TGK1 Series Control and Protection Switchgear

Page 123

TGS3 Series Soft Starter

Page 118

TGD1 AC Motor Circuit Breaker

Page 133

Transformers and Voltage Regulators

TGBK1 Series Control Transformer

Page 141

SBK,SG Series Three-phase Transformer

Page 147

BK(Copper) Series Control Transformer

Page 144

$T^{D}_{S}GC_2$ $T^{D}_{S}GC_2J$ Series Voltage Regulator

Page 151

Buttons, Indicators and Switches

TGLA1 Series Button Switch

Page 154

LW28 Series CAM Switch

Page 179

LAY5 Series Button Switch

Page 160

LXW5 Series Limit Switch

Page 183

TGAD1 Series Indicator

Page 167

ME Series Limit Switch

Page 190

New

TGHX3 Series Switch Disconnector

Page 171

TGC1s Series AC Contactor

1 Overview

TGC1s(09-95A) series AC contactor is mainly used in the AC 50Hz (or 60Hz) power system with the rated operating voltage up to 660V and with the rated operating current up to 95A at the rated operating voltage 380V under the AC-3 use category for remotely powering on and powering off the circuit, suitable for frequent startup and control of AC motor.

2 Type Designation

TGC1s – 09 10 N B 7

- 7: Working frequency: Default: 50Hz
- B: Coil voltage AC: B:24V C:36V E:48V F:110V M:220V Q:380V V:400V N:415V
- N: Function code
  - N: Reversible contactor
  - Default: Conventional three-pole contactor
- 10: Aux. contact: 10:1 normally open 01:1 normally closed
- 09: Rated current: 09/12/18/25/32/38/40/50/65/80/95
- TGC1s: AC contactor

3 Main Technical Parameters

Rated operating current Ie	9A ～ 95A
Rated operating voltage Ue	220V/230V、380V/400V、660V/690V
Rated insulation voltage	690V
Number of poles	Three poles
Coil control method	AC
Installation method	35mm rail-mounted, screw mounted
Standard	IEC 60947-4-1

TGC1s Series AC Contactor

4 Working and installation conditions

Installation category	III
Pollution level	3
Housing protection grade	IP20
Ambient air temperature	Ambient temperature (around the equipment): allowable working temperature -35℃ ~ +70℃, normal working temperature -5℃ ~+40℃； When the ambient temperature is higher than +40℃, it is considered that the permissible limit temperature rise of the product will be reduced, the rated operating current (derating coefficient sees table below) must be reduced, and the number of contactors installed in the standard component shall be deceased, otherwise the product may be damaged, the service life may be shortened, the operation reliability may be reduced, and the product operation range may be affect; when the ambient temperature is below -5℃, condensation of the grease used in the insulation and lubrication may occur in the too low ambient temperature, thereby resulting in product action failure. therefore, please users are required to contact the manufacturer before design or use.
Altitude	≤2000m
Atmospheric conditions	The relative humidity of the air does not exceed 50% at a maximum temperature of +70°C, and higher relative humidity is allowed at lower temperatures, such as up to 90% at 20°C. Measures are taken for condensation occurred occasionally due to temperature changes.
Installation conditions	The inclination between the mounting surface and the vertical surface is not greater than ±22.5°
Impact and vibration	Products should be installed and used in places where there is no severe shaking, impact and vibration.

Temperature derating coefficient table:

Ambient temperature ℃	40	50	55	60	65	70
Correction coefficient	1	0.98	0.95	0.93	0.875	0.75

5 Main Performance Indicators

Model			TGC1s -09	TGC1s -12	TGC1s -18	TGC1s -25	TGC1s -32	TGC1s -38	TGC1s -40	TGC1s -50	TGC1s -65	TGC1s -80	TGC1s -95
Rated operating current (A)	220V/230V	AC-3	9	12	18	25	32	38	40	50	65	80	95
		AC-4	3.5	5	7.7	8.5	12	14	18.5	24	28	37	44
	380V/400V	AC-3	9	12	18	25	32	38	40	50	65	80	95
		AC-4	3.5	5	7.7	8.5	12	14	18.5	24	28	37	44
	660V/690V	AC-3	6.6	8.9	12	18	22	22	34	39	42	49	49
		AC-4	1.5	2	3.8	4.4	7.5	8.9	9	12	14	17.3	21.3
Resistive current of free air (A)			20	20	25	32	40	50	50	60	80	110	110
Rated insulation voltage (V)			690										
Rated impulse withstand voltage (kV)			6									8	
Controllable three-phase squirrel cage motor power (AC-3) kW	220V/230V		2.2	3	4	5.5	7.5	9	11	15	18.5	22	25
	380V/400V		4	5.5	7.5	11	15	18.5	18.5	22	30	37	45
	660V/690V		5.5	7.5	10	15	18.5	18.5	30	33	37	45	45

TGC1s Series AC Contactor

Table, continued

Model			TGC1s -09		TGC1s -12		TGC1s -18		TGC1s -25		TGC1s -32		TGC1s -38		TGC1s -40		TGC1s -50		TGC1s -65		TGC1s -80		TGC1s -95	
Motor power under intermittent periodic duty-type		220V/230V	0.6		1.1		1.5		2.2		3		4		5.5		6		7.5		11		14	
		380V/400V	1.5		2.2		3.3		4		5.4		5.5		7.5		11		15		18.5		22	
		660V/690V	1.1		1.5		3		3.7		5.5		6		7.5		10		11		15		18.5	
Operation frequency (times / h)	Electrical life	AC-3	1200								600													
		AC-4	300																		120			
Electrical life (10,000 times)		AC-3	60								50				100						80			
		AC-4	10												20						13			
Mechanical life (10,000 times)			800						500						900						650			
Model of matched fuse			RT16-00 20		RT16-00 20		RT16-00 25		RT16-00 40		RT16-00 50		RT16-00 63		RT16-00 63		RT16-00 63		RT16-00 80		RT16-00 100		RT16-00 125	
old-pressed terminal	Qty.		1	2	1	2	1	2	1	2	1	2	1	2	1	2	1	2	1	2	1	2	1	2
	Non-prefabricated terminal flexible wire	mm^2	1/4	1/4	1/4	1/4	1/4	1/4	1.5/6	1.5/6	1.5/6	1.5/6	1.5/6	1.5/6	2.5/2.5	1.5/16	2.5/2.5	1.5/16	2.5/2.5	1.5/16	4/50	4/25	4/50	4/50
	Prefabricated terminal flexible wire		1/4	1/2.5	1/4	1/2.5	1/4	1/2.5	1/6	1/4	1/6	1/4	1/6	1/4	2.5/2.5	2.5/10	2.5/2.5	2.5/10	2.5/2.5	2.5/10	4/50	4/16	4/50	4/50
	Non-prefabricated terminal hard wire		1/4	1/4	1/4	1/4	1/4	1/4	1.5/10	1.5/6	1.5/10	1.5/6	1.5/10	1.5/6	2.5/2.5	2.5/10	2.5/2.5	2.5/10	2.5/2.5	2.5/10	4/50	4/25	4/50	4/50
Size and tightening torque of terminal block screw (N.m)			M3.5						M4						M8						M10			
			0.8						1.2						3.5						4			
AC coil power	50Hz	Pull-in (VA)	100						100						200						200			
		Hold (VA)	9						9						20						30			
		Power (W)	2 ~ 3						2 ~ 3						6 ~ 10						6 ~ 10			
Operating range			Pull-in voltage: 85%Us ~ 110%Us; Release voltage: 20%Us ~ 75%Us																					
Basic parameters of aux. contact			AC-15: 1.6A/220V, 0.95/380V; DC-13: 0.15A/220V; Ith: 10A; UI (V): 690V; Uimp (kV): 6kV; Rated limit short circuit current matching SCPD model: RT16-00, In: 10A																					

Note: When the rated operating voltage is AC220V/230V, AC380V/400V, the AC-1 rated operating current is equal to the resistive current of free air.

TGC1s Series AC Contactor

6 Accessory Installation Diagram

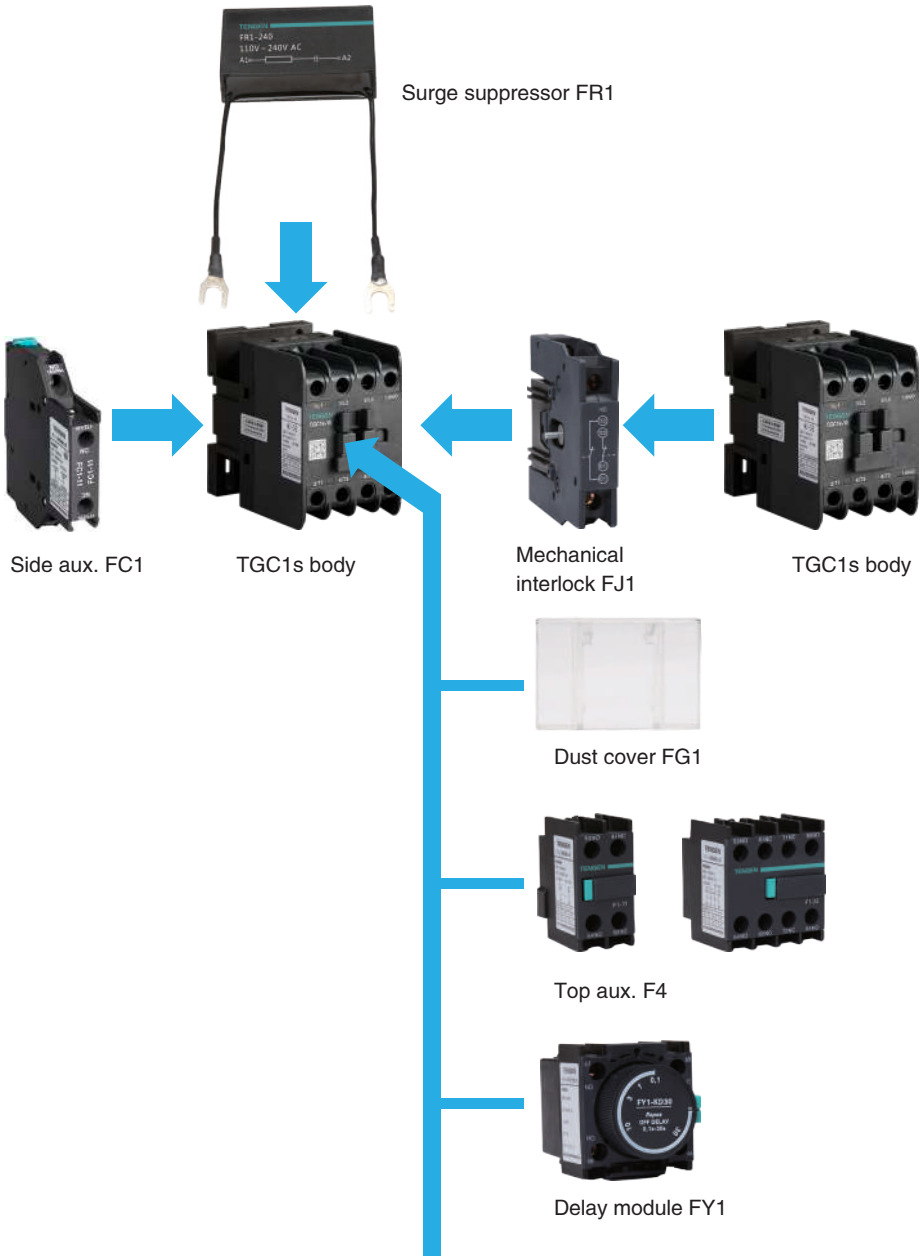

TGC1s Series AC Contactor

7 Outline and Installation Dimensions

7.1 TGC1s-09~38

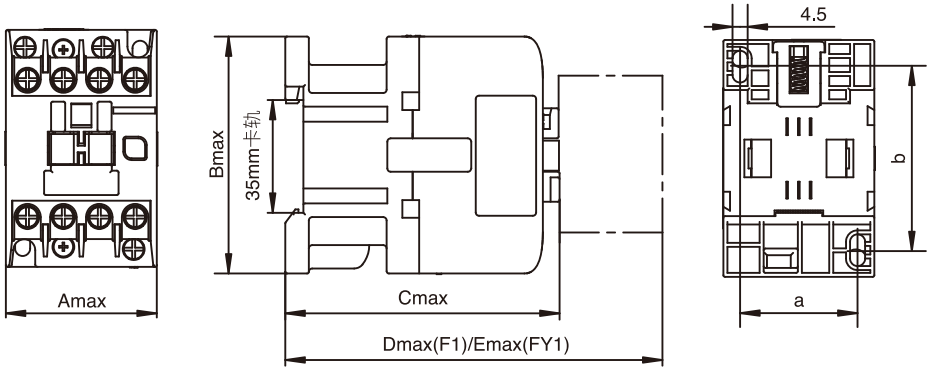

Fig. 1 TGC1s-09~38 outline and installation dimensions drawings

Unit: mm

Spec. & Model	Amax	Bmax	Cmax	Dmax	Emax	a	b	c	d
TGC1s-09 ～ 18	45	71	82	120	140	35	50/60	-	-
TGC1s-25 ～ 38	56	82.5	96	134	154	40	50/60	-	-

7.2 TGC1s-40~95

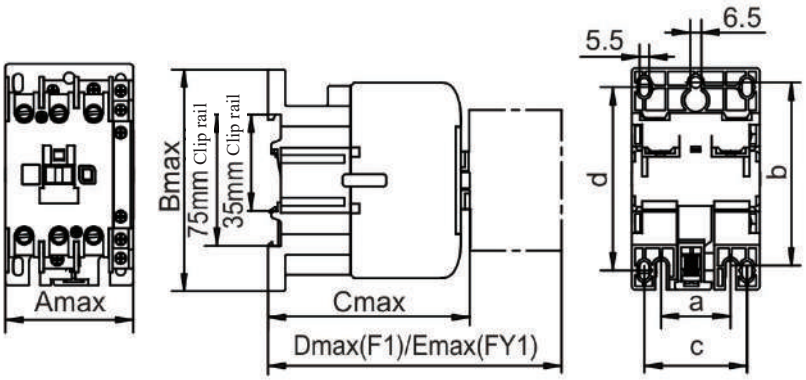

Fig. 2 TGC1s-40-95 Outline and installation dimensions diagram

Unit: mm

Spec. & Model	Amax	Bmax	Cmax	Dmax	Emax	a	b	c	d
TGC1s-40 ～ 65	73.5	127	116	154	174	40	100/110	59	100/110
TGC1s-80 ～ 95	84.5	126.5	123	161	181	40	100/110	64	102/111

TGC1s Series AC Contactor

7.3 TGC1s-09N~38N

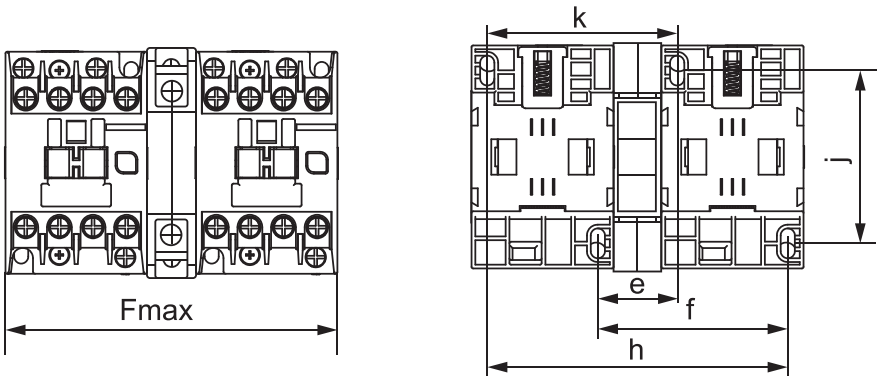

Fig. 3 TGC1s-09N~38N outline and installation dimensions drawings

Unit: mm

Spec. & Model	Fmax	e	f	h	j	k
TGC1s-09N ～ 18N	106	25	60	95	50/60	60
TGC1s-25N ～ 38N	129	31.5	71	111.5	50/60	71

7.4 TGC1s-40N~95N

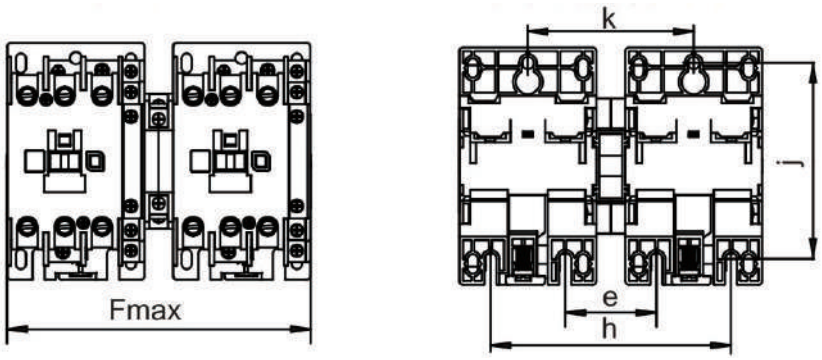

Fig. 4 TGC1s-40N~95N outline and installation dimensions drawings

Unit: mm

Spec. & Model	Fmax	e	f	h	j	k
TGC1s-40N ～ 65N	163	50	-	130	100/110	90
TGC1s-80N ～ 95N	186	60	-	140	100/110	100

TGC1 Series AC Contactor

1 Overview

The TGC1 series AC contactor (hereinafter referred to as contactors) feature with exquisite appearance and small shape, mainly used in AC 50Hz (or 60Hz) power system with a rated operating voltage up to 690V, with a rated working voltage of 380V under AC-3 use category, and with a rated current up to 95A for remote power-on and power-off of circuit, and can be combined with the appropriate thermal relay to form an electromagnetic starter for protection of circuit that overload may occur. The contactor is suitable for frequent start and control of AC motor.

This product complies with standard IEC 60947-4-1.

2 Type Designation

2.1 Model description

TGC1 - 18 10 N

- **N** — Function code
  - Default: Conventional contactor
  - N: Reversible contactor
- **10** — Auxiliary contact type
  - 10: 1NO+0NC(for 06~38A)
  - 01: 0NO+1NC(for 06~38A)
  - 11: 1NO+1NC(for 09~95A)
  - 11x：1NO+1NC(for 09~38A)
- **18** — Rated current
  - 06: 06A 09: 09A 12: 12A 18: 18A
  - 25: 25A 32: 32A 38: 38A 40: 40A
  - 50: 50A 65: 65A 80: 80A 95: 95A
- **TGC1** — Contactor model

Notes: The contactor product with 09~38A standard 11 aux. can select 0911x ~ 3811x;
It is planned that the 0911-3811 specification exits the market, and the TGCA-0911~3811 specification is used instead of it.

2.2 AC contactor model table

Motor power Pe (kW AC-3,380V)	Rated current Ie (A)	Auxiliary contact		Item description
		Normal open NO	Normal closed NC	
2.2	6	1	-	TGC1-0610*
		-	1	TGC1-0601*
4	9	1	-	TGC1-0910*
		-	1	TGC1-0901*
		1	1	TGC1-0911*
5.5	12	1	-	TGC1-1210*
		-	1	TGC1-1201*
		1	1	TGC1-1211*
7.5	18	1	-	TGC1-1810*
		-	1	TGC1-1801*
		1	1	TGC1-1811*
11	25	1	-	TGC1-2510*
		-	1	TGC1-2501*
		1	1	TGC1-2511*
15	32	1	-	TGC1-3210*
		-	1	TGC1-3201*
		1	1	TGC1-3211*

TGC1 Series AC Contactor

Continued table

18.5	38	1	-	TGC1-3810*
		-	1	TGC1-3801*
		1	1	TGC1-3811*
18.5	40	1	1	TGC1-4011*
22	50	1	1	TGC1-5011*
30	65	1	1	TGC1-6511*
37	80	1	1	TGC1-8011*
45	95	1	1	TGC1-9511*

Coil voltage specification table									
Coil voltage	V	24	36	48	110	220	380	400	415
Coil voltage code	50Hz	B5	C5	E5	F5	M5	Q5	V5	N5
	50/60Hz	B7	C7	E7	F7	M7	Q7	V7	N7

3 Technical Parameters

3.1 Parameters and technical performance

Model			TGC1-06	TGC1-09	TGC1-12	TGC1-18	TGC1-25	TGC1-32	TGC1-38	TGC1-40	TGC1-50	TGC1-65	TGC1-80	TGC1-95
Main circuit characteristics														
Number of poles			3 Poles											
Rated insulation voltage Ui V			690											
Rated withstand impulse voltage Uimp kV			6										8	
Rated operating voltage Ue V			220/230，380/400，660/690											
Rated making capacity			Power-on current:10×Ie(AC-3)or12×Ie(AC-4)											
Rated breaking capacity			Making and breaking current: 8×Ie(AC-3)or10×Ie(AC-4)											
Rated operating current Ie	380V 400V	AC-3 A	6	9	12	18	25	32	38	40	50	65	80	95
		AC-4 A	2.6	3.5	5	7.7	8.5	12	14	18.5	24	28	37	44
	660V 690V	AC-3 A	3.8	6.6	8.9	12	18	22	22	34	39	42	49	49
		AC-4 A	1	1.5	2	3.8	4.4	7.5	8.9	9	12	14	17.3	21.3
Free air resistive current Ith A			16	20	20	25	32	40	50	50	60	80	110	110
Conventional free air thermal currentIth 0911(x)~3811(x) A			-	25	25	32	40	50	-	-	-	-	-	-
Rated work power Pe	380V 400V	AC-3 kW	2.2	4	5.5	7.5	11	15	18.5	18.5	22	30	37	45
		AC-4 kW	1.1	1.5	2.2	3.3	4	5.4	5.5	7.5	11	15	18.5	22
	660V 690V	AC-3 kW	3	5.5	7.5	10	15	18.5	18.5	30	33	37	45	45
		AC-4 kW	0.75	1.1	1.5	3	3.7	5.5	6	7.5	10	11	15	18.5
Electrical life	AC-3	10,000 times	120					100					80	
	AC-4	10,000 times	25							20			13	
Mechanical life	10,000 times		1000							900			650	
Operating frequency	Electrical life	AC-3times/h	1200					600						
		AC-4times/h	300										120	
	Mechanical life	times/h	3600											

TGC1 Series AC Contactor

Continued table

Model			TGC1-06	TGC1-09	TGC1-12	TGC1-18	TGC1-25	TGC1-32	TGC1-38	TGC1-40	TGC1-50	TGC1-65	TGC1-80	TGC1-95
Fuse used in SCPD														
Model of fuse used			RT16-00 20	RT16-00 20	RT16-00 20	RT16-00 25	RT16-00 40	RT16-00 50	RT16-00 63	RT16-00 50	RT16-00 63	RT16-00 80	RT16-00 100	RT16-00 125
Matched thermal relay			TGR1-18				TGR1-38			TGR1-95				
			TGR1-25					/						
Main circuit terminal wiring capacity														
Cold-pressed terminal	Qty.		1	2	1	2	1	2	1	2	1	2	1	2
	Non-prefabricated terminal flexible cable	mm^2	1/4	1/4	1/4	1/4	1/4	1/4	1/4	1/4	1.5/6	1.5/6	1.5/6	1.5/6
	Prefabricated terminal flexible cable	mm^2	1/4	1/2.5	1/4	1/2.5	1/4	1/2.5	1/4	1/2.5	1/6	1/4	1/6	1/4
	Non-prefabricated terminal hard cable	mm^2	1/4	1/4	1/4	1/4	1/4	1/4	1/4	1/4	1.5/10	1.5/6	1.5/10	1.5/6
Coils														
Coil power	50Hz	Pull-in VA	70				70（100）			200			200	
		Holding VA	7				7（9）			20			26	
		Power W	2~3（1.8~2.7）				2~3（3~4）			6~10			6~10	
Allowable control loop voltage Us	Pull-in	V	Pull-in voltage: 85%Us~110%Us											
	Release	V	Release voltage: 20%Us~75%Us											
Auxiliary contact														
Basic parameters of auxiliary contact	Ith	A	10											
	Rated control capacity	AC-15 VA	360											
		DC-13 W	33											
Certification			CE, CCC											

Model			TGC1-65	TGC1-80	TGC1-95
Cold-pressed terminal	Qty.		1	2	1	2	1	2	1	2	1	2
	Non-prefabricated terminal flexible cable	mm^2	2.5/25	2.5/16	2.5/25	2.5/16	2.5/25	2.5/16	4/50	4/25	4/50	4/25
	Prefabricated terminal flexible cable	mm^2	2.5/25	2.5/10	2.5/25	2.5/10	2.5/25	2.5/10	4/50	4/16	4/50	4/16
	Non-prefabricated terminal hard cable	mm^2	2.5/25	2.5/10	2.5/25	2.5/10	2.5/25	2.5/10	4/50	4/25	4/50	4/25

Note: 1NO+1NC value is in the TGC1-09~38 specifications ( ).

3.2 Coil voltage specification table

Coil voltage	V	24	36	48	110	220	380	400	415
Coil voltage code	50Hz	B5	C5	E5	F5	M5	Q5	V5	N5
	50/60Hz	B7	C7	E7	F7	M7	Q7	V7	N7

4 Operating Conditions

4.1 Ambient temperature (around the equipment): Allowable working temperature: -35ºC~+70ºC; normal working temperature: -5ºC~+40ºC; when the working environment temperature is higher than +40ºC, by considering that the allowable limit temperature rise of the product will be reduced, the rated working current must be reduced (the derating coefficient sees table below), and the quantity of the contactors mounted in the standard assembly shall be decreased, otherwise the product may be damaged, the service life may be shortened, and the working reliability may be reduced, and furthermore the product action range may be affected; when the working environment temperature is lower than -5°, considering that the insulation and lubrication grease may be congealed at too low ambient temperature resulting in product action failure, please contact the manufacturer and user for design or use.

TGC1 Series AC Contactor

Ambient temperature ℃	40	50	55	60	65	70
Correction factor	1	0.98	0.95	0.93	0.875	0.75

4.2 Installation conditions: The inclination between the mounting surface and the vertical surface is not more than ±22.5ºC, and the installation category is Class III;

4.3 Pollution degree: 3

4.4 Altitude: Not more than 2,000 meters

4.5 Atmospheric conditions: When the maximum temperature is +70ºC, the relative humidity of the air does not exceed 50%. Higher relative humidity is allowed at lower temperatures, for example, up to 90% at 20ºC. Special measures should be taken for condensation occurred occasionally due to temperature changes;

4.6 The product should be installed and used in a place where there is no obvious shaking, impact and vibration.

5 Select Bulk Parts to Assemble Star-Delta Starter

The start-delta reduced-voltage starter consists of three common AC contactors to realize reduced-volage start by changing the motor winding connection. As the motor starting current is in direct proportion to the power voltage, this starting current is only 1/3 of the full volage starting current, and the starting moment is only 1/3 of the full voltage starting moment. Therefore, this start method is only suitable for non-load start or low load torque, requiring that the load torque is increased gradually.

5.1 Start-delta starting wiring diagram

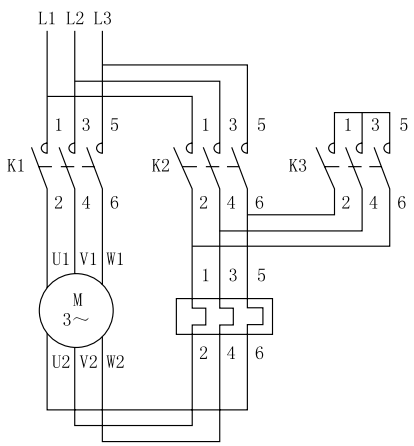

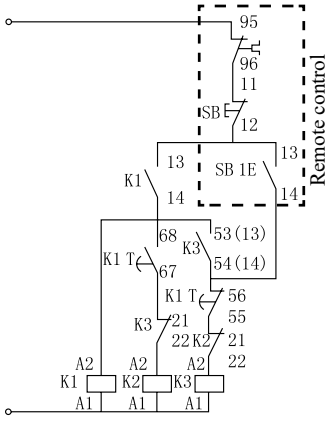

TGC1 Series AC Contactor

5.2 Selection table for start-delta starting microcomponent contactor

380V three-phase squirrel cage motor rated current Ie		Power (kW)	AC contactor model & Spec.		
Power (kW)	Rated current Ie (A)	0.58 rated current Ie (A)	Direct connection of one unit K1	Delta connection of one unit K2	Start connection of one unit K3
5.5	11.5	6	TGC1-0910	TGC1-0901	TGC1-0901
7.5	15.5	9	TGC1-1210	TGC1-1201	TGC1-0901
9	18.5	11	TGC1-1810	TGC1-1801	TGC1-0901
10	20	11.6	TGC1-1810	TGC1-1801	TGC1-0901
11	22	13	TGC1-1810	TGC1-1801	TGC1-0901
15	30	16	TGC1-2510	TGC1-2501	TGC1-1201
18.5	37	22	TGC1-2510	TGC1-2501	TGC1-1801
22	44	26	TGC1-3210	TGC1-3201	TGC1-1801
25	50	29	TGC1-3210	TGC1-3201	TGC1-2501
30	60	35	TGC1-4011	TGC1-4011	TGC1-2501
33	68	39.5	TGC1-4011	TGC1-4011	TGC1-3201
37	72	40	TGC1-5011	TGC1-5011	TGC1-3201
40	79	46	TGC1-5011	TGC1-5011	TGC1-4011
45	85	47	TGC1-6511	TGC1-6511	TGC1-4011
51	98	56	TGC1-6511	TGC1-6511	TGC1-4011
55	105	58	TGC1-6511	TGC1-6511	TGC1-4011
59	112	65	TGC1-8011	TGC1-8011	TGC1-5011
63	117	67.9	TGC1-8011	TGC1-8011	TGC1-5011
75	138	78	TGC1-9511	TGC1-9511	TGC1-6511

TGC1 Series AC Contactor

6 Outline and Installation Dimensions

6.1 TGC1-06~38

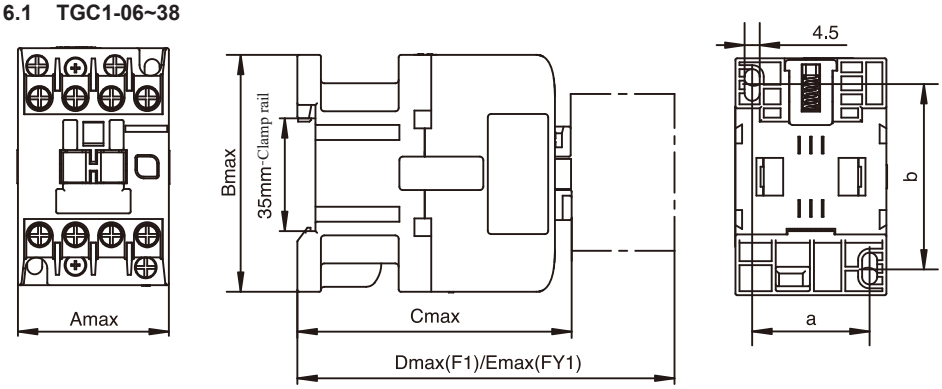

Unit: mm

Spec. & Model	Amax	Bmax	Cmax	Dmax	Emax	a	b	c	d
TGC1-06	45	74	73	111	131	35	50/60	-	-
TGC1-09~18	45	71(73)	82(87)	120(120.5)	140	35	50/60	-	-
TGC1-25~38	56	82.5	96(98)	134	154	40	50/60	-	-

Note: 1NO+1NC value is in the TGC1-09~38 specifications ().

6.2 TGC1-40~95

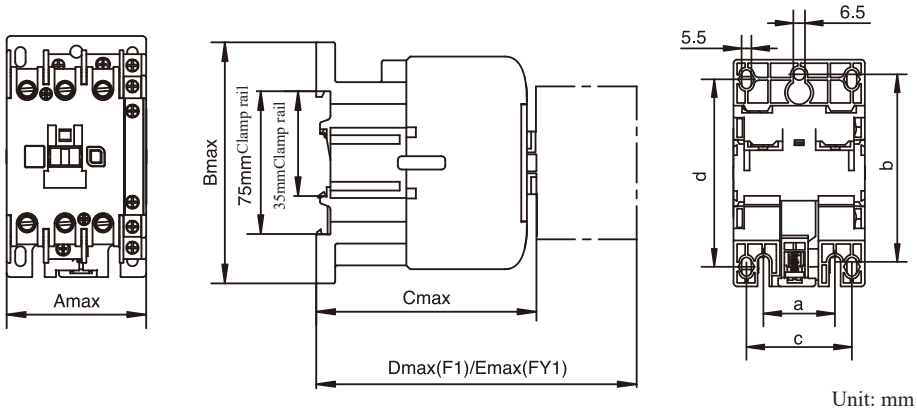

Unit: mm

Spec. & Model	Amax	Bmax	Cmax	Dmax	Emax	a	b	c	d
TGC1-40~65	73.5	127	116	154	174	40	100/100	59	100/110
TGC1-80~95	84.5	126.5	123	161	181	40	100/100	64	102/111

TGC1 Series AC Contactor

7 Accessory Installation Diagram

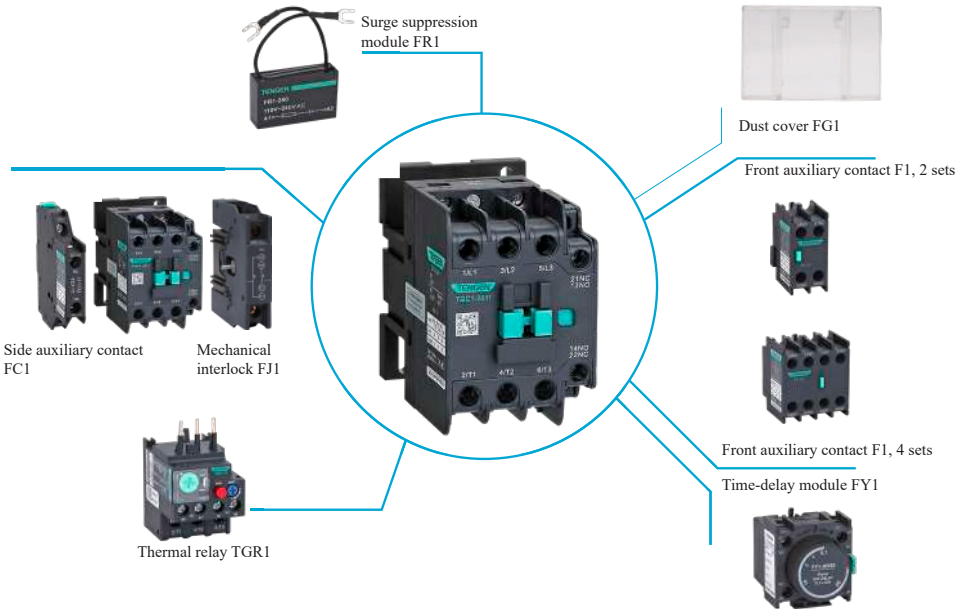

Note: Only one type of top mounting accessory can be required.
One set can be installed on the left and right side auxiliary sides, respectively; when a mechanical interlock is provided, only one set is installed.

TGC1-06~38 Wiring Diagram

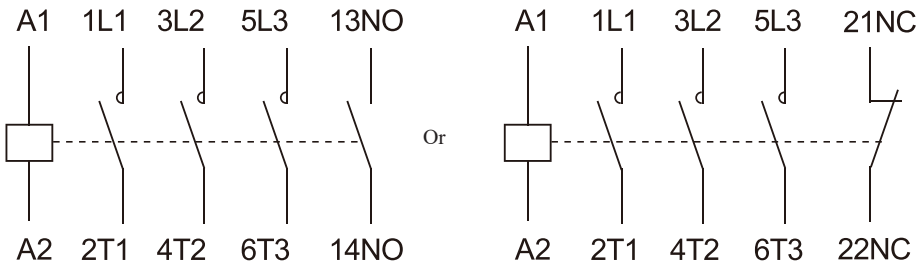

TGC1-09~95 Wiring Diagram

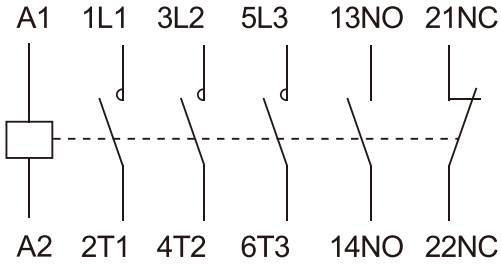

TGC1 Series AC Contactor

8 Accessories Model

8.1 Auxiliary contact F1/FC1

F C 1 - 22

- 22: Contact type
  - 2 sets: 11, 20, 02
  - 4 sets: 22,40,04,31,13(only suitable for Front auxiliary)
- 1: Design code.
- C: Auxiliary contact
  - Default: Front auxiliary c: Side auxiliary
- F: Accessory code

8.1.1 Used in normal environment

Mounting location	Number of poles	Contact layout	Contact type	Available product	Item description
Front	2	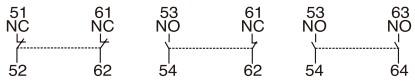	1NO+1NC	TGC1-06~95	F1-11
			2NO+0NC		F1-20
			0NO+2NC		F1-02
	4	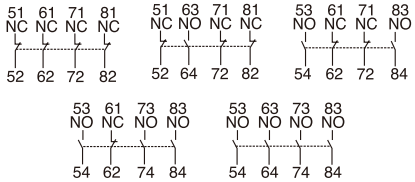	2NO+2NC		F1-22
			4NO+0NC		F1-40
			0NO+4NC		F1-04
			3NO+1NC		F1-31
			1NO+3NC		F1-13
Side	2	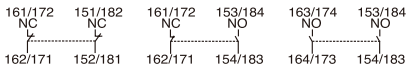	1NO+1NC	TGC1-09~95	FC1-11
			2NO+0NC		FC1-20
			0NO+2NC		FC1-02

8.1.2 The maximum number of auxiliary contacts that can be matched

Contactor	Momentary auxiliary contact module		
Model	Front installed		Side installed
	2 poles	4 poles	2 poles
TGC1-06	1	Or 1	/
TGC1-09~95	1	Or 1	2

TGC1 Series AC Contactor

8.2 Air time-delay auxiliary contact FY1

F Y 1 - K T 3

- 3: Time-delay range
  3:01~3s 30:01~30s
  180:10~180s
- T: Time-delay type
  T: Power-on delay
  D: Power-off delay
- K: Air time-delay auxiliary contact
- 1: Design code.
- Y: Time-delay module
- F: Accessory code

Installation location	Delay type	Number of contacts	Wiring diagram	Delay range	Available product	Item description
Front	Power-on delay	1NO+1NC	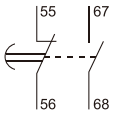	0.1~3s	TGC1-06~95	FY1-KT3
				0.1~30s		FY1-KT30
				10~180s		FY1-KT180
	Power-off delay	1NO+1NC	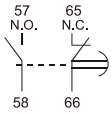	0.1~3s		FY1-KD3
				0.1~30s		FY1-KD30
				10~180s		FY1-KD180

The waiting time between the opening of the N/C contact and the closing of the N/O contact is 40ms±15ms.

8.3 Mechanical and electrical interlock FJ1

F J 1 - 06 E

- E: Specification
  L: Mechanical interlock
  E: Mechanical and electrical interlock
- 06: Frame current:
  6:6A 38:38A
  95:95A
- 1: Design code.
- J: Mechanical interlock
- F: Accessory code

Installation location	Interlocking method	Applicable Products	Item Description	Aux. specification of applicable product
Side	Mechanical interlock	TGC1-06	FJ1-06L	
		TGC1-09 ~ 38	FJ1-38L	1NO+1NC
		TGC1-40 ~ 95	FJ1-95L	
	Mechanical + electrical interlock	TGC1-09 ~ 38	FJ1-38E	1NO or 1NC
		TGC1-40 ~ 95	FJ1-95E	

TGC1 Series AC Contactor

8.4 Dust cover FG1

F G 1 - 38

- 38 — Frame current:
  - 18: For 06-18A
  - 38: For 25-38A
  - 65: For 40-65A
  - 95: For 80-95A
- 1 — Design code.
- G — G: Transparent cover
- F — F: Accessory code

Installation location	Applicable Products	Item Description
Front	TGC1-06~18A	FG1-18
	TGC1-25~38A	FG1-38
	TGC1-40~65A	FG1-65
	TGC1-80~95A	FG1-95

8.5 Surge suppression module (resistance-capacitive type) FR1

F R 1 - 48

- 48 — Protection voltage range:
  - 48: 24…48V
  - 127: 50…127V
  - 240: 110…240V
  - 415: 380…415V
- 1 — Design code.
- R — R: Surge suppression module
- F — F: Accessory code

Product Features:

8.5.1 Effectively protect circuits that are more sensitive to "high-frequency" interference. Used for sinusoidal voltage waveforms, that is, when the total harmonic distortion is less than 5%.

8.5.2 The maximum voltage is limited to 3Uc, and the maximum oscillation frequency is limited to 400Hz.

8.5.3 The breaking time is slightly increased (1.2 to 2 times the normal time).

Installation location	Voltage protection range		Applicable Products	Item Description
	AC symbol	DC symbol		
Front	~	—	TGC1-06~95	FR1-48
	~	—		FR1-127
	~	—		FR1-240
	~	—		FR1-415

TGC1 Series AC Contactor

9 Main Parameters And Technical Performance Indicators Of Accessories

Item			Main technical parameters	
Rated working voltage V			Up to 380	
Rated insulation voltage V			690	
Free air resistive current A			10	
Rated making capacity			Making current 10Ie (AC-15) or (DC-13)	
Short circuit protection			gG wire: 10A	
Control capacity	Auxiliary contact	AC-15	380V	0.95A
		DC-13	220V	0.15A
	FY1 air time-delay auxiliary contact	AC-15	380V	0.95A
		DC-13	220V	0.15A
Standard			IEC 60947-5-1	
Housing protection grade			IP20	
Cable connection mm^2	Flexible cable without cold-pressed terminal		1~4	
			1~4	
	Flexible cable with cold-pressed terminal		1~4	
			1~2.5	
	Hard wire		1~4	
			1~4	
Screw size			M3.5	
Tightening torque N ·M			0.8	

TGC1 (120 ~ 630A) Series AC Contactor

1 Overview

TGC1 (120 ~ 630A) full series AC contactor is primarily used in the AC 50Hz (or 60Hz) power system with the rated working voltage up to 690V and the rated working current up to 630A when the rated working voltage 380V under the AC-3 usage category. When used in the AC motor that is started and controlled frequently under the 400V(380V) AC-3 usage category, it can be suitable for remotely power on/off the circuit. This series can form an electromagnetic starter with an appropriate thermal overload relay.

Standard: IEC60947-4-1

Certificates: CE

2 Type Designation

TGC1 - 120 22 AC110 50Hz

- 50Hz: Coil power frequency: 50Hz, 50/60Hz
- AC110: Coil voltage:
  - 120-225A: AC110 AC127 AC220 AC380
  - 265-630A: AC/DC: 110~127V
  - AC/DC: 220~240V
  - AC/DC: 380~415V
- 22: Aux. contact:
  - 22: 2 NO + 2 NC
  - 31: 3 NO + 1 NC
  - 13: 1 NO + 3 NC
  - 40: 4 NO
  - 04: 4 NC
- 120: Rated current:
  - 120/160/185/225/265/330/400/500/630
- TGC1: Product model

3 Main Parameters

Rated working current	120A/160A/185A/225A/265A/330A/400A/500A/630A
Rated insulation voltage Ui	1000V
Number of poles	Three-pole
AC coil (225 shell frame)	110/127/220/380V (50Hz)
AC and DC general wide-voltage coil	110~127V, 220~240V, 380~415V (50/60Hz)
Accessories	Top assist, side assist, air delay head, dust cover
Certification	CE

TGC1 (120 ~ 630A) Series AC Contactor

4 Product Highlights

4.1 The size is smaller 20% ~ 40% than that of the similar product on the market, saving space in cabinet.

TGC1

Compact

CJ20

Wide 20%

CJX2F

Wider 40%

4.2 400 and 630 shell frame DC coil holding features with low power consumption, noiseless, and energy saving and silence.

TGC1 (120 ~ 630A) Series AC Contactor

5 Conditions and Installation Conditions

5.1 Ambient air temperature: The limit working temperature is ranged -35℃~+70℃, the normal working temperature is ranged -5℃~+40℃, and the mean temperature within 24h is not higher than +35℃. Derating is considered if working out of the normal working range; the table below gives the correction factors for different working currents when the ambient temperature exceeds +40℃ with the rated working voltage unchanged;

Ambient temperature ℃	40	50	60	70
Correction factor	1	0.875	0.75	0.625

5.2 Relative humidity: The relative air humidity does not exceed 50% at the maximum temperature +40℃, and a higher relative humidity is allowed at a lower temperature, such as up to 90% at +20℃. Special measures are taken for condensation occurred occasionally due to temperature changes;

5.3 Altitude: The altitude shall not exceed 2,000 meters at the installation site; the table below gives the correction factors for rated impulse withstand voltage and rated working current with the rated working voltage unchanged;

Altitude (m)	2000	3000	4000
Correction factor for rated impulse withstand voltage	1	0.88	0.78
Correction factor for rated working current	1	0.92	0.90

5.4 Pollution degree: 3

5.5 Installation category: Class III

5.6 Protection grade: The protection grade of the housing of main circuit of contactor is IP00, and of control circuit and auxiliary circuit is IP20

5.7 There is no obvious shaking, impact or vibration, conductive dust and rain and snow immersion. The inclination between the mounting plane and the vertical plane is not greater than ±5°

5.8 The appropriate transport and storage temperature is ranged -25℃~+55℃, and can be up to +70℃ within a short time (24h); the storage place shall be well-ventilated and dry free from rain and snow immersion and sun shining

TGC1 (120 ~ 630A) Series AC Contactor

6 Technical Parameters

Model			TGC1-120	TGC1-160	TGC1-185	TGC1-225
Rated working current (A)	220V/230V	AC-3	120	160	185	225
		AC-4			160	185
	380V/400V	AC-3	120	160	185	225
		AC-4			160	185
	660V/690V	AC-3	86	107	107	118
		AC-4				107
Conventional heating current (A)			200		275	
Rated insulation voltage (V)			1000			
Rated impulse withstand voltage (kV)			12			
Rated making capaicty			Rated making current: 10×Ie(AC-3) or 12×Ie(AC-4)			
Rated breaking capacity			Rated breaking current: 8×Ie(AC-3) or 10×Ie(AC-4)			
Rated limit short-circuit current Iq (kA)			50			
Power of controlled 3-phase motor (kW)		220V/230V	37	45	55	63
		380V/400V	55	75	90	110
		660V/690V	80	100	100	110
Electrical life ($\times 10^4$ times) 400V		AC-3	120		120	
		AC-4	1.5			1
Flashover distance (mm)		380V/400V	15			
		660V/690V	35			
Mechanical life ($\times 10^3$ times)			600			
Model and rated current of matched fuse			gG224		gG315	
Matched thermal overload relay			JRS2-135 Stand-alone installation	JRS2-180 Stand-alone installation		JRS2-400 Stand-alone installation
Coil power (50Hz)		Pull-in VA	500			
		Hold VA	50			
Action range		Pull-in voltage	(85% ~ 110%) Us			
		Release voltage	(20% ~ 75%) Us			

TGC1 (120 ~ 630A) Series AC Contactor

Table, continued

Model			TGC1-265	TGC1-330	TGC1-400	TGC1-500	TGC1-630
Rated working current (A)	220V/230V	AC-3	265	330	400	500	630
		AC-4			330		500
	380V/400V	AC-3	265	330	400	500	630
		AC-4			330		500
	660V/690V	AC-3	170	235	303	353	400
		AC-4	137	170	235	303	353
Conventional heating current (A)			315	380	450	630	700
Rated insulation voltage (V)			1000				
Rated impulse withstand voltage (kV)			12				
Rated making capaicty			Rated making current: 10×Ie(AC-3) or 12×Ie(AC-4)				
Rated breaking capacity			Rated breaking current: 8×Ie(AC-3) or 10×Ie(AC-4)				
Rated limit short-circuit current Iq (kA)			50				
Power of controlled 3-phase motor (kW)		220V/230V	75	90	132	160	200
		380V/400V	132	160	200	250	335
		660V/690V	160	200	300	335	350
Electrical life ($\times 10^4$ times) 400V		AC-3	80			80	
		AC-4	1.2		1	0.6	
Flashover distance (mm)		380V/400V	15		20		
		660V/690V	35		40		
Mechanical life ($\times 10^3$ times)			600				
Model and rated current of matched fuse			gG400		gG500	gG630	gG800
Matched thermal overload relay			JRS2-400 Stand-alone installation			JRS2-630 Stand-alone installation	
Coil power (50Hz)		Pull-in VA	700			800	
		Hold VA	20			20	
Action range		Pull-in voltage	(85% ～ 110%)Us				
		Release voltage	(10% ～ 75%)Us				

TGC1 (120 ~ 630A) Series AC Contactor

7 Accessories Installation Diagram

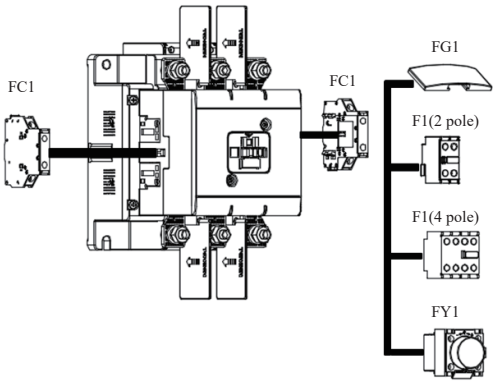

Code	Name
FC1	Side assist
F1	Top assist
FY1	Delay head
FG1	Dust cover
To be developed	Mechanical interlock

The standard insulation spacer coils of all specifications can satisfy the upper and lower wiring requirements for more convenient connection.

Conventional heating current Ith	10A
Rated insulation voltage Ui (V)	690
Control capacity of auxiliary contact	AC-15:1.6A /220V ,0.95A/380V; DC -13:0.15A/220V
Rated impulse withstand voltage Umip (kV)	6
Wiring capacity (N.m)	0.8(M3.5)

8 Outline and Installation Dimensions

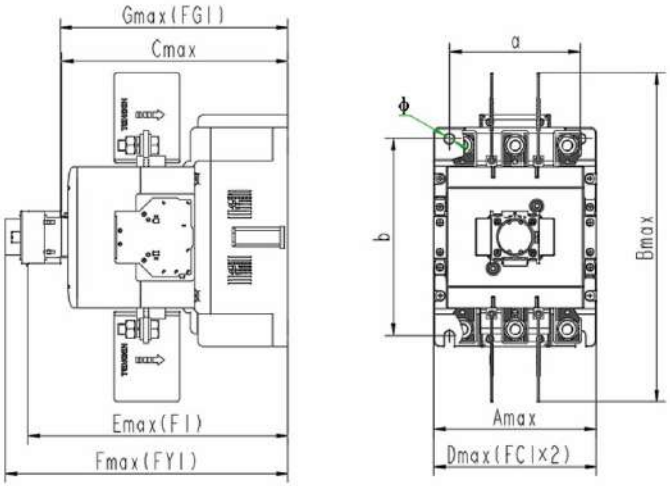

Unit: mm

Spec. & Model	Amax	Bmax	Cmax	Dmax	Emax	Fmax	Gmax	a	b	φ
TGCA-120 ~ 225	121	282	167	125	201	220	169	96±0.5	134±0.8	7
TGCA-265 ~ 400	150	300	208	151	241	261	210	120±0.5	180±0.8	9
TGCA-500 ~ 630	165	313	226	166	263	284	228	130±0.5	180±0.8	9

TGC1 (120 ~ 630A) Series AC Contactor

9 Product Wiring Capacity

Product sepcification			TGC1-120~225	TGC1-265~400	TGC1-500~630
Main circuit	Copper wire	Qty.	1/2	1/2	1/2
		Sectional area mm^2	10 ~ 150	50 ~ 240	50 ~ 240
	Copper busbar	Qty.	2	2	2
		Size mm	25×3	30×5	40×3
	Fastening screw size and tightening torque N.m		M10 14N.m		
Control and auxiliary circuit	Non-prefabricated terminal soft (hard) wire	1 wire mm^2	1 ~ 4		
		2 wires mm^2	1 ~ 4		
	Prefabricated terminal	1 wire mm^2	1 ~ 4		
		2 wires mm^2	1 ~ 2.5		
	Fastening screw size and tightening torque N.m		M3.5 0.8N.m		

10 Electrical life curve

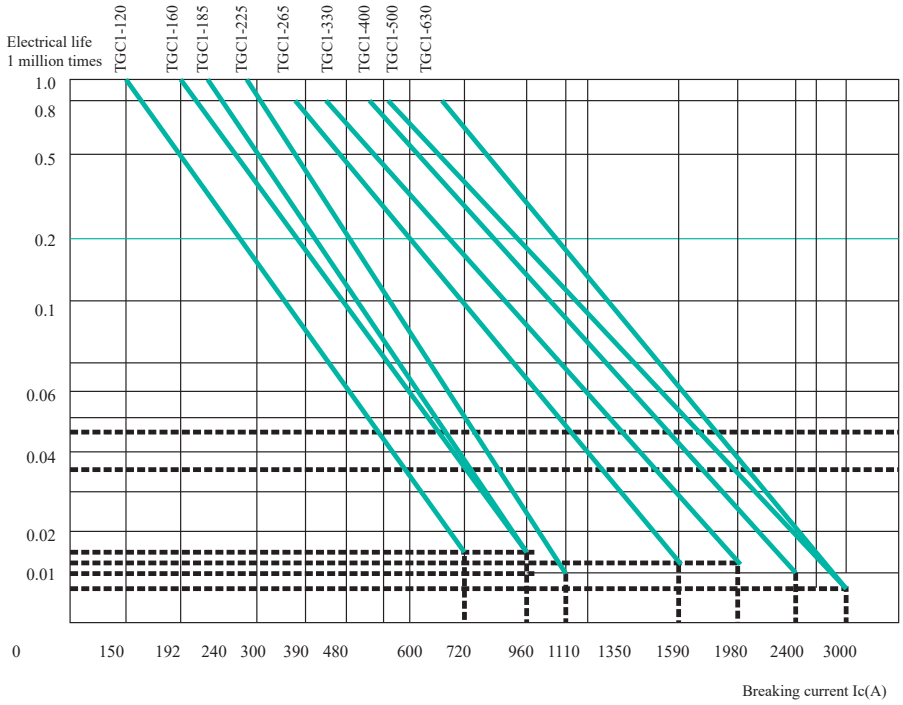

AC-4 Electrical life curve

TGCA-06M-12M Mini AC Contactor

1 Overview

TGCA-06M-12M Mini AC Contactor (hereinafter referred to as contactor) features with artistic appearance and small size. It is primarily used in the AC 50Hz(50/60Hz) power system with the rated working voltage up to 690V, and with the rated working current up to 12A at the rated working voltage 380V under the AC-3 usage category for remotely marking and breaking circuit breaker. The contactor is suitable for AC motor with frequent starts and controls.

Standard: IEC 60947-4-1

Certification: CE

2 Type Designation

TGCA - 06 M 10 Z N 24V 50

- 50: Frequency: 50Hz, 50/60Hz
- 24V: Coil voltage
  - AC: 24/36/48/110/220 380/400/415
  - DC: 24/48/110/220
- N: Directional or not:
  - Omitted: Nondirectional
  - N: Reversible
- Z: Coil type:
  - Omitted: AC
  - Z: DC
- 10: Aux. contact:
  - 10: 1NO
  - 01: 1NC
  - Main contact:
  - 04: 4NO
  - 08: 2NO + 2NC
- M: Mini type
- 06: Current: 06/09/12
- TGCA: Contactor model

3 Technical Parameters

Rated working current Ie	6A~12A
Rated working voltage Ue	220V~690V
Rated insulation voltage	690V
Number of poles	3P, 4P
Coil control type	AC, DC
Insatllation method	35mm rail-mounted, mounted through screws

TGCA-06M-12M Mini AC Contactor

4 Operating Conditions

Installation category	Class III
Pollution degree	3
Proteciton grade	IP20
Ambinet air temperature	Ambient temperatgure (surrounding the equipment): permissional working temperature: -35℃~+70℃; normal working temperature: -5℃~+40℃; when the working tempeature is higher than +40℃, it must be considered taht the permissonal limit temperature rise of product shall be reduced. When the working temperture is below than -5℃, it shall be considred that greased used for insulation and lubrication may be frozen in a too low ambient temperature, resulting in action failure of product. The manufacturer shall contact the user for design or usage through negatiation.
Altitude	≤2,000 meters
Atmospheric conditions	The relative air humidity does not exceed 50% at the maximum temperture +70℃, and a higher relative humidity is allowed at a lower temperature, such as up to 90% at 20℃. Special measures shall be taken for condensation occurred occasionally due to temperature changes.
Installation conditions	The inclination between the mounting plane and the vertical plane is not greater than ±22.5°
Impact and vibration	The product shall be installed in places where there is no obvious shaking, impact or vibration.

5 Derating Coefficient Table

Ambinet temperature ℃	40	50	55	60	65	70
Correction factor	1	0.98	0.95	0.93	0.875	0.75

6 Main Circuit Parameters and Performance Indicators

6.1 Main circuit parameters and performance indicators

Model			TGCA-06M	TGCA-09M	TGCA-12M
Rated operating current (A)	220B/230B	AC-3	6	9	12
		AC-4	2.6	3.5	5
	380B/400B	AC-3	6	9	12
		AC-4	2.6	3.5	5
	660B/690B	AC-3	3.8	4.9	4.9
		AC-4	1	1.5	2
Resistive current of free air (A)			20	20	20
Rated insulation voltage (V)			690		
Rated impulse withstand voltage (kV)			6		

TGCA-06M-12M Mini AC Contactor

Table, continued

Model			TGCA-06M		TGCA-09M		TGCA-12M	
Controllable three-phase squirrel case motor power (AC-3) kW		220B/230B	1.5		2.2		3	
		380B/400B	2.2		4		5.5	
		660B/690B	3		4		4	
Intermittent periodic duty-type motor power (AC-4) kW		220B/230B	0.55		0.75		1.1	
		380B/400B	1.1		1.5		2.2	
		660B/690B	0.75		1.1		1.5	
Operating frequency (times/h)	Electrical life	AC-3	1200					
		AC-4	300					
Electrical life (10,000 times)		AC-3	120					
		AC-4	15					
Electrical life (10,000 times)			1200					
Model of matched fuse			RT16 - 00 16		RT16 - 00 20		RT16 - 00 20	
Cold-pressed terminal	Qty.		1	2	1	2	1	2
	Non-prefabricated terminal flexible cable	mm^2	1/2.5	1/2.5	1/2.5	1/2.5	1/2.5	1/2.5
	Prefabricated terminal flexible cable		1/2.5	1/2.5	1/2.5	1/2.5	1/2.5	1/2.5
	Non-prefabricated terminal hard cable		1/2.5	1/2.5	1/2.5	1/2.5	1/2.5	1/2.5
Size and tightening torque of terminal block screw (N.m)			M3					
			0,8					
AC coil power (50Hz)	Pull-in (VA)		40					
	Hold (VA)		9					
DC coil power (W)			1~4					
Main contact structure form			Three normally open, four normally open, two normally open + two normally closed					
Number of equipped aux. contacts	Three poles		One normally open or one normally closed					
	Four poles		-					
Pull-in voltage range			70%-120% (installation angle ± 5°), 85%~110%6Us (installation angle ± 22.5°)					
Coil pull-in voltage range			(20%-759%) Us AC					
Rated making capacity			(10%-759%) Us DC					
Rated breaking capacity			10 x Ie (AC-3) or 12 x Ie(AC-4)					
Coil control power	AC		8 x Ie (AC-3) or 10 x Ie(AC-4)					
	DC		24/48/110/220					
Matched accessories			Top accessory FD1					

6.2 Circuit parameters

Conventional heating current Ith	10A
Rated insulation voltage Ui(V)	690
Control capacity of aux. contact	AC-15:1.6A/220V, 0.95A/380V
	DC-13:0.15A/220V
Rated impulse withstand voltage Uimp(kV)	6
Wiring capacity (N.m)	0.8(M3)

TGCA-06M-12M Mini AC Contactor

7 Accessories

TGCA-06~12M

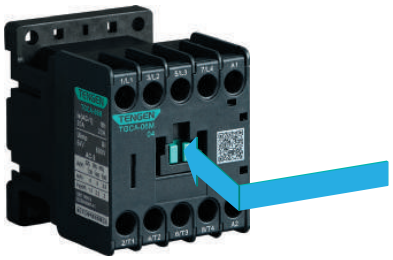

Top aux. contact FD1

8 Outline and Installation Dimensions

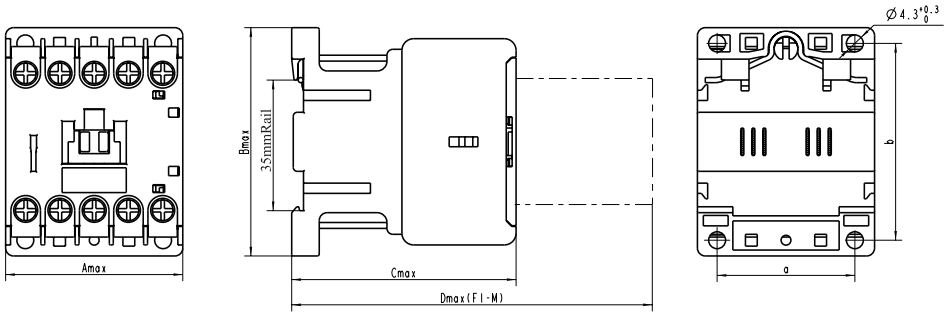

Unit (mm)

Model & Spec.	Amax	Bmax	Cmax	Dmax	a	b
TGCA-06M~12M	45.5	58.5	57.5	92	35	50
TGCA-06M/Z~12M/Z	45.5	58.5	70	104	35	50

TGCA (120~630A) Series AC Contactor

1 Overview

TGCA (120 ~ 630A) full series AC contactor is primarily used in AC 50Hz (or 60 Hz) power system with the rated operating voltage up to 690V, the rated operating voltage of 380V/400V under the AC-3 use category, and with the rated operating voltage up to 630A. Under the AC-3 use category at 380V/400V, it can be used to start and control the AC motor frequently, and to connect and disconnect the circuit remotely, and can be combined with the appropriate thermal overload relay to form an electromagnetic starter.

2 Type Designation

TGCA - 120 22 AC110 50Hz

- 50Hz: Coil power frequency: 50Hz, 50/60Hz
- AC110: Coil voltage:
  - 120-225A: AC110 AC127 AC220 AC380
  - 265-630A: AC/DC: 110~127V
    - AC/DC: 220~240V
    - AC/DC: 380~415V
- 22: Aux. contact:
  - 22: 2 normally open + 2 normally closed
  - 31: 3 normally open + 1 normally closed
  - 13: 1 normally open + 3 normally closed
  - 40: 4 normally open + 0 normally closed
  - 04: 0 normally open + 4 normally closed
- 120: Rated current:
  - 120/160/185/225/265/330/400/500/630
- TGCA: Product model: TGCA

3 Main Parameters

Rated operating current	120A/160A/185A/225A/265A/330A/400A/500A/630A
Rated insulation voltage Ui	1000V
Number of poles	Three-poles
AC coil (225 frame)	110/127/220/380V (50Hz)
AC/DC universal wide voltage coil	110~127V, 220~240V, 380~415V (50/60Hz)
Accessories	Top aux., side aux., air delay head, dust cover
Certification	CE

TGCA (120~630A) Series AC Contactor

4 Product Highlights

4.1 With the volume reduced by 20%~40% by comparing with the similar products on the market, save the space in the cabinet

TGCA

Compact

CJ20

Wide 20%

CJX2F

Wider 40%

4.2 400, 630 frame DC coil holding, with low power consumption, no noise, and energy saving and mute

5 Conditions and Installation Conditions

5.1 Ambient air temperature: The ultimate operating temperature is -35℃~+70℃, the normal operating temperature is -5℃~+40℃, and the mean temperature within 24h does not higher than +35℃. The derating shall be considered if out of the normal working range; the table below gives the correction coefficients for different rated operating currents when the working ambient temperature exceeds +40℃ but the rated operating voltage is unchanged;

Ambient temperature ℃	40	50	60	70
Correction factor	1	0.875	0.75	0.625

TGCA (120~630A) Series AC Contactor

5.2 Humidity: The relative humidity of the air does not exceed 50% when the maximum temperature is +70℃, and a higher relative humidity can be allowed at lower temperatures, such as 90% at +20℃. Special measures should be taken for condensation occasionally occurred due to temperature changes;

5.3 Altitude: The altitude at the installation site does not exceed 2000m; the table below gives the correction coefficients for the rated impulse withstand voltage and rated operating current when the altitude exceeds 2000m and the rated operating voltage remains unchanged;

Altitude (m)	2000	3000	4000
Rated impulse withstand voltage correction factor	1	0.88	0.78
Rated operating current correction factor	1	0.92	0.90

5.4 Pollution degree: 3;

5.5 Installation category (overvoltage category): Class III;

5.6 protection grade: The enclosure protection grade of the main circuit of contactor is IP00, and the enclosure protection grade of the control circuit and auxiliary circuit is IP20;

5.7 Installed in a place where there is no severe shaking, shock and vibration without conductive dust and rain and snow invasion. The inclination between the mounting surface and the vertical surface is not greater than ±5°;

5.8 The applicable temperature range during transportation and storage is -25℃ to +55℃, and up to +70℃ in a short time (24h). The storage place should be ventilated and dry free from rain and snow invasion and direct sunlight.

TGCA (120~630A) Series AC Contactor

6 Main Circuit Parameters and Performance Indicators

Model			TGCA-120	TGCA-160	TGCA-185	TGCA-225
Rated working current (A)	220V/230V	AC-3	120	160	185	225
		AC-4			160	185
	380V/400V	AC-3	120	160	185	225
		AC-4			160	185
	660V/690V	AC-3	86	107	107	118
		AC-4				107
Conventional heating current (A)			200		275	
Rated insulation voltage (V)			1000			
Rated impulse withstand voltage (kV)			12			
Rated making capaicty			Rated making current: 10×Ie(AC-3) or 12×Ie(AC-4)			
Rated breaking capacity			Rated breaking current: 8×Ie(AC-3) or 10×Ie(AC-4)			
Rated limit short-circuit current Iq (kA)			50			
Power of controlled 3-phase motor (kW)		220V/230V	37	45	55	63
		380V/400V	55	75	90	110
		660V/690V	80	100	100	110
Electrical life ($\times 10^4$ times) 400V		AC-3	130		120	
		AC-4	1.5			1
Flashover distance (mm)		380V/400V	15			
		660V/690V	35			
Mechanical life (10,000 times)			1000			
Model and rated current of matched fuse			gG224		gG315	
Matched thermal overload relay			JRS2-135 Stand-alone installation	JRS2-180 Stand-alone installation		JRS2-400 Stand-alone installation
Coil power (50Hz)		Pull-in VA	500			
		Hold VA	50			
Action range		Pull-in voltage	(80% ~ 110%) Us			
		Release voltage	(20% ~ 75%) Us			

TGCA (120~630A) Series AC Contactor

Table, continued

型号			TGCA-265	TGCA-330	TGCA-400	TGCA-500	TGCA-630
Rated working current (A)	220V/230V	AC-3	265	330	400	500	630
		AC-4			330		500
	380V/400V	AC-3	265	330	400	500	630
		AC-4			330		500
	660V/690V	AC-3	170	235	303	353	400
		AC-4	137	170	235	303	353
Conventional heating current (A)			315	380	450	630	700
Rated insulation voltage (V)			1000				
Rated impulse withstand voltage (kV)			12				
Rated making capaicty			Rated making current: 10×Ie(AC-3) or 12×Ie(AC-4)				
Rated breaking capacity			Rated breaking current: 8×Ie(AC-3) or 10×Ie(AC-4)				
Rated limit short-circuit current Iq (kA)			50				
Power of controlled 3-phase motor (kW)		220V/230V	75	90	132	160	200
		380V/400V	132	160	200	250	335
		660V/690V	160	200	300	335	350
Electrical life ($\times 10^4$ times) 400V		AC-3	100			90	
		AC-4	1.2		1	0.6	
Flashover distance (mm)		380V/400V	15		20		
		660V/690V	35		40		
Mechanical life ($\times 10^3$ times)			600				
Model and rated current of matched fuse			gG400		gG500	gG630	gG800
Matched thermal overload relay			JRS2-400 Stand-alone installation			JRS2-630 Stand-alone installation	
Coil power (50Hz)		Pull-in VA	700			800	
		Hold VA	20			20	
Action range		Pull-in voltage	(75% ～ 110%)Us				
		Release voltage	(10% ～ 75%)Us				

TGCA (120~630A) Series AC Contactor

7 Accessories Installation Diagram

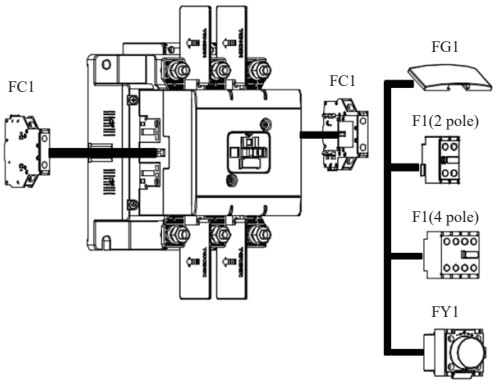

Code	Name
FC1	Side assist
F1	Top assist
FY1	Delay head
FG1	Dust cover
To be developed	Mechanical interlock

The standard insulation spacer coils of all specifications can satisfy the upper and lower wiring requirements for more convenient connection.

Conventional heating current Ith	10A
Rated insulation voltage Ui (V)	690
Control capacity of auxiliary contact	AC-15:1.6A /220V ,0.95A/380V; DC -13:0.15A/220V
Rated impulse withstand voltage Umip (kV)	6
Wiring capacity (N.m)	0.8(M3.5)

8 Outline and Installation Dimensions

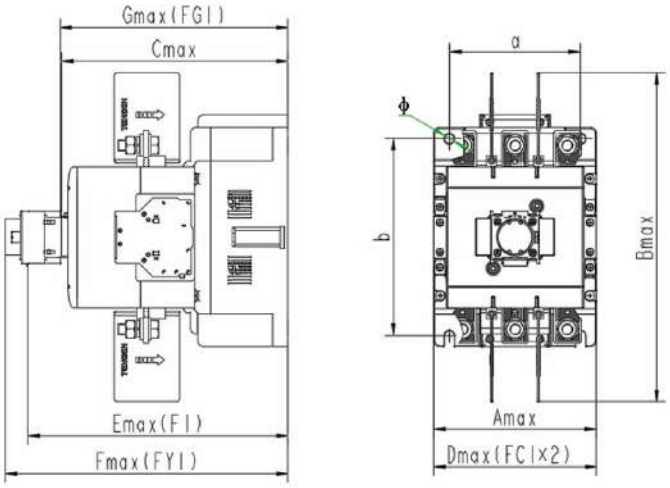

Unit: mm

Spec. & Model	Amax	Bmax	Cmax	Dmax	Emax	Fmax	Gmax	a	b	φ
TGCA-120 ~ 225	121	282	167	125	201	220	169	96±0.5	134±0.8	7
TGCA-265 ~ 400	150	300	208	151	241	261	210	120±0.5	180±0.8	9
TGCA-500 ~ 630	165	313	226	166	263	284	228	130±0.5	180±0.8	9

TGCA (120~630A) Series AC Contactor

9 Product Wiring Capacity

Product sepcification			TGCA-120~225	TGCA-265~400	TGCA-500~630
Main circuit	Copper wire	Qty.	1/2	1/2	1/2
		Sectional area mm^2	10 ~ 150	50 ~ 240	50 ~ 240
	Copper busbar	Qty.	2	2	2
		Size mm	25×3	30×5	40×5
	Fastening screw size and tightening torque N.m		M10 14N.m		
Control and auxiliary circuit	Non-prefabricated terminal soft (hard) wire	1 wire mm^2	1 ~ 4		
		2 wires mm^2	1 ~ 4		
	Prefabricated terminal	1 wire mm^2	1 ~ 4		
		2 wires mm^2	1 ~ 2.5		
	Fastening screw size and tightening torque N.m		M3.5 0.8N.m		

10 Electrical life curve

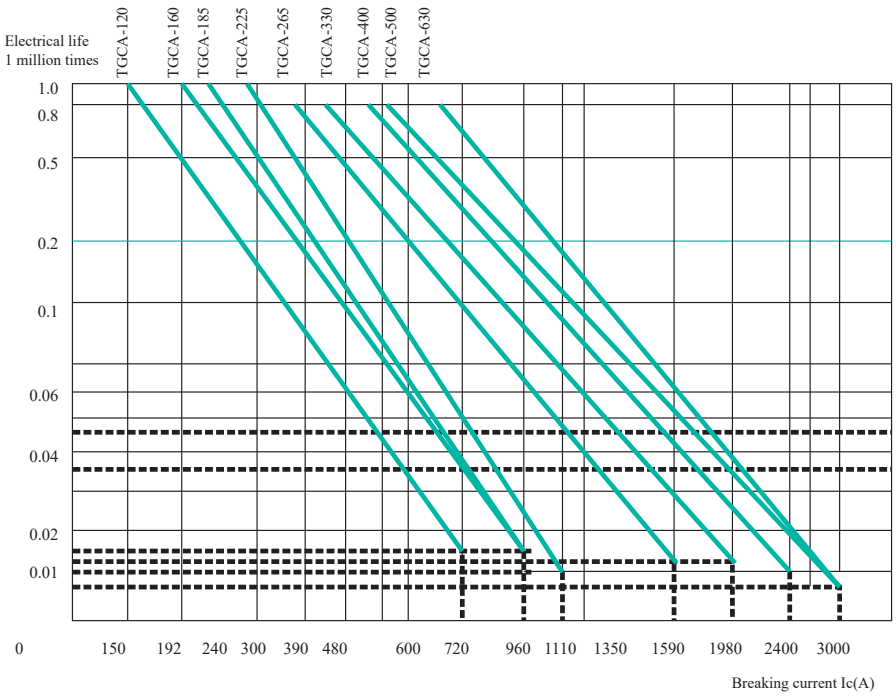

AC-4 Electrical life curve

TGC3 Series AC Contactor

1 Overview

TGC3 series AC contactor (hereinafter referred to as contactor) is the primarily used in the AC 50Hz (or 60Hz) power system with rated operating voltage up to 690V, rated operating voltage to 415V under the AC-3 use category, and rated operating current up to 38A for remote turn-on and turn-off of circuit, and it can form an electromagnetic starter together with an appropriate thermal relay to protect the circuit that may be overloaded.

The contactor is not used to cut off the short-circuit current, and an appropriate short-circuit protective device is provided during operation.

Standards: IEC/EN 60947-4-1;

IEC/EN 60947-5-1.

Certification: CE

Matching accessories: Top mounted F3, side mounted FC3, air delay head FY3, surge suppressor FR3, mechanical interlock FJ3, and electrical interlock FJ3e

Recommended applicable industries: Equipment with high requirements for the overall performance of the product such as consistency + electrical life + dust + noise as well as high-frequency operations, especially in the OEM fields such as elevators, lifting, machine tools, textiles, and air compressors.

2 Type Designation

TG C 3 - □ □ □

- General: By default; special function: "N" means reversible contactor
- Type and number of pairs of built-in aux. contact; that is, 11: 1NO+1NC; 20:2NO; 02:2NC;
- Rated operating current at 400V/415V under AC-3 usage category (A)
- Design code
- AC contactor
- Enterprise code

3 Main Technical Parameters

3.1 The main technical parameters and performance indicators of the contactor are listed in Table 1;

3.2 Rated control power voltage of TGC3 AC contactor coil, Us:
AC 24 /36/42/48/110/127/220/230/240/380/400/415/440 50/60Hz;

3.3 Enclosure protection grade IP20;

3.4 Coordination and cooperation of short-circuit protective device (SCPD): Rated limited short-circuit current Iq: 50kA; the model of matched protective device (SCPD) is listed in Table 1;

3.5 Coordination and cooperation type (protection type): "2" type;

Table 1

Model & Spec.		TCGC3-09	TCGC3-12	TCGC3-18	TCGC3-25	TCGC3-32	TCGC3-38
Rated operating current Ie(A)	AC-3(≤415V)	9	12	18	25	32	38
	AC-3e(≤415V)	9	12	18	25	32	38
	AC-1(≤415V)	25	25	32	40	50	50
Number of poles		3					
Rated insulation voltage Ui		690V					
Rated impulse withstand voltage Uimp		6KV					

TGC3 Series AC Contactor

Table 1 continued

Conventional free air thermal current Ith(AC-1)			25A	25A	32A	40A	50A	50A
Controllable three-phase squirrel cage motor power (AC-3/AC-3e) kW	220/240V		2.2	3	4	5.5	7.5	9
	400/415V		4	5.5	7.5	11	15	18.5
	660/690V		5.5	7.5	10	15	18.5	18.5
Motor power under intermittent periodic duty-type (AC-4) kW	220/240V		0.75	1.1	1.5	2.2	3	4
	400/415V		4	5.5	7.5	7.5	11	11
	660/690V		1.1	1.5	3	3.7	5.5	6
Electrical life million times	AC-3		200		160			140
Mechanical life million times			1500					
Operation frequency Times/h	Electrical life	AC-3	1200			1200	1000	1000
	Mechanical life		3600					
Short time withstand curren	1s		215	215	245	380	430	430
	10s		110	110	146	240	260	310
	1min		656	65	85	120	138	150
	10min		32	32	40	50	60	60
Rated making capacity (415V)	Comply with IEC60947 standard		Making current: 10×Ie(AC-3) or 12×Ie(AC-4)					
Rated breaking capacity (415V)	Comply with IEC60947 standard		Making and breaking current: 8×Ie (AC-3) or 10×Ie (AC-4)					
Model of SCPD matched fuse			RT16-00 20	RT16-00 25	RT16-00 32	RT16-00 40	RT16-00 50	RT16-00 63
Matched thermal overload relay			TGR3-38 (In development)					
Main circuit wiring capacity, mm^2	Without soft wire	1 piece	1...4		1.5...6	1.5...10	2.5...10	
	Terminal block	2 pcs	1...4		1.5...6	1.5...10	2.5...10	
	With soft wire	1 piece	1...4		1...6	1...6	1...10	
	Terminal block	2 pcs	1...2.		1...4	1...4	1.5...6	
	Without hard wire	1 piece	1...4		1.5...6	1.5...6	1.5...10	
	Terminal block	2 pcs	1...4		1.5...6	1.5...6	2.5...10	
	Tightening torque N.m		1.7			2.5		
Control coil parameters	Power	Pull-in VA	70					
		Hold VA	9					
	Operation range		Pull-in voltage: 85%Us~110%Us; 70%~110%Us (installation angle≤±5°, except for 24V); The release voltage is: 20%Us~75%Us					
	Operation time	Making	Power-on of the coil to the turn-on of main circuit: 12 ~ 25 ms; (NO and NC non-overlap time: 3 ms					
		Breaking	Power-off of the coil to the turn-off of main circuit : 5 ~ 26 ms					
Aux. contact parameters								
Min. switching capacity	Umin(V)		17					
	Imin(mA)		5					
Rated control capacity AC-15	Rated operating voltage Ue(V)		220	380				
	Rated operating current Ie(A)		1.6	0.95				
Rated control capacity AC-13	Rated operating voltage Ue(V)		220					
	Rated operating current Ie(A)		0.15					

TGC3 Series AC Contactor

Table 1 continued

Rated insulation voltage Ui	V		690
Conventional thermal current Ith	A		10
Rated withstand impulse voltage Uimp	kV		6
Rated limited short-circuit current	Matched SCPD model		RT16-00 10
Short time withstand current		100ms	140A
		500ms	120A
		1s	100A
Cable connection mm^2	Soft wire without cold-pressed terminal	1 piece	1~4
		2 pcs	
	Soft wire with cold-pressed terminal	1 piece	1~4
		2 pcs	1~2.5
	Hard wire	1 piece	1~4
		2 pcs	
Size of tightening screw			M3.5
Tightening torque N.m			0.8

4 Structural Features

4.1 The contactor is primarily composed of arc extinguishing system, contact system, base, and magnetic system (including iron core and coil).

4.2 The contactor has the characteristics of small size, light weight, low power consumption, long life, safety and reliability.

4.3 The F3 top-mounted aux. contact set, FC3 side-mounted aux. contact set, and FY3 air delay head can be installed in the building block installation mode, and it can also be combined with thermal relays to form a variety of derivative products.

TGC3 Series AC Contactor

5 Electrical Wiring Diagram

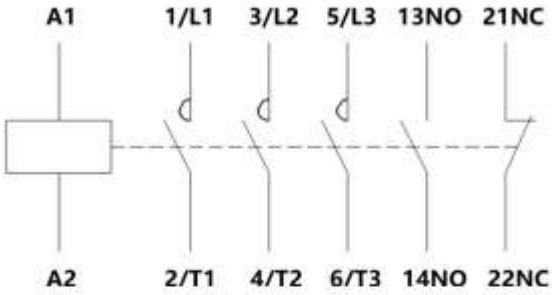

Fig. 1 TGC3-0911~3811

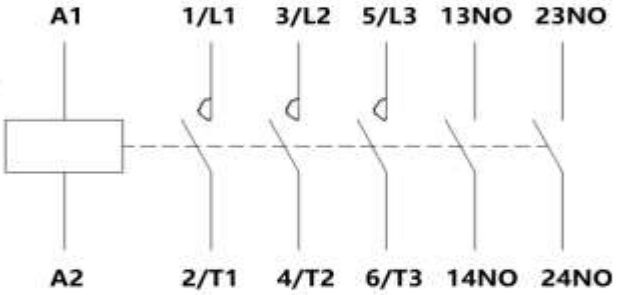

Fig. 2 TGC3-0920~3820

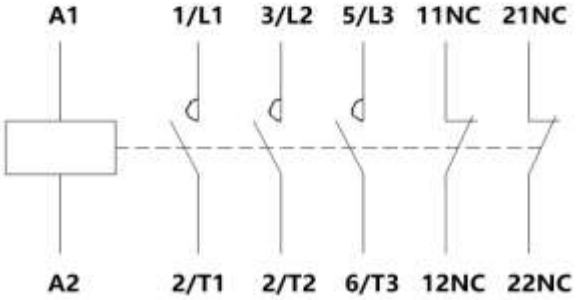

Fig. 3 TGC3-0902~3802

TGC3 Series AC Contactor

6 Star-Delta Start Scheme

6.1 Start-delta start contactor model selection scheme

Table 2 Start-delta start contactor model selection scheme

P(kW)	In(A)	IrD(A)	Linear connection method of contactor KM2	Delta connection method of contactor KM3	Star connection method of contactor KM1
1.5	3.5	2	TGC3-09	TGC3-09	TGC3-09
2.2	5	3	TGC3-09	TGC3-09	TGC3-09
3	6.6	4	TGC3-09	TGC3-09	TGC3-09
4	8.5	5	TGC3-09	TGC3-09	TGC3-09
5.5	11.5	6	TGC3-09	TGC3-09	TGC3-09
7.5	15.5	9	TGC3-12	TGC3-12	TGC3-09
9	18.5	11	TGC3-18	TGC3-18	TGC3-09
11	22	13	TGC3-18	TGC3-18	TGC3-09
15	30	16	TGC3-25	TGC3-25	TGC3-12
18.5	37	22	TGC3-25	TGC3-25	TGC3-18
22	44	26	TGC3-32	TGC3-32	TGC3-18
30	60	35	TGC3-38	TGC3-38	TGC3-25

6.2 Start-delta scheme electrical wiring diagram

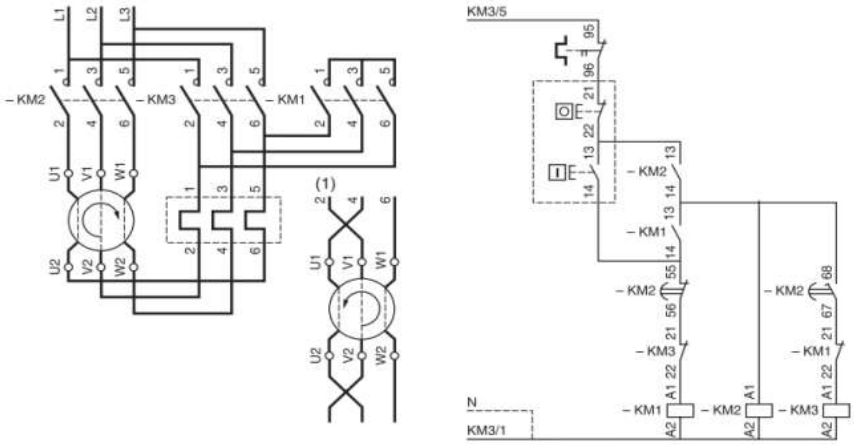

Fig. 4 TGC3 series start-delta scheme electrical wiring diagram

TGC3 Series AC Contactor

7 Operating Conditions

7.1 Ambient temperature (around the equipment): Standard operating temperature: -25°C~+60°C; Storage temperature: -60°C~+80C;
7.2 Altitude: No more than 3000m;
7.3 Atmospheric conditions: The relative humidity of the air does not exceed 50% when the maximum temperature is +40°C, and a higher relative humidity can be allowed at a lower temperature, such as 90% at 20°C. Special measures shall be taken for condensations occurred occasionally due to temperature changes;
7.4 Pollution degree: Level 3;
7.5 Installation category: Class III;
7.6 Installation conditions: Horizontal installation; vertical installation; the inclination between the mounting surface and the vertical plane is ≤±30°;
7.7 Installation method: Screw installation or TH35 mm rail installation;
7.8 Impact resistance 1/2 sine wave = 11ms:
Contactor opened: 09~18A 10gn; 25 ~38A 8gn; Contactor Closed: 09~ 38A15gn;
7.9 Vibration resistance 5... 300 Hz: Contactor opened: 09~ 38A 2gn; Contactor Closed: 09~38A 4gn;

8 Product Outline and Installation Dimensions

The outline and installation dimensions of the product are illustrated in Fig. 5 ~ Fig 6 and Table 3 and Table 4.

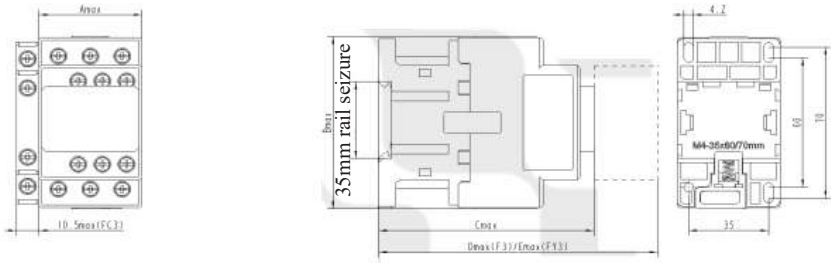

Fig.5 TGC3-09~38 outline and installation dimensions

Table 3 (mm)

Model & Spec.	Amax	Bmax	Cmax	Dmax	Emax
TGC3-09~18	45.5	80	95.5	126.5	147
TGC3-09~38	45.5	86	99	130.5	151

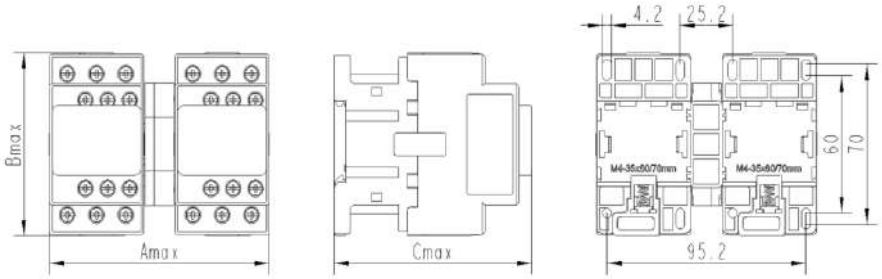

Fig.6 TGC3-09~38N outline and installation dimensions

Table 4 (mm)

Model & Spec.	Amax	Bmax	Cmax
TGC3-09~18N	106	80	95.5
TGC3-25~38N	106	86	99

TGC3 Series AC Contactor

9 Working Position

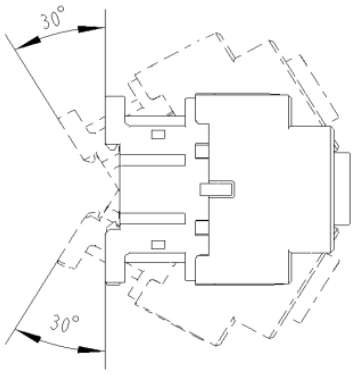

Fig. 7 Installation angle:

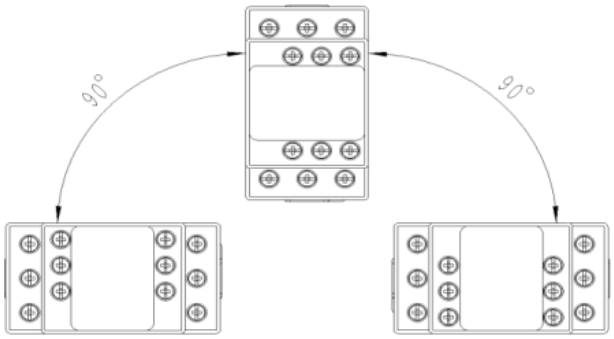

Fig. 8 Installation method: Horizontal or Vertical

10 Accessories Installation Diagram

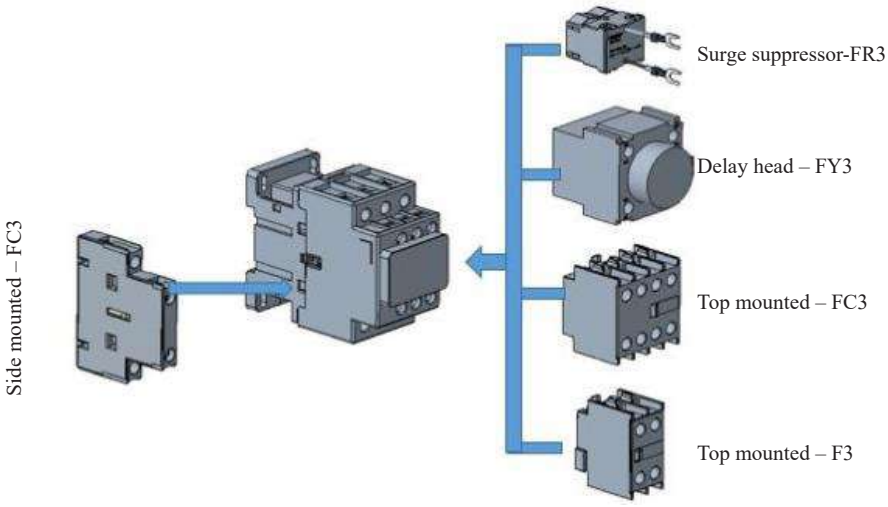

Note: Reversible product is equipped with a mechanical interlock when delivery.

Fig. 9 Accessories installation diagram

TGC3 Series AC Contactor

11 Accessories Parameters and Model Selection

11.1 Aux. contact parameters

Aux. contact set F3/FC3

F C 3 - 22

- 22: Contact type
  2 sets: 11, 20, 02
  4 sets: 22, 40, 04, 31, 13 (only applicable to top aux.)
- 3: Design No.
- C: Aux. contact
  Default: Top aux. C: Side aux.
- F: Accessory code

Aux. contact parameters

Installation location	Number of poles	Contact layout	Contact form	Available product	Material description
Top	2	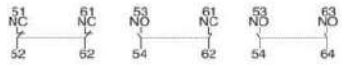	1NO+1NC	TGC3-09~38	F3-11
			2NO+0NC		F3-20
			0NO+2NC		F3-0
	4	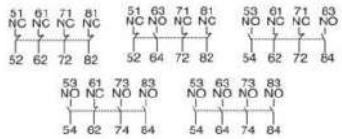	2NO+2NC		F3-22
			4NO+0NC		F3-40
			0NO+4NC		F3-04
			3NO+1NC		F3-31
			1NO+INC		F3-13
Side	2	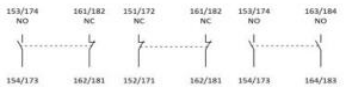	1NO+1NC	TGC3-09~38	FC3-11
			2NO+0NC		FC3-20
			0NO+2NC		FC3-02

Matched contact module

Contactor	Instantaneous aux. contact module		
Model	Front mounted		Side mounted
	2 poles	4 poles	2 poles

11.2 Air delay head parameters

F Y 3 - K T 3

- 3: Delay Range:
  3:01~3s 30:01~30s180:10~180s
- T: Delay type:
  T: Power-on delay
  D: Power-off delay
- K: Air delay head
- 3: Design No.
- Y: Delay module
- F: Accessory code

TGC3 Series AC Contactor

Air delay head parameter FY3

Installation location	Delay type	Wiring diagram	Delay range	Available product	Material description
Top	Power-on delay	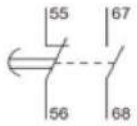	0.1~3s	TGC3-09~38	FY3-KT3
			0.1~30s		FY3-KT30
			10-180s		FY3-KT180
	Power-off delay	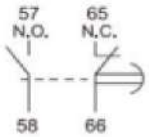	0.1~3s		FY3-KD3
			0.1~30s		FY3-KD30
			10-180s		FY3-KD180

The waiting time between the opening of the N/C contacts and the closing of the N/O contacts is 40ms±15ms.

11.3 Surge suppressor parameter FR3

F R 3 - 48

- 48: Protection voltage range:
  48: 24...-48V
  127: 93…127V
  240: 187…240V
  440: 323…440V
- 3: Design No.
- R: Surge suppression module
- F: Accessory code

Product features:

1. To effectively protect circuits that are sensitive to "high-frequency" interference. It is used for sinusoidal voltage waveforms when the total harmonic distortion is less than 5%.
2. High energy absorption, reduce the peak value of surge voltage, and effectively reduce high-frequency waves.
3. The opening time is slightly increased (1.2 to 2 times the normal time).

Product model	Voltage protection range	Max. peak voltage	Available product	Installation location	Material description
FR3-48	AC 24-48V	150V	TGC3-09-38	Top (both ends of contactor coil)	FR3-48 24-48V
FR3-127	AC 93-127V	3Uc			FR3-127 93-127V
FR3-240	AC 187-240V	3Uc			FR3-240 187-240V
FR3-440	AV 323-440V	3Uc			FR3-440 323-440V

TGC3 Series AC Contactor

12 Installation, Operation, and Maintenance

12.1 Before installation, check the product for intact or damage, and confirm that the technical parameters of the product are consistent with the actual requirements, such as coil voltage, and rated current;

12.2 When installation, please install the product according to the specified installation conditions, and the A1 symbol marked on the wiring terminal of the coil should face upwards in line with the people's visual habits;

12.3 When connecting the wire, please check the marks on the terminal block: 1L1, 3L2, and 5L3 are the main circuit inlet ends, 2T1, 4T2, and 6T3 are the main circuit outlet ends. NC is the normally closed auxiliary terminal, and NO is the normally open auxiliary terminal;

12.4 When installation and wiring connection, the tightening torques of the screws of the inlet and outlet terminal are 1.7 N.m for TGC3-09 ~18, and 2.5 N.m for TGC3-25~38;

12.5 The wiring screws should be tightened firmly; after the wiring is connected properly, please apply the rated control power voltage onto the coil when the main contact is not energized, and power on/off the coil several times;

12.6 After checking that the coil works normally through the test, it can be put into operation;

12.7 If any abnormal noise is found during operation, the moving mechanism may be blocked, or there is dirt on the polar surface of iron core. Please eliminate the faults before use;

12.8 As the temperature of the contactor coil and iron core is high and it can be up to 130°C, do not touch it with your hands during operation.

13 Accessories Installation

The installation and disassembly method of dust cover is illustrated in Fig. 10 and Fig. 11 below:

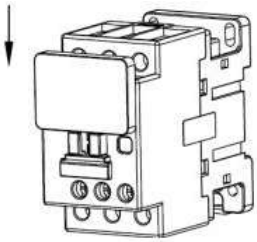

Fig. 10 Dust cover installation method

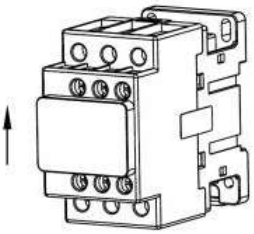

Fig. 11 Dust cover disassembly method

The installation and disassembly methods of the top mounted accessories (F3 top mounted aux. and FY3 air delay head) are illustrated in Fig. 12 and Fig. 13 below:

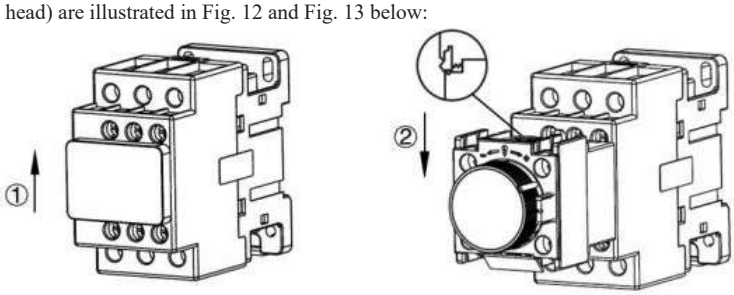

Fig. 12 Installation method of F3 top mounted aux. and FY3 air delay head

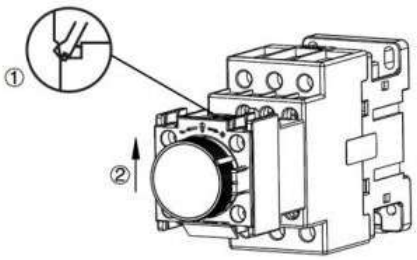

Fig. 13 Disassembly method of F3 top mounted aux. and FY3 air delay head

TGC3 Series AC Contactor

The installation and disassembly methods of the FC3 side mounted aux. contact of the side mounted accessory are illustrated in Fig. 14 and Fig. 15 below:

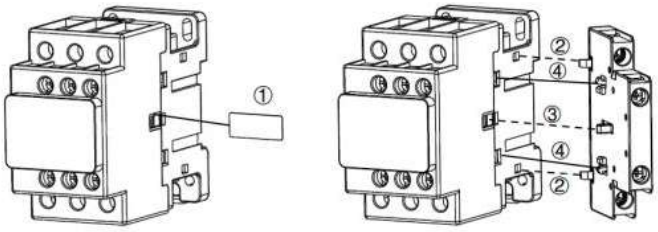

Fig. 14 Installation method of FC3 side mounted aux. contact

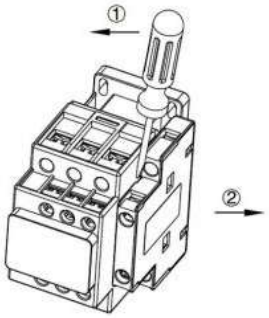

Fig. 15 Disassembly method of FC3 side mounted aux. contact

The installation methods of the mechanical interlock FJ3 and mechanical and electrical interlock FJ3E are illustrated in Fig. 16 below:

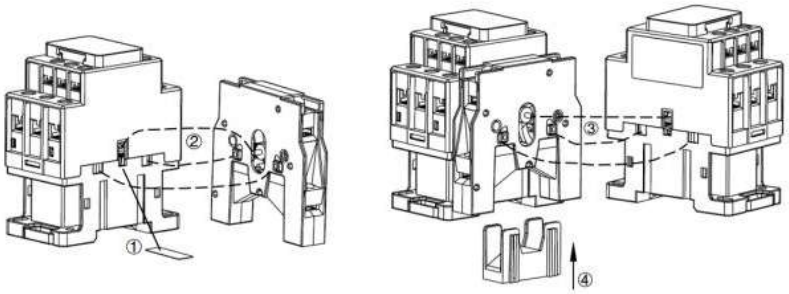

Fig. 16 Installation method of mechanical interlock FJ3 and mechanical and electrical interlock FJ3E

The installation and disassembly methods of the standard rail are illustrated in Fig. 17 and Fig. 18 below:

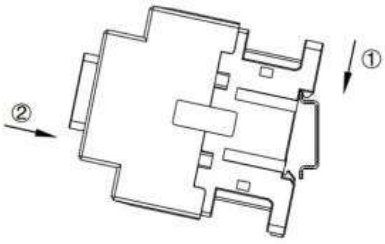

Fig. 17 Installation method

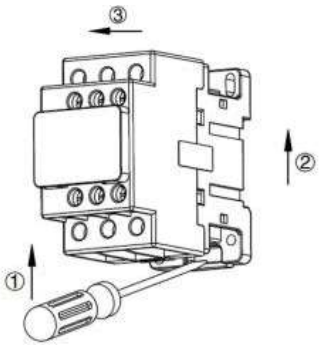

Fig. 18 Disassembly method

TGC3 Series AC Contactor

14 Storage Method

The storage temperature is -60C°C~-+80°C, and the product should not be exposed to rain and snow and direct sunlight. The product shall be stored in the well ventilated and dried places, and those with their storage periods expired must be rechecked. For quality problems due to improper storage or failure to recheck after the storage period expires, the relevant quality regulations are available.

15 Warranty Period

The warranty period of the contactor is 24 months from the date of production (see product certificate or production batch number).

16 Ordering Notice

16.1 When ordering, please specify the complete name, model, and specification of the contactor, including the requirements for aux. contact;
16.2 Rated control power voltage and frequency of the coil;
16.3 To order F3 top-mounted aux. contact set, FC3 side-mounted aux. contact set, and FY3 air delay head separately, please specify them.
16.4 The contactor derivability N is a reversible wiring method, and the special wiring method must be indicated;
16.5 Number of units;
16.6 Order example: TGC3-0911 AC contactor; coil voltage 220V 50/60Hz 10 units;
F3-1110 10 units

17 Environmental Protection

In order to protect the environment, the scrapped product or its scrapped parts shall be disposed properly as industrial waste, or delivered to the recycling station for classification, disassembly, and recycling and reuse according to the relevant national regulations.

TGC1-N Series Reversing Contactor

1 Overview

TGC1-N series reversing contactors (hereinafter referred to as contactors) feature with exquisite appearance and small shape, mainly used in AC 50Hz (or 60Hz) power system with a rated operating voltage up to 690V, with a rated operating voltage of 380V under AC-4 use category, and with a rated current up to 44A for power-on and power-off of circuit remotely, and can be combined with the appropriate thermal relay to form an electromagnetic starter for protection of circuit that overload may occur. The contactor is suitable for frequent start and control of AC motor.

This product complies with standard IEC 60947-4-1.

2 Type Designation

2.1 Model description

TGC1 - 18 10 N

- N — Function code
  - N: reversing contactors
- 10 — Auxiliary contact type
  - 10: 1NO+0NC (for 06~38A)
  - 01: 0NO+1NC (for 06~38A)
  - 11: 1NO+1NC (for 09~95A)
- 18 — Rated current
  - 06: 06A 09: 09A 12: 12A 18: 18A
  - 25: 25A 32: 32A 38: 38A 40: 40A
  - 50: 50A 65: 65A 80: 80A 95: 95A
- TGC1 — Contactor model

2.2 Mechanical and electrical interlock FJ1

F J 1 - 06 E

- E — Specification
  - L: Mechanical interlock
  - E: Mechanical and electrical interlock
- 06 — Frame current:
  - 6: 06A 38: 38A
  - 95: 95A
- 1 — Design code.
- J — J: Mechanical interlock
- F — F: Accessory code

Installation location	Interlock method	Available product	Material description	Auxiliary specification for product
Side	Mechanical interlock	TGC1-06	FJ1-06L	
		TGC1-09~38	FJ1-38L	1NO+1NC
	Mechanical + electrical interlock	TGC1-09~38	FJ1-38E	1NO+1NC
		TGC1-40~95	FJ1-95E	

TGC1-N Series Reversing Contactor

2.3 TGC1-N Reversing contactor model table

Motor Power	Rated current	Auxiliary contact		Item Description
Pe(kW AC-4,380V)	Ie（A）	Normal open NO	Normal closed NC	
1.1	2.6	1	-	TGC1-0610N*
		-	1	TGC1-0601N*
1.5	3.5	1	-	TGC1-0910N*
		-	1	TGC1-0901N*
		1	1	TGC1-0911N*
2.2	5	1	-	TGC1-1210N*
		-	1	TGC1-1201N*
		1	1	TGC1-1211N*
3.3	7.7	1	-	TGC1-1810N*
		-	1	TGC1-1801N*
		1	1	TGC1-1811N*
4	8.5	1	-	TGC1-2510N*
		-	1	TGC1-2501N*
		1	1	TGC1-2511N*
5.4	12	1	-	TGC1-3210N*
		-	1	TGC1-3201N*
		1	1	TGC1-3211N*
5.5	14	1	-	TGC1-3810N*
		-	1	TGC1-3801N*
		1	1	TGC1-3811N*
7.5	18.5	1	1	TGC1-4011N*
11	24	1	1	TGC1-5011N*
15	28	1	1	TGC1-6511N*
18.5	37	1	1	TGC1-8011N*
22	44	1	1	TGC1-9511N*

3 Technical Parameters

3.1 TGC1-N reversing contactor parameters table

Contact model	Rated insulation voltage	Rated operating voltage	Resistive current	Intermittent work cycle	
	Ui（V）	Ue（V）	Ith（A）	Ie（A）	Pe（kW）
TGC1-06N	690	380	16	2.6	1.1
		660		1	0.75
TGC1-09N	690	380	20	3.5	1.5
		660		1.5	1.1
TGC1-12N	690	380	20	5	2.2
		660		2	1.5
TGC1-18N	690	380	25	7.7	3.3
		660		3.8	3

TGC1-N Series Reversing Contactor

Continued table

TGC1-25N	690	380	32	8.5	4
		660		4.4	3.7
TGC1-32N	690	380	40	12	5.4
		660		7.5	5.5
TGC1-38N	690	380	40	14	5.5
		660		8.9	6
TGC1-40N	690	380	50	18.5	7.5
		660		9	7.5
TGC1-50N	690	380	60	24	11
		660		12	10
TGC1-65N	690	380	80	28	15
		660		14	11
TGC1-80N	690	380	110	37	18.5
		660		17.3	15
TGC1-95N	690	380	110	44	22
		660		21.3	18.5

3.3 Coil voltage specification table

Coil voltage	V	24	36	48	110	220	380	400	415
Coil voltage code	50Hz	B5	C5	E5	F5	M5	Q5	V5	N5
	50/60Hz	B7	C7	E7	F7	M7	Q7	V7	N7

4 Operating Conditions

4.1 Ambient temperature (around the equipment): Allowable working temperature: -35℃~+70℃; normal working temperature: -5℃~+40℃; when the working environment temperature is higher than +40℃, by considering that the allowable limit temperature rise of the product will be reduced, the rated working current must be reduced (the derating coefficient sees table below), and the quantity of the contactors mounted in the standard assembly shall be decreased, otherwise the product may be damaged, the service life may be shortened, and the working reliability may be reduced, and furthermore the product action range may be affected; when the working environment temperature is lower than -5℃, considering that the insulation and lubrication grease may be congealed at too low ambient temperature resulting in product action failure, please contact the manufacturer and user for design or use.

Ambient temperature ℃	40	50	55	60	65	70
Correction factor	1	0.98	0.95	0.93	0.875	0.75

4.2 Installation conditions: The inclination between the mounting surface and the vertical surface is not more than ±22.5℃, and the installation category is Class III;

4.3 Pollution degree: 3

4.4 Altitude: Not more than 2,000 meters

4.5 Atmospheric conditions: When the maximum temperature is +70℃, the relative humidity of the air does not exceed 50%. Higher relative humidity is allowed at lower temperatures, for example, up to 90% at 20℃. Special measures should be taken for condensation occurred occasionally due to temperature changes;

4.6 The product should be installed and used in a place where there is no obvious shaking, impact and vibration.

TGC1-N Series Reversing Contactor

5 Outline and Installation Dimensions

5.1 TGC1-06N~38N

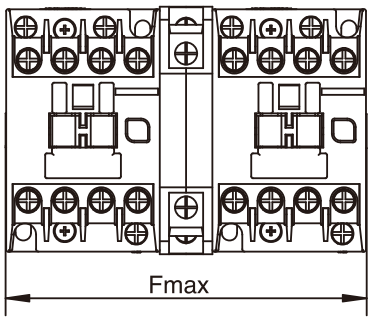

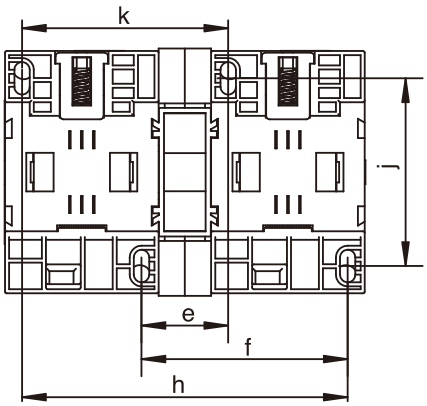

Unit: mm

Spec. & Model	Fmax	e	f	h	j	k
TGC1-06N	105	25	60	95	50/60	60
TGC1-09N~18N	106	25	60	95	50/60	60
TGC1-25N~38N	129	31.5	71	111.5	50/60	71

5.2 TGC1-40N~95N

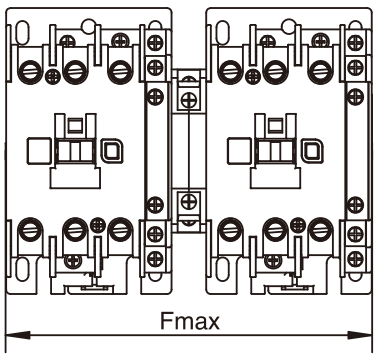

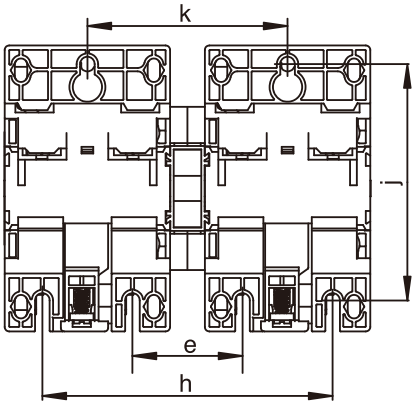

Unit: mm

Spec. & Model	Fmax	e	f	h	j	k
TGC1-40N~65N	163	50	-	130	100/110	90
TGC1-80N~95N	186	60	-	140	100/110	100

TGCC1 Series Capacitor Switching Contactors

1 Overview

TGCC1 Series Capacitor Switching Contactors (hereinafter referred to as contactor) is mainly used in AC 50Hz (or 60Hz) power system with a rated operating voltage up to 690V and with a controllable container capacity up to 50kvar under the AC-6b use category to power on and power off the parallel capacitor for improving the power factor.

This product complies with standard IEC 60947-4-1.

2 Type Designation

2.1 Model description

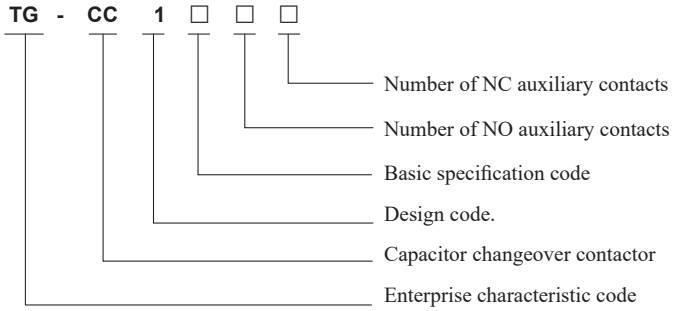

2.2 TGCC1 capacitor switching contactor model table

Spec.	Auxiliary contact		Contact mark
	NO Normal Open	NC Normal Closed	
TGCC1-25、32、43/11	1	1	13,14;31,32
TGCC1-25、32、43/20	2	-	13,14;33,34
TGCC1-25、32、43/02	-	2	21,22;31,32
TGCC1-63/21	2	1	13,14;33,34;21,22
TGCC1-63/12	1	2	13,14;21,22;31,32
TGCC1-95/21	2	1	13,14;33,34;21,22
TGCC1-95/12	1	2	13,14;21,22;31,32
TGCC1-115/21	2	1	13,14;33,34;21,22
TGCC1-115/12	1	2	13,14;21,22;31,32

TGCC1 Series Capacitor Switching Contactors

3 Technical Parameters

Operating characteristics:
Pull-in voltage: 85% Us ~ 110% Us;
Release voltage: 20% Us ~ 75% Us;
Rated control power voltage of coil, Us:
AC: (50Hz) 110V, 220V, 380V, 400V, 415V; (50Hz/60 Hz) 110V, 220V, 380V, 400V, 415V;

Model			TGCC1-25	TGCC1-32	TGCC1-43	TGCC1-63	TGCC1-95	TGCC1-115
Rated insulation voltage Ui (V)			690					
Rated withstand impulse voltage Ui (kV)			6					
Rated working current (AC-6b) Ie (V)			17	23	29	43	73	87
Rated working voltage Ue (V)			220V/230V、380V/400V、660V/690V					
Controllable capacitor capacity Qe kvar	220V/230V		7	10	15	20	35	35
	380V/400V		12	20	25	35	50	60
	660V/690V		18	26	36	48	92	92
Inrush current suppression capacity			20Ie					
Operating frequency Times / h			300				120	
Electrical life (10,000 times)			15				12	
Mechanical life (10,000 times)			100					
AC coil power	50Hz	Pull-in (VA)	70			200	250	
		Hold (VA)	6 ～ 8			13 ～ 20	23 ～ 30	
	Power (W)		1 ～ 3			4 ～ 8	6 ～ 10	
Auxiliary contact			AC-15:360VA DC-13:33W Ith:10A					

4 Operating Conditions

4.1 Ambient temperature: Working temperature limit: -35°C~+70°C; normal working temperature: -5°C~+40°C; the average value within 24 hours does not exceed +35°C;

4.2 Installation conditions: The inclination between the mounting surface and the vertical surface is not greater than ±22.5°C, and the installation category is Class III;

4.3 Pollution degree: 3

4.4 Altitude: Not more than 2,000 meters

4.5 Atmospheric conditions: When the maximum temperature is +70°C, the relative humidity of the air does not exceed 50%. Higher relative humidity is allowed at lower temperatures; for example, up to 90% at 20°C. Special measures should be taken for condensations occurred occasionally due to temperature changes;

4.6 The product should be installed and used in a place where there is no obvious shaking, impact or vibration.

TGCC1 Series Capacitor Switching Contactors

5 Outline and Installation Dimensions

5.1 Contactor outline and installation dimensions

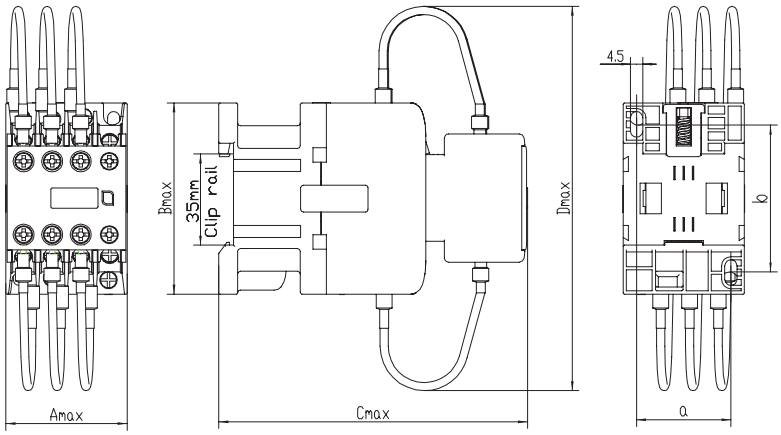

TGCC1-25 ~ 43 Contactor outline and installation dimensions

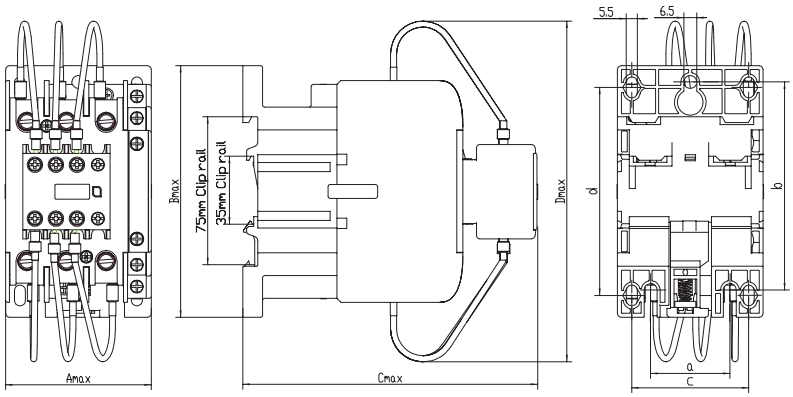

TGCC1-63 ~ 115 contactor outline and installation dimensions

Unit: mm

Model	Amax	Bmax	Cmax	Dmax	a	b	c	d
TGCC1-25	45	71	115	153	35	50/60	-	-
TGCC1-32	56	82.5	129	158	35	48.2/73.5	-	-
TGCC1-43	56	82.5	129	158	40	48.2/73.5	-	-
TGCC1-63	73.5	127	149	196	40	100/110	59	100/110
TGCC1-95/115	84.5	126.5	155	240	40	100/110	64	102/111

It is recommended to select SCPD and its fuse model according to type 1 coordinated protection

Model & Spec.	TGCC1-25	TGCC1-32	TGCC1-43	TGCC1-63	TGCC1-95	TGCC1-115
Coordinated by main circuit Fuse model	RT16-00 25A	RT16-00 40A	RT16-00 50A	RT16-00 80A	RT16-00 125A	RT16-00 125A
Coordinated by auxiliary circuit Fuse model	RT16-00 10A					

TGCC1 Series Capacitor Switching Contactors

5.2 Recommended wire cross-section and tightening torque of the terminal

Model & Spec.		TGCC1-25	TGCC1-32	TGCC1-43	TGCC1-63	TGCC1-95/115
Coordinated by main circuit						
Flexible wire without terminal mm^2	1 wire		1-4	1.5-10	4-25	6-50
	2 wires		1-4	1.5-6	4-16	6-25
Flexible wire with terminal mm^2	1 wire		1-4	1-6	4-25	6-50
	2 wires		1-2.5	1-4	4-10	6-16
Hard wire without terminal mm^2	1 wire		1-4	1.5-6	4-25	6-50
	2 wires		1-4	1.5-6	4-10	6-25
Tightening torque N.m			1.2	1.8	5	9
Control and auxiliary circuit wiring						
Flexible wire without terminal mm^2	1 wire		1-4			
	2 wires					
Flexible wire with terminal mm^2	1 wire		1-2.5			
	2 wires					
Hard wire without terminal mm^2	1 wire		1-4			
	2 wires					
Tightening torque N.m			1.2			

6 Structure Features

6.1 The contactor is a direct-acting double break point, and the contact system is arranged in two upper and lower layers, and there are three pairs of current limiting resistances on the upper layer to form an inrush current suppression device. After power-on, the contactor is first powered on and then the work contact is powered on after a few milliseconds, and permanent magnet in the current-limiting contact is released under the reaction of the spring to disconnect the current-limiting resistance allowing that the capacitor works normally.

6.2 The contactor features with small size, light weight, low power consumption, long life, safety, and reliability.

6.3 In addition to the mounting screws, TGCC1-25 ~ 43 can be mounted with 35mm standard rails, and TGCC1-63 ~ 115 can be installed with 35mm or 75mm standard rails.

7 Installation, operation and maintenance

7.1 Before installation, check whether the technical data (such as rated voltage and rated current) on the coil is consistent with the power supply. Please note that the two wiring marks A2 at different terminal indicate the same contact, and A1 and any of A2s can be selected when wiring.

7.2 The installation shall comply with the specified installation conditions, and the wiring terminal A1 of the coil shall face upwards in line with human visual habits. If multi-stranded wires are used when wiring TGCC1-63~115 products, a wiring terminal shall be provided.

7.3 Note the terminal marks when wiring: 1/L1, 3/L2, and 5/L3 are main circuit incoming terminals, and 2/T1, 4/T2, and 6/T3 are main circuit outgoing terminals; 21, 22 and 31, 32 are normal closed auxiliary terminals, and 13, 14 and 33, 34 are normal open auxiliary terminals.

7.4 After installation, the resistance wires between the phases must be separately if tangled, and arranged to prevent the terminal from breakage.

7.5 Tighten the wiring screws. After check that the wiring is correct, power on and off the coil with rated control power voltage several times with non-live main contact. The product can be put into operation only after all test actions are correct.

7.6 When the capacitor is closing, if the inrush current is too large out of the suppression capacity of this contactor, the resistance may be burned out. At this time, the resistance can be replaced for further use.

7.7 For electrical device selected in the electric discharge device used in the reactive power compensation equipment, the insulation voltage shall be greater than 1.414Ue (that is, square root of 2 times Ue) to prevent damage to the contactor due to the failure of electric discharge device.
7.8 Please note that this contactor cannot be used for jogging, otherwise the resistance wire will burn out.
7.9 Please tighten the terminals regularly and remove the deposited dust from the contactor.
7.10 No other objects fall into the product.

8 Ordering Notice

8.1 Please specify the following contents when ordering:
Complete name and model of contactor.
Rated control power voltage and frequency of the coil.
Order quantity.

8.2 Order example:
TGCC1-2511 capacitor switching contactor coil voltage 220V 50Hz 10 sets.

CJX2(F)-C Series AC Contactor(AC-1)

1 Overview

CJX2 (F)-C series AC contactor (for AC-1) (hereinafter referred to as contactor) is mainly used in the AC 50Hz (or 60Hz) application with the rated insulation voltage 690V ~ 1250V, and with the rated operating current 80A to 750A at the rated operating voltage 690V under the AC-1 use category primarily for remotely powering on and powering off the circuit, suitable for new energy industries such as charging piles.
The contactor is different from the breaking short-circuit current, so an appropriate short circuit protection appliance is required.
Standard: IEC 60947-4-1

2 Type Designation

CJX 2 □ – □ □ □

- Derived code: N means reversible contactor,
  Z means DC operated contactor (us is DC)
  C means AC-1 special contactor
- Number of poles of main circuit of contactor:
  Default (blank) - 3 poles, 4 - 4 poles
- Product specifications (indicated by the rated operating current value at the rated operation voltage 380V)
- Series code: Bye default: 250 or below
  F: 320 and above
- Design No.
- AC contactor

Note: For different current specifications, the coil voltage range is slightly different, and the specific 3.2 coil voltage US table shall prevail;
Only the 320C has a 4 poles product.

CJX2(F)-C Series AC Contactor(AC-1)

3 Main Technical Parameters

3.1 Key parameters of main circuit

Model	Rated insulation voltage Ui(V)	Resistive current of free air (A)	Max. rated operating voltage(V)	Rated operating current AC-1(A)	Operating frequency AC-1 time / hour	Model & Spec. of matched fuse
CJX2-80C	1000	80	1000	80	300	RT16-00/100A
CJX2-150C	1140	150	1140	150	300	RT16-00/160A
CJX2-200C	1140	200	1140	200	300	RT16-00/200A
CJX2-250C	1140	250	1140	250	300	RT16-00/250A
CJX2F-320C	1000	320	690	320	1200	RT16-2/400A
CJX2F-375C	1000	375	690	375	1200	RT16-2/400A
CJX2F-400C	1250	400	690	400	600	RT16-3/450A
CJX2F-500C	1250	500	690	500	600	RT16-3/500A
CJX2F-670C	1250	670	690	670	600	RT17/800A
CJX2F-750C	1250	750	1140	750	600	RT17/800A
Pull-in voltage range	85%Us ～ 115%Us					
Release voltage range	20%Us ~ 75%Us (AC) ; 10%Us ~ 70%Us (DC)					

3.2 Coil volage Us

Model	CJX2-80C	CJX2-150C、200C、250C	CJX2F-320C	CJX2F-375C	CJX2F-400C、500C	CJX2F-670C	CJX2F-750C
Rated control voltage Us / (V)	AC：24/36/48/110/127/220/380V/(50Hz,50/60Hz) DC：24/48/110/220V	AC: 24V/36V/48V/(110/120)V/(220/230)V/(380/400)V/(50/60)Hz	AC：(110V/115V)/(220V/230V)/(380V/400V)/50Hz,50/60Hz DC：110V/220V		AC：(110V/115V)/(220V/230V)/(380V/400V)/50/60Hz DC：110V/220V		

3.3 Operation conditions

Within the ambient air temperature -5℃ ~ +40℃ range, apply the control power voltage Us onto the contactor sucking coil until it is heated to the stable state, and the contact can be closed reliably within the (85% ~ 110%) Us; its release AC voltage is (20%~75%)Us, and DC voltage is (10%~70%)Us.

3.4 Core parameters of aux. circuit

Aux. contact	Resistive current (Ith) A	10
	Rated operating voltage (Ue)V and rated operating current (Ie)A	380V/0.95A (AC-15) 220V/0.15A (DC-13)
	Rated control capacity	360VA (AC-15) or 33W (DC-13)
	Electrical life (10,000 times)	100
	Mechanical life (10,000 times)	1000
	Switchable min. load	6V / 10mA

CJX2(F)-C Series AC Contactor(AC-1)

4 Normal working and installation conditions

4.1 Normal working temperature is: -40℃ ~ +70℃, and the extreme high temperature within 24 hours does not exceed +70℃.

4.2 Altitude: not more than 3000m.

4.3 Atmospheric conditions: the relative humidity of the air at the installation site does not exceed 50% at a maximum temperature of +40°C; Higher relative humidity is allowed at lower temperatures, such as up to 90% at +20°C, and special measures should be taken against condensation occurred occasionally due to temperature changes.

4.4 Pollution degree: 3.

4.5 Installation category: Class III.

4.6 Impact vibration: There is no severe impact and vibration at the installation site.

4.7 Installation method: Screw-mounted.

4.8 Installation conditions: Vertical installation, the inclination in each direction is not greater than ±5°.

4.9 Protection grade: IP00.

5 Accessory Installation

5.1 CJX2-80C ~ 250C

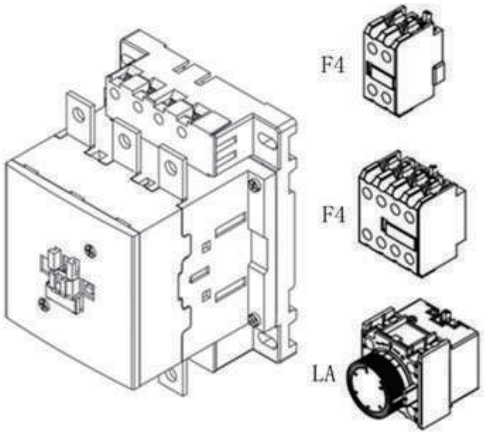

F4: Top-hanged

LA: Delay head

5.2 CJX2F-320C ~ 750C

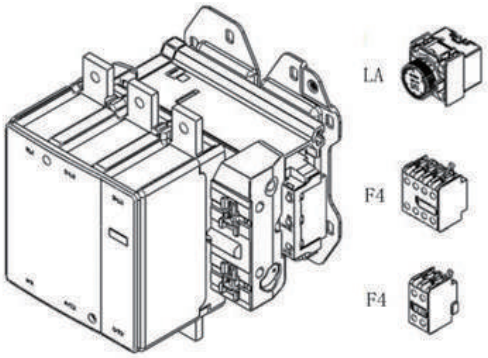

F4: Top-hanged

LA: Delay head

CJX2(F)-C Series AC Contactor(AC-1)

6 Outline and Installation Dimensions

6.1 CJX2-80C outline drawings and installation dimensions

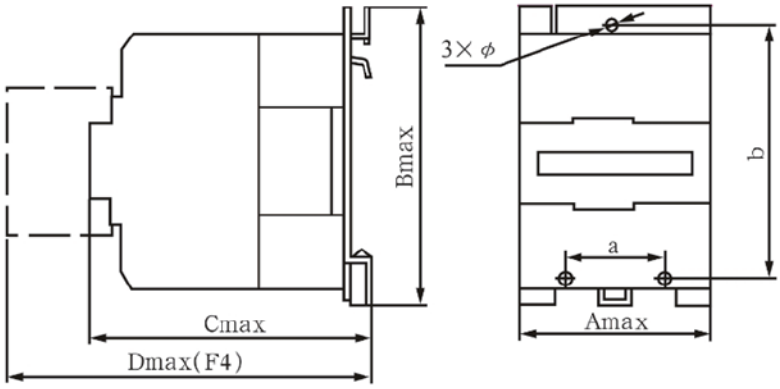

Unit: mm

Model	Amax	Bmax	Cmax	Dmax	a	b	φ
CJX2-80C	79	128	116	154.5	40±0.50	100±0.70/110±0.70	$6.5^{+0.58}_{0}$

6.2 CJX2-150C ~ 250C outline drawings and installation dimensions

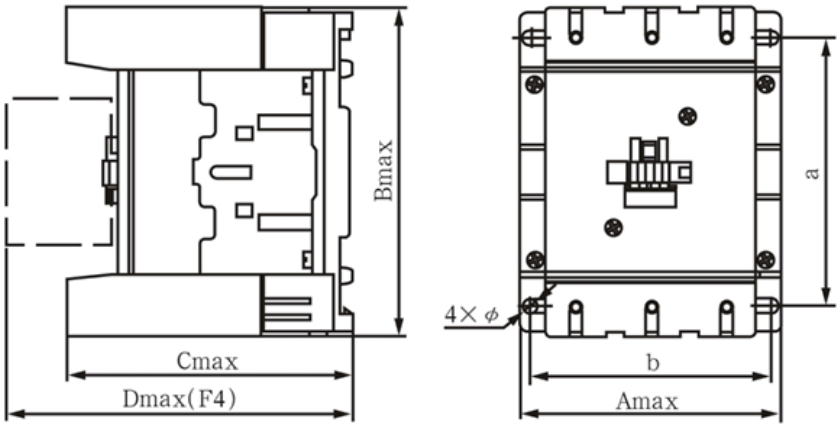

Unit: mm

Model	Amax	Bmax	Cmax	Dmax	a	b	φ
CJX2-150C ~ 250C	122	160	135	173.5	130±0.70	96±0.70/110±0.70	$6.5^{+0.58}_{0}$

CJX2(F)-C Series AC Contactor(AC-1)

6.3 CJX2F-320C ~ 750C outline drawings and installation dimensions

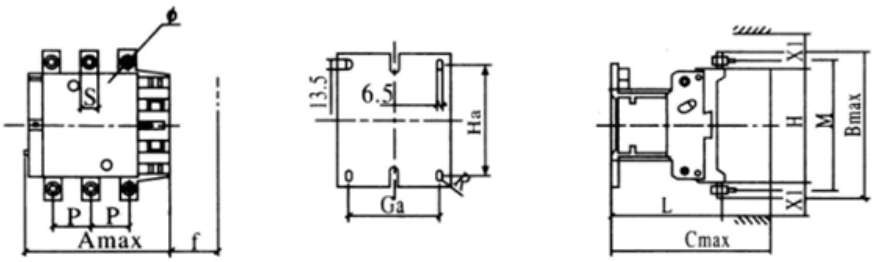

CJX2F–320C ~ 500C

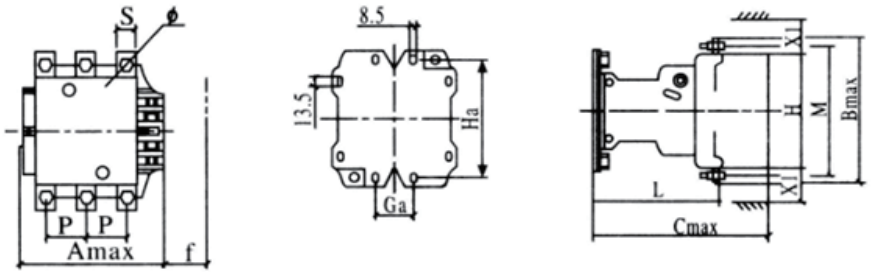

CJX2F–670C ~ 750C

Unit: mm

mm	CJX2F-320C	CJX2F-375C	CJX2F-400C	CJX2F-500C	CJX2F-670C	CJX2F-750C
A	167	172	202	202	214	233
B	171	199	203	203	209	240
C	174	186	217	217	222	233
P	40	48	48	48	48	55
S	20	25	25	25	25	30
Φ	M8	M10	M10	M10	M10	M10
f	131	131	147	147	151	169
M	150	172	178	178	181	208
H	124	127	147	147	158	172
L	107	113.5	141	141	145	146
X1 200 ～ 500V 660 ～ 1000V	 10 15	 10 15	 10 15	 10 15	 15 20	 15 20
Ga	80	80	96	96	80	80
Ha	106 ～ 120	106 ～ 120	110 ～ 120	110 ～ 120	170 ～ 180	170 ～ 180

CJX2(F)-C Series AC Contactor(AC-1)

7 Product Wiring Diagram

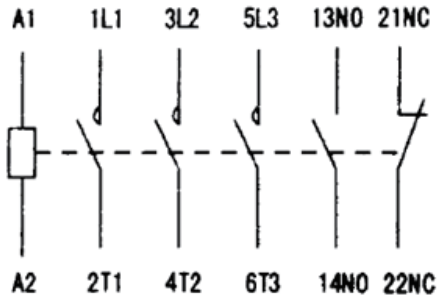

CJX2–80C

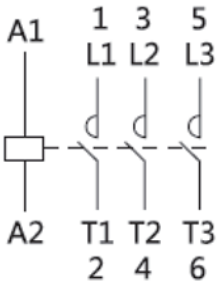

CJX2–150C ~ 750C

8 Ordering Notice

8.1 Please specify the following when ordering:

Full model, name, and order quantity and contactor

8.2 Check the following when ordering:

CJX-80C AC contactor has one open and one closed aux. contact, and other models have no aux. contact.

8.3 Order example:

CJX2-80C AC contactor coil voltage 220V, 54Hz, 24 units; F4-22 10 pcs.

TGR1 Series Thermal Overload Relay

1 Overview

TGR1 Series Thermal Overload Relay (hereinafter referred to "thermal relay") is used in the AC 50Hz/60Hz long-term continuously working or intermittently working AC motor with the operating voltage of 690V and below and with the current up to 100A (under the rated operating voltage 380V) as the overload protection and open phase protection.

The thermal relay complies with IEC 60947-4-1 and IEC 60947-5-1 standard.

The thermal relay can be inserted into the contactor, and a mounting seat is provided for independent installation.

2 Type Designation

TG R □ - 18

- 18: Rated Frame current
- □: Design code. (1, H, K: named according to the different sales channels)
- R: Thermal overload relay
- TG: Enterprise code

F Z 1 - □

- □: Frame current:
  18: For TGR1-18
  25: For TGR1-25
  38: For TGR1-38
  95: For TGR1-95, TGR1-100
- 1: Design code.
- Z: Independent mounting seat
- F: Accessory code

3 Technical Parameters

Item			TGR1-18, 25, 38, 95, 100		
Working temperature limit			-25℃～+50℃		
Trip level			10A		
Rated impulse voltage, Uimp kV			6		
Rated insulation voltage, Ui V			690		
Overload protection			Yes		
Phase loss protection			Yes		
Manual reset			Yes		
Automatic reset			Yes		
stop button			Yes		
Test button			Yes		
Trip indicator			Yes		
Inclination between installation surface and vertical surface			±5°		
Installation method			Combined type, independent type		
Auxiliary circuit	Rated insulation voltage Ui V		380		
	Use category		AC-15		DC-13
	Rated working voltage Ue V		220	380	220
	Rated working current Ie A		1.64	0.95	0.15
	Resistive current Ith A	Normal open	5	5	5
		Normal closed	5	5	5
Certificate			CCC、CE		

4 Normal operation conditions and installation conditions

4.1 Altitude: Not exceed 2,000 meters.

4.2 Environmental temperature: The ambient air temperature is ranged -5℃ ~ +40℃, and the average value within 24 hours does not exceed +35℃

4.3 Atmospheric conditions: The relative humidity does not exceed 50% when the maximum temperature is +40℃; higher relative humidity is allowed at a lower temperature, and the mean monthly minimum temperature of the wettest month does not exceed +25℃; the mean monthly maximum relative humidity of this month does not exceed 90%. Special measures should be taken for occasionally occurred condensation.

4.4 Pollution degree: 3.

4.5 Installed at the normal working position, the inclination between the mounting surface and the vertical surface does not exceed 5°.

4.6 Installed at a place where a rain and snow prevention device is provided not full of water steam.

4.7 The installation site shall be free of significant shaking, shock and vibration.

4.8 Installed at a place without explosive dangerous medium not containing gas and conductive dust to cause corrosion to the metal and damage to the insulation.

TGR1 Series Thermal Overload Relay

5 Structure Features

In addition to the overload protection and phase loss protection, the thermal relay ahs the following structure features:
Three-phase dual-metal sheet type, with trip level of 10A.
With manual and auto reset buttons.
With action indicator.
With stop button.
With a setting current continuously adjustable device.
With one normally open contact and one normally closed contact that can be separately electrically.
Installation method: Plugged in the contactor or independently mounted.

6 Protection Features

6.1 The action features when the loads of all phases of thermal relay are balanced shall comply with the table below:

No.	Multiple of setting current	Action time	Initial condition	Ambient air temperature, C
1	1.05	≥ 2h	Cold state starts	20±5
2	1.2	< 2h	Hot state (after Item 1 test) starts	
3	1.5	< 2 min		
4	7.2	2s<Tp≤10s	Cold state starts	

6.2 The action features when the loads of all phases of thermal relay are imbalanced shall comply with the table below:

No.	Multiple of setting current		Action time	Initial condition	Ambient air temperature, C
	Any two phases	Third phase			
1	1.0	0.9	≥ 2h	Cold state starts	20±5
2	1.15	0	< 2h	Hot state (after Item 1 test) starts	

6.3 Thermal relay trip characteristic curve seen the figure below

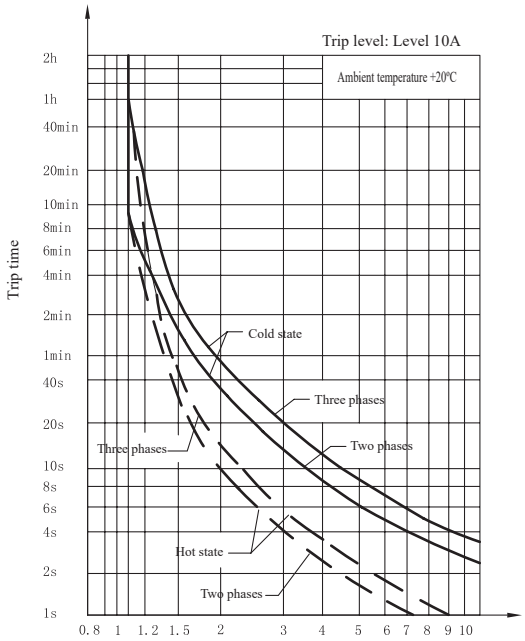

Multiple of setting current
Time – current characteristic curve

TGR1 Series Thermal Overload Relay

7 Selection and Ordering Data

Appearance	Rated current (A)	Matched fuse specification (RT16) A	Connecting wire specification mm^2	Model of matched contactor
TGR1-18	0.1 ~ 0.16	2	1	TGC1-06, TGC1-09 TGC1-12, TGC1-18 Combined installation, with mounting seat provided for independent installation
	0.16 ~ 0.25	2		
	0.25 ~ 0.4	2		
	0.4 ~ 0.63	2		
	0.63 ~ 1	4		
	1 ~ 1.6	4		
	1.6 ~ 2.5	6		
	2.5 ~ 4	10		
	4 ~ 6	16		
	5.5 ~ 8	20		
	7 ~ 10	20	1.5	
	9 ~ 13	25	2.5	
	12 ~ 18	32		
TGR1-25	1 ~ 1.6	2	1	TGC1-09、TGC1-12 TGC1-18、TGC1-25 TGC1-32、TGC1-38 Combined installation, with mounting seat provided for independent installation
	1.6 ~ 2.5	4		
	2.5 ~ 4	6		
	4 ~ 6	8		
	5.5 ~ 8	12		
	7 ~ 10	12	1.5	
	9 ~ 13	16	2.5	
	12 ~ 18	20		
	17 ~ 25	25	4	
TGR1-38	9 ~ 13	25	2.5	TGC1-25, TGC1-32TGC1-38 Combined installation, with mounting seat provided for independent installation
	12 ~ 18	32		
	17 ~ 25	50	4	
	23 ~ 32	63	6	
	30 ~ 38	80	10	
TGR1-95	23 ~ 32	63	6	TGCA-40、TGCA-50、TGCA-65、TGCA-75、TGCA-85、TGCA-100 Combined installation, with mounting seat provided for independent installation
	30 ~ 40	80	10	
	37 ~ 50	100		
	48 ~ 65	125	16	
	55 ~ 70	125	25	
	63 ~ 80	160		
	80 ~ 95	160	35	

TGR1 Series Thermal Overload Relay

Continued table

Appearance	Rated current (A)	Matched fuse specification (RT16) A	Connecting wire specification mm^2	Model of matched contactor
TGR1-100	23 ～ 32	63	6	TGCA-40、 TGCA-50、 TGCA-65、 TGCA-75、 TGCA-85、 TGCA-100 Combined installation, with mounting seat provided for independent installation
	30 ～ 40	80	10	
	37 ～ 50	100		
	48 ～ 65	125	16	
	55 ～ 70	125	25	
	63 ～ 80	160		
	80 ～ 95	160	35	
	86 ～ 100	160		

8 Accessories Description

Accessory appearance	Name	Purpose
	FZ1−18	Form an independent installation product with TGR1-18
	FZ1−25	Form an independent installation product with TGR1-25
	FZ1−38	Form an independent installation product with TGR1-38
	FZ1−95	Form an independent installation product with TGR1-95, TGR1-100

TGR1 Series Thermal Overload Relay

9 Outline and Installation Dimensions

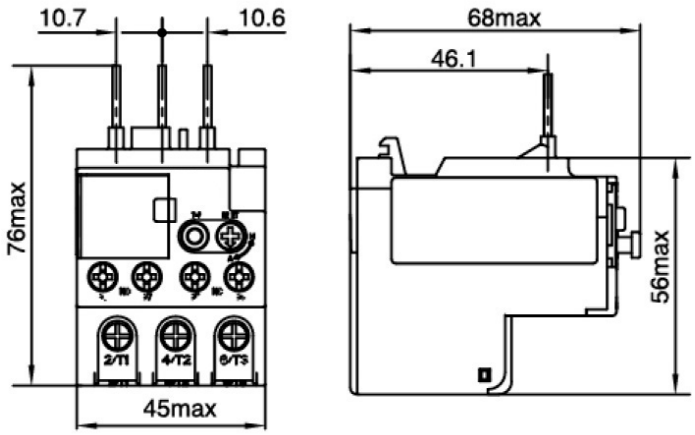

Fig. 1 TGR1-18 combined installation

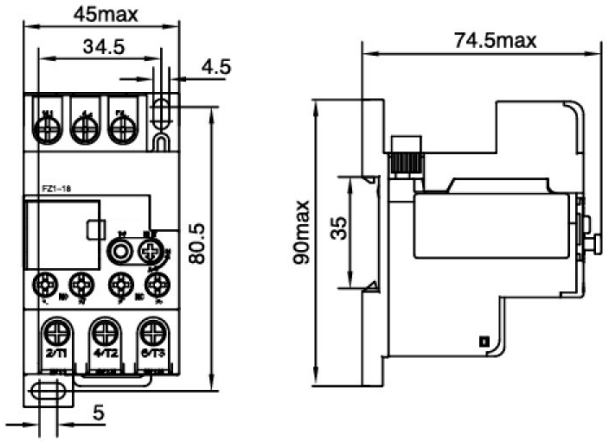

Fig. 2 TGR1-18 independent installation

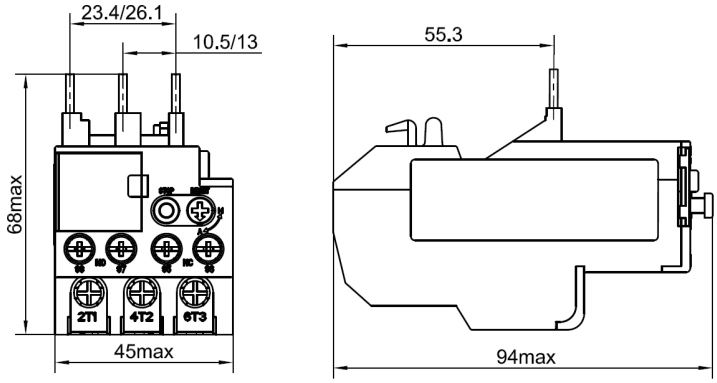

Fig. 3 TGR1-25 combined installation

TGR1 Series Thermal Overload Relay

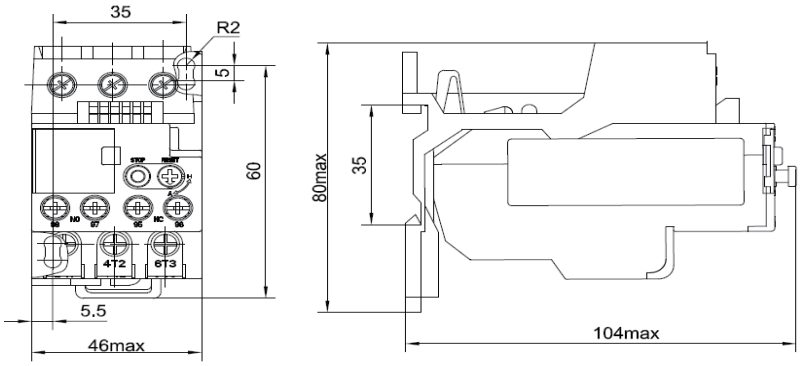

Fig. 4 TGR1-25 independent installation

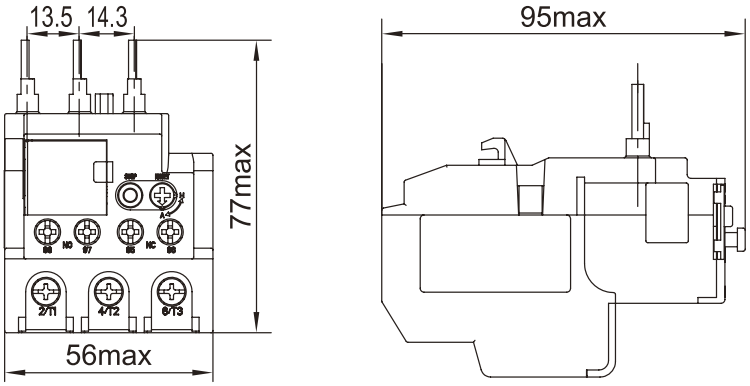

Fig. 5 TGR1-38 combined installation

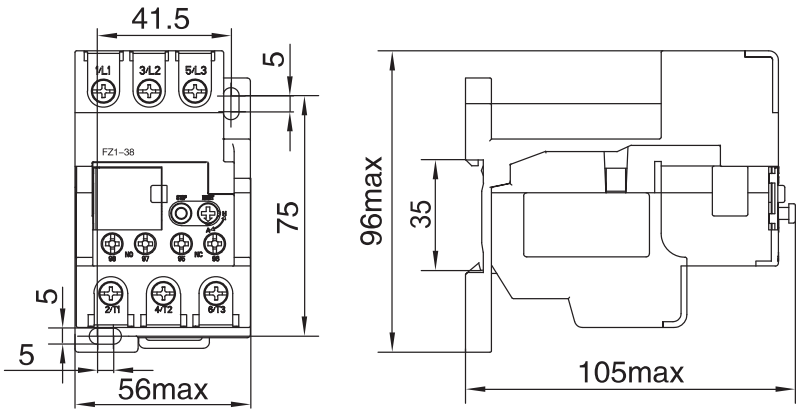

Fig. 6 TGR1-38 independent installation

TGR1 Series Thermal Overload Relay

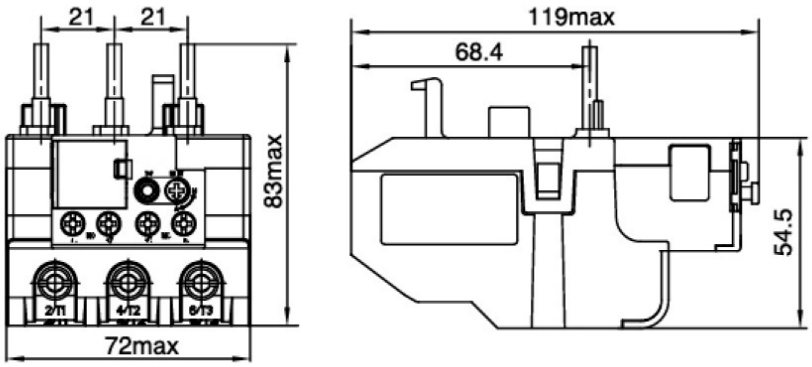

Fig. 7 TGR1-95, TGR1-100 stand-alone installation

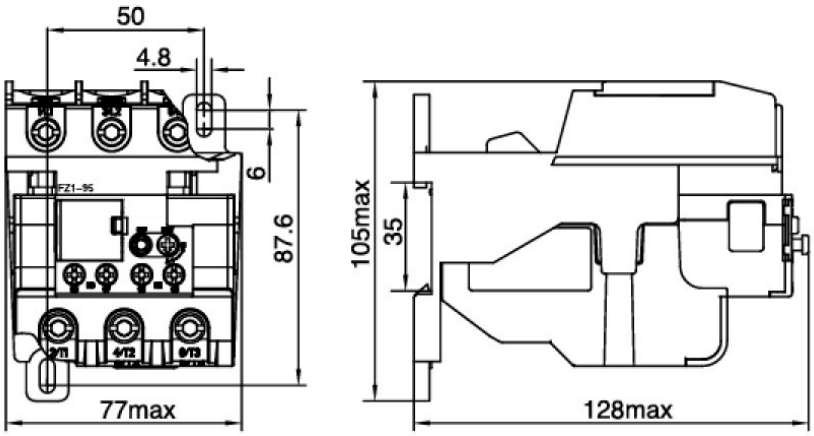

Fig. 8 TGR1-95, TGR1-100 combined installation

10 Ordering Notice

Please specify the model, rated working current, thermal element setting current range and order quantity of the thermal relay when ordering. If independent installation is required, the corresponding mounting seat must be ordered.

For example: Combined installation thermal relays TGR1-18 2.5-4A 20 sets.

Independent installation TGR1-18 2.5-4A 10 sets, FZ1-18, 10 sets.

JR28 Series Thermal Overload Relay

1 Overview

JR28 series thermal overload relay (hereinafter referred to as “thermal relay”) is suitable for AC 50/60Hz AC motor running for long term or intermittently running for long term with working voltage of 690V and below and with current up to 93A for overload protection and open-phase protection.

Thermal relay can be spliced with the contactor, and can be installed separately.

Standard: IEC 60947-4-1, IEC 60947-5-1.

2 Type Designation

JR 28 - □

- Frame current
- Design code
- Thermal overload relay model

3 Main Parameters

Item			JR28-25	JR28-36	JR28-93
Rated current			25	36	93
Rated insulation voltage V			690	690	690
Open-phase protection			Yes	Yes	Yes
Manual and auto reset			Yes	Yes	Yes
Temperature compensation			Yes	Yes	Yes
Trip indicator			Yes	Yes	Yes
Test button			Yes	Yes	Yes
Stop button			Yes	Yes	Yes
Installation method			Plug-in type, standalong type	Plug-in type, standalong type	Plug-in type, standalong type
Aux. contact			1NO+1NC	1NO+1NC	1NO+1NC
AC-15 rated working current A		220V	2.73	2.73	2.73
		380V	1.58	1.58	1.58
Sectional area of wire mm^2	Main circuit	Single-core or stranded wire	1~4	6~10	6~35
		Wiring screw	M4	M4	M10
	Aux. circuit	Single-core or stranded wire	2×(0.5~1)	2×(0.5~1)	2×(0.5~1)
		Wiring screw	M3.5	M3.5	M3.5

JR28 Series Thermal Overload Relay

4 Working Conditions and Installation Conditions

4.1 Ambient air temperature: -5℃~+40℃, the mean measured within 24h does not exceed 35℃.

4.2 Altitude: Not exceed 2,000 meters.

4.3 Relative humidity: The relative humidity does not exceed 50% at the maximum temperature +40℃, and a higher relative humidity is permissible at a lower temperature. The mean monthly minimum temperature of the wettest month does not exceed +25℃, and the mean monthly maximum relative humidity of this month does not exceed 90%. Special measures are taken for condensation occurred occasionally due to temperature changes.

4.4 Pollution degree: 3.

4.5 Installation conditions: The angle between the mounting surface and the vertical surface does not exceed ±5°.

4.6 It should be installed in places not full of water vapor with rain- and snow-proof device provided.

4.7 There is no obvious shaking, impact, or vibration.

4.8 There is no explosive and hazardous medium and the medium does not contain enough gas or conductive dust that can cause corrosion to the metal and damage to the insulation.

5 Structure Features

5.1 In addition to overload protection and open-phase protection functions, thermal relay has the following structure features:

- Three-phase bimetal plate type, trip level is 10A
- With temperature compensation function.
- With manual and auto reset buttons.
- With action indicator.
- With stop button.
- With test mechanism.
- With a continuous adjusting device for setting current
- With an electrically separable normally-open contact and an electrically separable normally-closed contact

5.2 Installation method: Plug-in type installation with contactor or standalone type installation.

6 Protection Features

6.1 Action characteristics when all phase loads of thermal relay are balanced shall comply with the table below

No.	Set current multiple	Action time	Starting condition	Ambinet ari temperature ℃
1	1.05	≥ 2h	Cold state starts	(+20±5)℃
2	1.2	< 2h	Hot state (after No. 1 test) starts	
3	1.5	< 2 min		
4	7.2	2s<Tp≤10s	Cold state starts	

JR28 Series Thermal Overload Relay

6.2 Action characteristics when all phase loads of thermal relay are unbalanced shall comply with the table below

No.	Set current multiple		Action time	Starting condition	Ambinet ari temperature ℃
	Any two phases	Third phase			
1	1.0	0.9	≥ 2h	Cold state starts	(+20±5)℃
2	1.15	0	< 2h	Hot state (after No. 1 test) starts	

6.3 The trip characteristic curve of thermal relay sees figure below

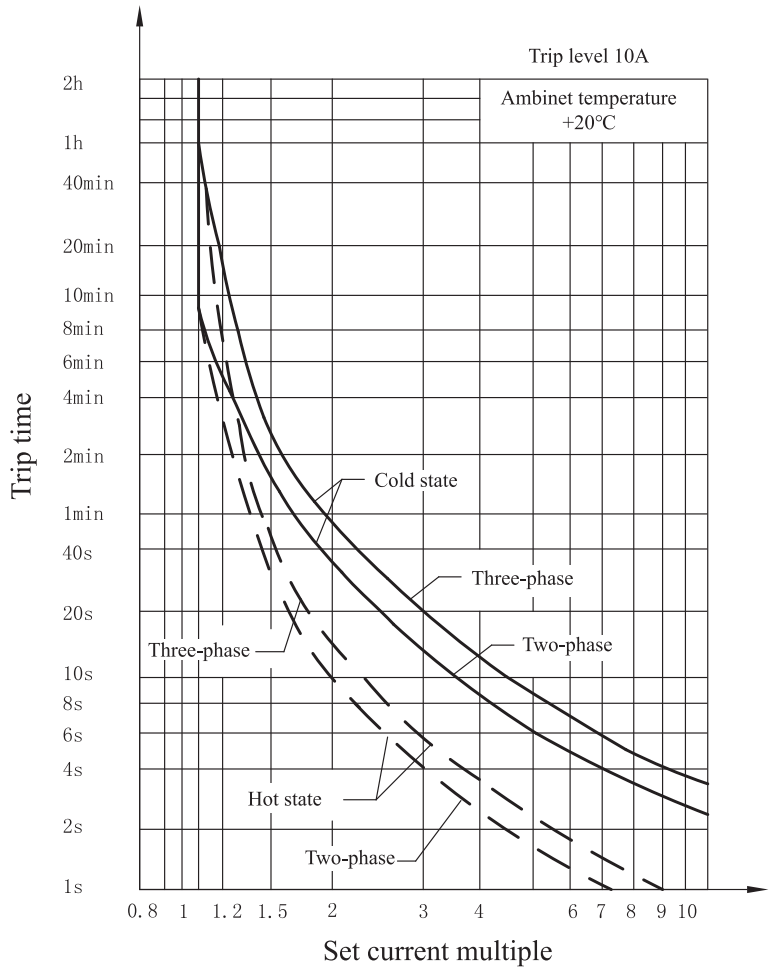

Time-current characteristic curve

JR28 Series Thermal Overload Relay

7 Selection and Matching Table

Product appearance	Rated current (A)	Specification of matched fuse (RT16)A		Model of matched contactor
		aM	gG	
JR28-25	0.1~0.16	0.25	2	Combined installation for CJX2-09, CJX2-12, CJX2-18, CJX2-25, and CJX2-32; standalone installation can be used for base
	0.16~0.25	0.5	2	
	0.25~0.4	1	2	
	0.4~0.63	1	2	
	0.63~1	2	4	
	1~1.6	2	4	
	1.6~2.5	4	6	
	2.5~4	6	10	
	4~6	8	16	
	5.5~8	12	20	
	7~10	12	20	
	9~13	16	25	
	12~18	20	32	
	17~25	25	50	
JR28-36	23~32	40	63	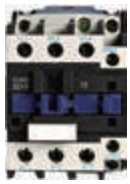 Combined installation for CJX2-32 standalone installation can be used for base
	28~36	40	80	
JR28-93	23~32	40	63	Combined installation for CJX2-40, CJX2-50, CJX2-65, CJX2-80, and CJX2-95; standalone installation can be used for base
	30~40	40	80	
	37~50	63	100	
	48~65	80	125	
	55~70	80	160	
	63~80	80	160	
	80~93	100	160	

JR28 Series Thermal Overload Relay

8 Accessories

Appearance	Name	Usage
	JR28-25 base	Form an standalone product with JR28-25
	JR28-36 base	Form an standalone product with JR28-36
	JR28-93 base	Form an standalone product with JR28-93

9 Outline and Installation Dimensions

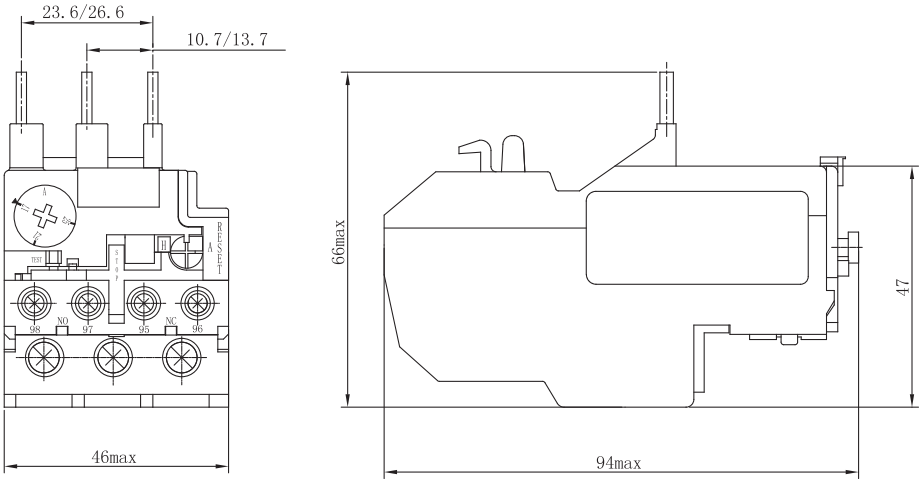

Fig. 1 JR28-25 combined installation

JR28 Series Thermal Overload Relay

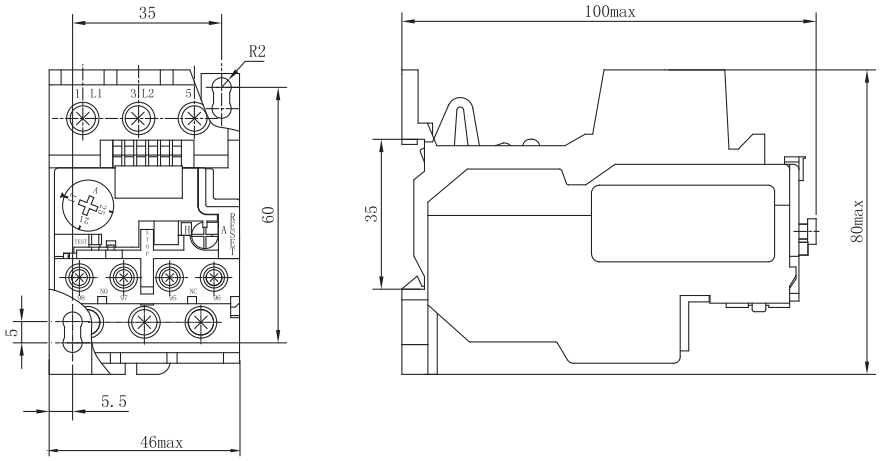

Fig. 2 JR28-25 standalone installation

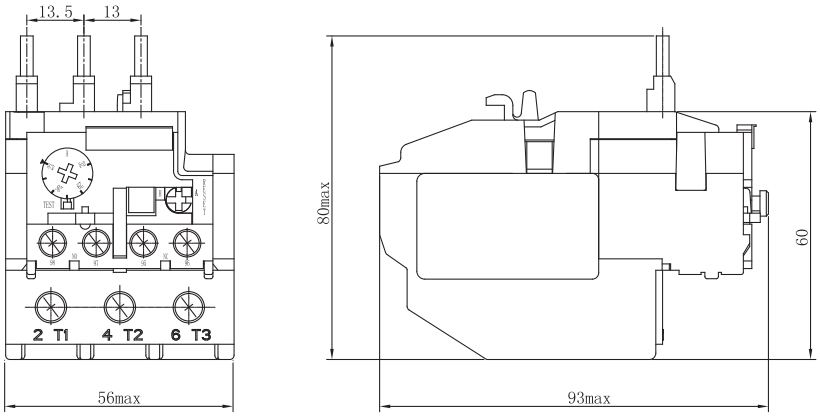

Fig. 3 JR28-36 combined installation

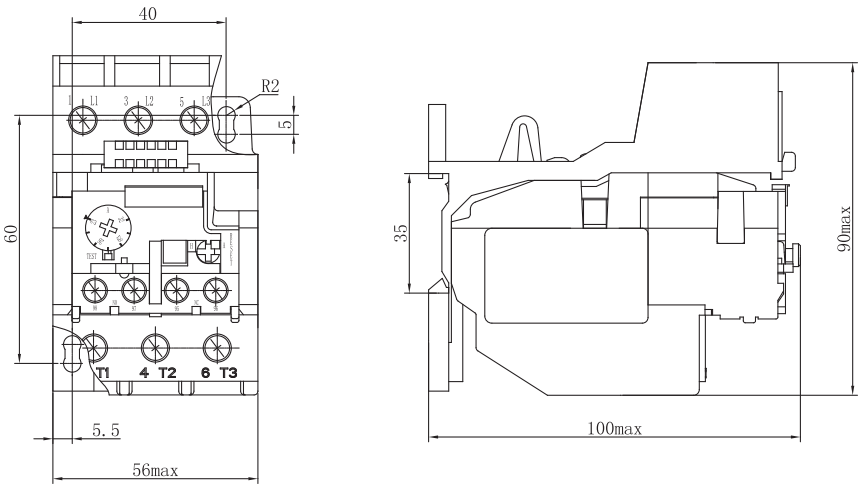

Fig. 4 JR28-36 standalone installation

JR28 Series Thermal Overload Relay

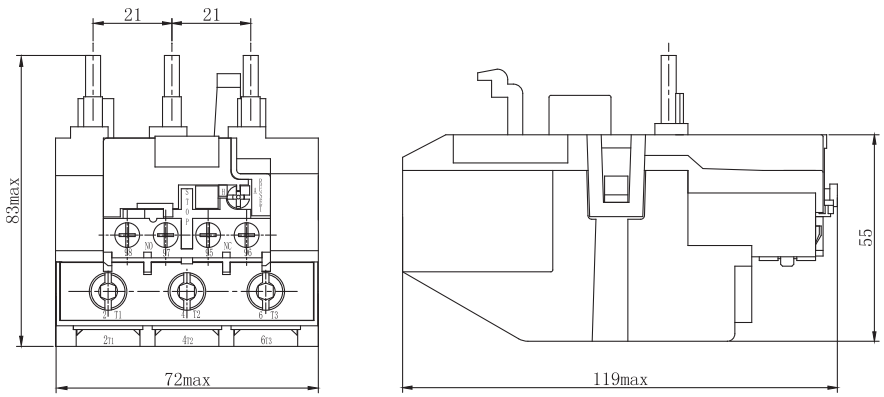

Fig. 5 JR28-93 combined installation

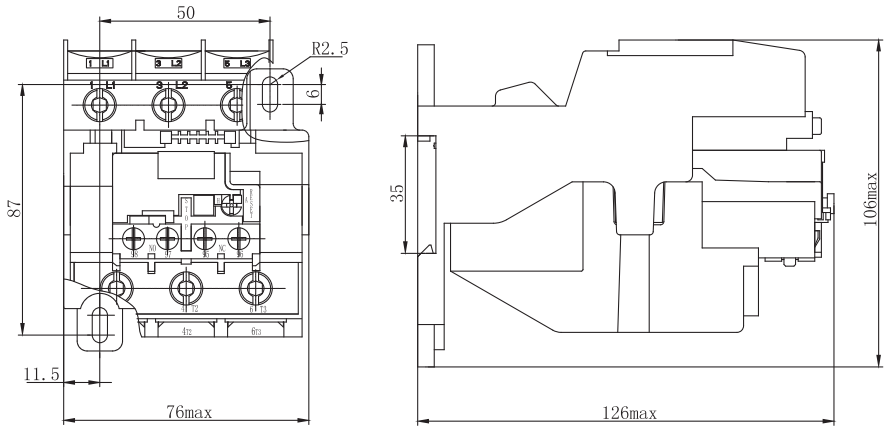

Fig. 6 JR28-93 standalone installation

10 Ordering Notice

Please specify the model, rated working current, setting current range of thermal element, and order quantity of thermal relay; if standalone installation is required, the corresponding mounting base shall be ordered.

For example: Combined installation; thermal relay JR28-25 2.5~4A 20 pcs.

Standalone installation: Thermal relay JR28-25 2.5~4A 10 pcs, JR28-25 10 pcs.

TGJ1 Series Contactor Relay

1 Overview

TGJ1 series contactor relays are mainly used in AC 50Hz or 60Hz control circuits with rated working voltage up to 660V for controlling various electromagnetic coils and for amplification and transfer of electrical signals. This relay is a necessary low-voltage electrical appliance for automatic and remote control.

2 Type Designation

TGJ1 - 40

- 40 → Auxiliary contact form
  - 40: 4NO+0NC 04: 0NO+4NC
  - 22: 2NO+2NC 31: 3NO+1NC
  - 13: 1NO+3NC
- TGJ1 → Relay model

TGJ1 contactor type relay selection table

Contact		Item description
Normal open	Normal close	
4	0	TGJ1-40*
0	4	TGJ1-04*
1	3	TGJ1-13*
3	1	TGJ1-31*
2	2	TGJ1-22*

3 Technical Parameters

Main technical parameters	
Rated insulation voltage Ui V	690
Free air resistive current Ith A	10
Rated working current Ie A	AC-15 380V：0.95
	DC-13 220V：0.15
Contact combination	2NO+2NC、3NO+1NC、4NO+0NC、1NO+3NC、0NO+4NC

TGJ1 Series Contactor Relay

Table, continued

Electrical life 10,000 times		110
Mechanical life 10,000 times		1600
Operating frequency Times/h		1200
Rated control circuit voltage Us	50Hz	24、36、48、110、220、380、400、415
	50/60Hz	24、36、48、110、220、380、400、415
Pull-in voltage range		AC 85%~110% Us
Release voltage range		AC 20%~75% Us
Certificate		CE

Coil voltage specification table									
Coil volage	V	24	36	48	110	220	380	400	415
Coil voltage code	50Hz	B5	C5	E5	F5	M5	Q5	V5	N5
	50/60Hz	B7	C7	E7	F7	M7	Q7	V7	N7

4 Operating Conditions

4.1 Ambient temperature: limit working temperature: -35ºC ~ +70ºC; normal working temperature: -5ºC ~ +40ºC; the average value within 24 hours does not exceed +35ºC;

4.2 Installation conditions: The inclination between the mounting surface and the vertical surface is not more than ±22.5ºC, and the installation category is Class III;

4.3 Pollution degree: 3;

4.4 Altitude: No more than 2,000 meters;

4.5 Atmospheric conditions: The relative humidity of the atmospheric air does not exceed 50% at +40°C. Higher relative humidity is allowed at lower temperatures. The monthly mean minimum temperature of the wettest month does not exceed +25°C, the monthly mean maximum relative humidity of that month does not exceed 90%, and the condensation occurred on the product due to temperature changes shall be considered;

4.6 The product should be installed and used in a place where there is no obvious shaking, impact and vibration.

TGJ1 Series Contactor Relay

5 Accessory Installation Diagram

6 Outline and Installation Dimensions

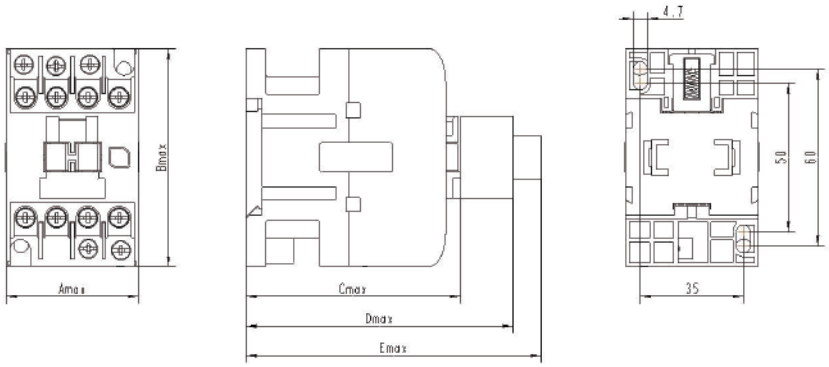

Unit: mm

Spec. & Model	Amax	Bmax	Cmax	Dmax	Emax	a	b	c	d
TGJ1	45	74	73	111	131	35	50.6~60.2	-	-

TGJS1 Series Time Relay

1 Overview

TGJS1 series time relay is used in the AC 50Hz control circuit with the rated control power voltage of 380V and below or the DC voltage 24V as a delay element to power on or power off the circuit as scheduled.
The thermal relay complies with IEC 60947-4-1 and IEC 60947-5-1 standard.
The thermal relay can be inserted into the contactor, and a mounting seat is provided for independent installation.

2 Type Designation

TG JS 1-S □ □ □

- Rated control power voltage
- Number of contacts
  No: Delay 1 conversion, with reset and pause functions
  2Z: Delay 2 conversion, with reset and pause functions
- Feature code
  No: Basic type, power-on delay (multi-shift delay)
  R: Cyclic delay (multi-shift delay)
- Digital display: S: Digital display P: Digital
- Design code.
- Time relay
- Enterprise code

3 Technical Parameters

Model	TGJS1-S	TGJS1-S-2Z	TGJS1-SR	TGJS1-SR-2Z
Working method	Power-on delay	Power-on delay	Circular delay	Circular delay
Number of contacts	Delay 1 conversion	Delay 2 conversion	Delay 1 conversion	Delay 2 conversion
Contact capacity	5A 220VAC(resistive) Ue/Ie: AC-15 220V/0.5A; DC-13 24V/0.5A; Ith: 5A			
Power voltage	AC50Hz 24V, 36V, 110V, 220V, 380V; DC24V; (Other voltage can be customized)			
Electrical life	1×10^5 times			
Mechanical life	1×10^6 times			
Delay accuracy	≤1%			
Ambient temperature	−5℃～＋40℃			
Installation method	Panel-type, with P2CF-08 base provided to realize the device-type or rail-type installation			

Model	Delay range
TGJS1-S TGJS1-S-2Z	1s～99min99s、1min～99h99min、0.01s～99.99s、0.1s～999.9s、1s～9999s、0.1min～999.9min、1min～9999min、0.1h～999.9h、10s～99990s、1h～9999h
TGJS1-SR TGJS1-SR-2Z	1min～99min、1h～99h、1s～99s、0.1s～9.9s、0.1min～9.9min、0.1h～9.9h、0.01s～0.99s、10s～990s、10min～990min、10h～990h

TGJS1 Series Time Relay

4 Wiring Diagram

TGJS1-S Wiring diagram

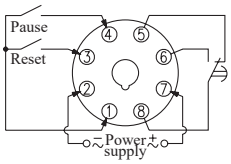

TGJS1-S-2Z Wiring diagram

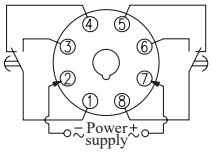

TGJS1-SR Wiring diagram

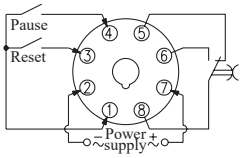

TGJS1-SR-2Z Wiring diagram

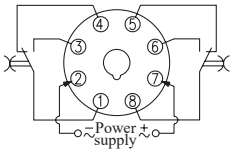

5 Outline and Installation Dimensions

Outline and installation dimension for TGJS1 series product

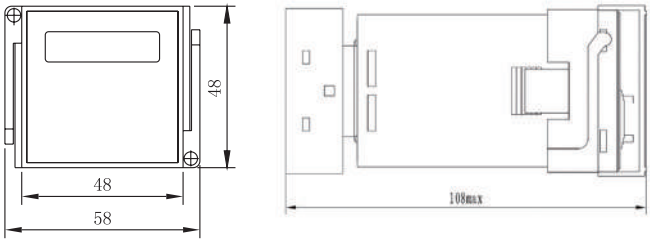

Hole size

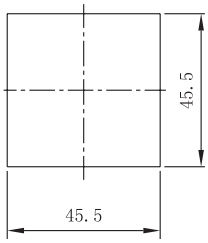

6 Ordering Notice

If TGJS1 series time relay is device-installed or rail-installed, the base P2CF-08 shall be ordered by user.

JS14-A Series Time Relay

1 Overview

JS14-A series time relay is used in AC 50Hz control circuit with rated control power voltage of 380V and below or with A DC 24V voltage as delay element for turn on or turn off circuits as scheduled.

2 Type Designation

JS 14 - A □

- □ — Delay model:
  - No: Basic type, power-on delay.
  - C: With snap action contact, power-on delay.
- A — Modified (derived variety)
- 14 — Design code.
- JS — Time relay

3 Technical Parameters

Model	JS14-A	JS14-AC
Working method	Power-on delay	Power-on delay with snap action contact
Power voltage	AC50Hz 36V, 110V, 127V, 220V, 380V, DC24V(other voltage can be customized)	
Repeated error	≤2.5%	
Number of contacts	Delay 2 conversion	Instantaneous action 1 conversion delay 1 conversion
Contact capacity	5A 220VAC(resistive) Ue/Ie: AC-15 220V/0. 5A; DC-13 24V/0. 5A; Ith: 5A	
Electrical life	1×10^5 times	
Mechanical life	1×10^6 times	
Ambient emperature	-5℃~+40℃	
Installation method	Device type, rail type	
Delay accuracy	≤10%	
Delay range	0.1s-1s, 0.5s-5s 1s-10s 3s- 30s, 6s-60s, 12s-120s 18s- 180s, 30s-300s, 60s-600s, 90s-900s 120s-1200s, 180s-1800s, 360s-3600s	

JS14-A Series Time Relay

4 Wiring Diagram

JS14–A

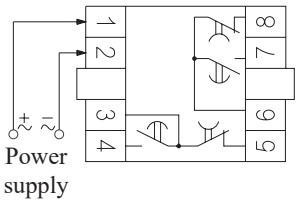

JS14–AC

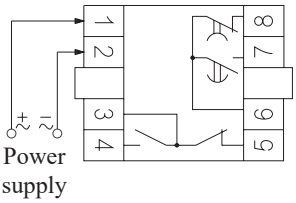

5 Outline and Installation Dimensions

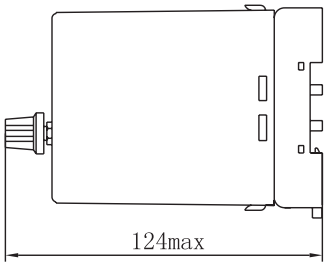

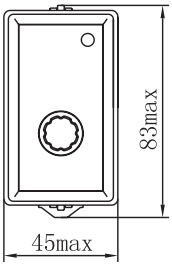

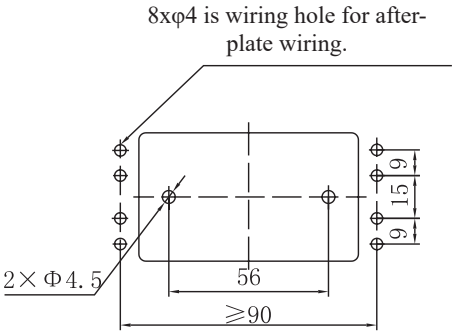

JS14-S Series Time Relay

1 Overview

JS14-S series time relay is used in the AC 50Hz control circuit with rated control power voltage up to 380V or with DC 24V as delay element for turn on or turn off circuits as scheduled.

2 Type Designation

JS 14 – S □ / □ □

- Rated control power voltage
- Time-delay range
- Feature code
  - No: Power-on delay, single-gear delay (with reset and pause functions)
  - 1: Power-on delay, single-gear delay (without reset and pause functions)
- Digital display
- Design code.
- Time relay

3 Technical Parameters

Working mode	Power-on delay
Number of contacts	Delay 2 change-over
Contact capacity	5 A 220VAC (resistive) Ue/Ie: AC-15 220V/0.5A; DC-13 24V/0.5A; Ith: 5A
Power voltage	AC50Hz 36V、110V、127V、220V、380V、DC24V (other voltage can be customized)
Electrical life	1×10^5 times
Mechanical life	1×10^6 times
Delay accuracy	≤1%
Ambient temperature	－5℃～＋40℃
Installation method	Panel-type

Model	Delay range
JS14-S JS14-S1	0.1s～9.9s, 1s～99s, 0.1min～9.9min, 1min～99min, 0.1h～9.9h, 1h～99h, 0.01s～9.99s, 0.1s～99.9s, 1s～999s, 1s～9min59s, 0.1min～99.9min, 1min～999min, 1min～9h59min, 0.1h～99.9h, 1h～999h, 0.01s～99.99s, 0.1s～999.9s, 1s～9999s, 0.1min～999.9min, 1min～99h59min, 1s～99min59s, 1min～9999min, 0.1h～999.9h, 1h～9999h

JS14-S Series Time Relay

4 Wiring Diagram

JS14－S

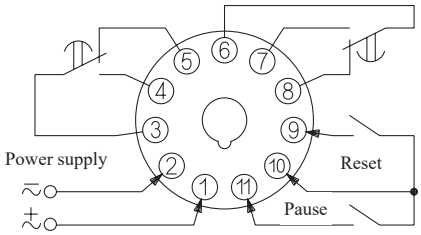

JS14–S1

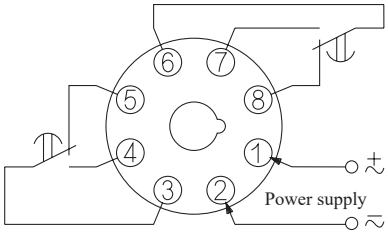

5 Outline and Installation Dimensions

Outline dimensions

Mounting hole size

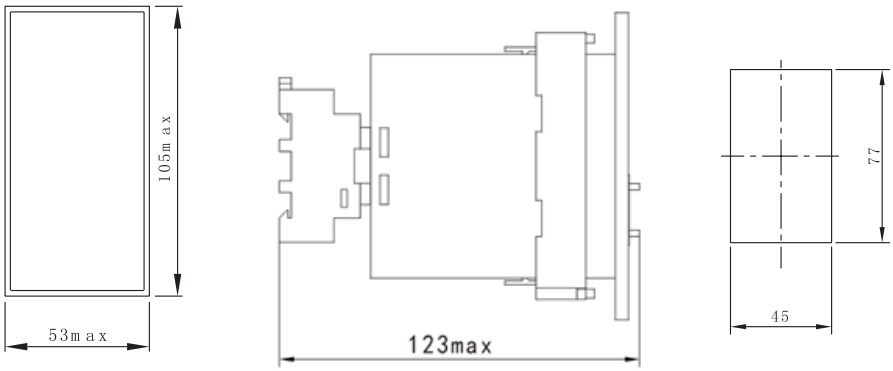

TGJC1 Series Mini Electromagnetic Relay

1 Overview

There are 2Z, 3Z, and 4Z contact forms with complete AC/DC specifications and high contact reliability for PLC control; packaged by a transparent dust cover; the device-type socket options are provided; there are various installation methods; the status indicator specification can be optional.

2 Type Designation

TG JC 1 - 52Z A 220 / H D

- D: Default: Not-illuminated; D: Illuminated
- H: Connection method; Default: Direct-insert type
- 220: Coil voltage:
  AC: 6/9/12/18/24/36/48/50/60/110/120/220/240
  DC: 6/9/12/18/24/36/48/ 60/110
- A: Coil voltage type:
  A: AC D: DC
- 52Z: Contact form:
  52Z: 2 group conversion 53Z: 3 group conversion
  54Z: 4 group conversion 62Z: 2 group conversion
- 1: Design code.
- JC: Mini relay
- TG: Enterprise code

F JC 1 - 52Z

- 52Z: Adaptive relay:
  52Z: for 2 group conversion
  53Z: for 3 group conversion
  54Z: for 4 group conversion
  62Z: for 2 group conversion
- 1: Design code.
- JC: Mini relay
- F: Accessory code

F JC 2 - 52Z

- 52Z: Adaptive relay:
  52Z: for 2 group conversion
  53Z: for 3 group conversion
  54Z: for 4 group conversion
  62Z: for 2 group conversion
- 2: Design code
- JC: Mini relay
- F: Accessory code

TGJC1 Series Mini Electromagnetic Relay

3 Technical Parameters

3.1 Contact parameters

Contact form	2Z (C)、3Z(C)、4Z(C)
Initial contact resistance	100mΩ
Contact material	Silver alloy
Contact load (COSΦ=1.0)	52Z、53Z：5A； 54Z：3A ; 62Z：10A(220VAC/28VDC)
Max. switching voltage	250VAC/125VDC
Max. switching current	52Z、53Z：5A； 54Z：3A ; 62Z：10A
Max. switching power	52Z、53Z：1100VA/140W ; 54Z：660VA/84W ; 62Z：2200VA/280W
Electrical life (times)	35×10^4
Mechanical life (times)	2×10^7

3.2 Performance and characteristic parameters

Insulation resistance		100MΩ(500VDC)
Medium withstand voltage	Between contact coils, between different sets of contacts	1500VAC
	Between break contacts	1000VAC
Action time		≤20ms
Release time		≤20ms
Shock (stability)		10G (half sine wave pulse: 11ms)
Vibration		Double amplitude 1mm, (10~55) Hz
Outgoing terminal form		Plug-in type, PCB type
Dimensions (mm)		27.5x21.5x35.5

3.3 Coil parameters

Rated power	DC:0.9W AC:1.2VA
Operating voltage	DC: ≤ 75% of rated voltage; AC: ≤ 80% of rated voltage
Release voltage	DC: ≥ 10% of rated voltage; AC: ≥ 30% of rated voltage
Max. voltage	110% rated voltage

3.4 Working and installation conditions

Temperature range	-25℃～ +55℃
Relative humidity	Up to 95% at +25℃
Atmospheric pressure	86kPa ～ 106kPa
Work location	Upright or side (reed on top)

TGJC1 Series Mini Electromagnetic Relay

3.5 Specifications

Rated voltage VAC	Operating voltage VAC	Release voltage VAC	Coil resistance Ω±10%
6	4.8	1.8	12
9	7.2	2.7	25
12	9.6	3.6	45
18	14.4	5.4	105
24	19.2	7.2	180
36	28.8	10.8	450
48	38.4	14.4	735
50	40.0	15.0	760
60	48.0	18.0	1050
110	88.0	33.0	3750
127	101.6	38.1	4550
220	176.0	66.0	14500

Rated voltage VAC	Operating voltage VAC	Release voltage VAC	Coil resistance Ω±10%
6	4.8	0.6	40
9	6.75	0.9	90
12	9.0	1.2	160
18	13.5	1.8	360
24	18.0	2.4	650
36	27.0	3.6	1450
48	36.0	4.8	2600
60	45.0	6.0	4000
110	82.5	11.0	13450

Remark: The coil parameters are the values when the coil temperature is at 20℃ .

4 Accessories

Relay model	TGJC1-52Z(D)
Model of matched socket	FJC1-52Z/FJC2-52Z
Socket dimensions (mm)	76×23×30/71×23×30
Socket lead form	Screw type terminal (device type, rail type) PCB type

Relay model	TGJC1-53Z(D)
Model of matched socket	FJC1-53Z/FJC2-53Z
Socket dimensions (mm)	76×30×30/71×30×30
Socket lead form	Screw type terminal (device type, rail type) PCB type

TGJC1 Series Mini Electromagnetic Relay

Relay model	TGJC1-54Z(D)
Model of matched socket	FJC1-54Z/FJC2-54Z
Socket dimensions (mm)	76×30×30/71×30×30
Socket lead form	Screw type terminal (device type, rail type) PCB type

Relay model	TGJC1-62Z(D)
Model of matched socket	FJC1-62Z/FJC2-62Z
Socket dimensions (mm)	79×28×30/71×23×30
Socket lead form	Screw type terminal (device type, rail type) PCB type

5 Outline and Installation Dimensions

5.1 Bottom view of wiring diagram

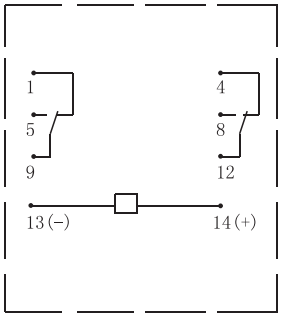

TGJC1-52Z

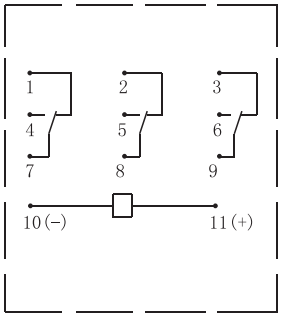

TGJC1-53Z

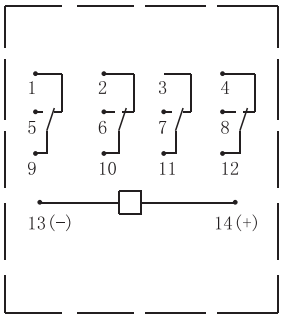

TGJC1-54Z

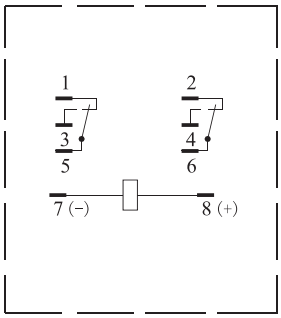

TGJC1-62Z

TGJC1 Series Mini Electromagnetic Relay

5.2 PCB mounting hole locations diagram

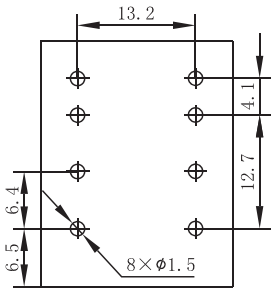

TGJC1-52Z

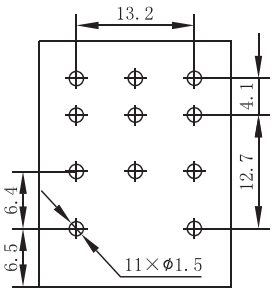

TGJC1-53Z

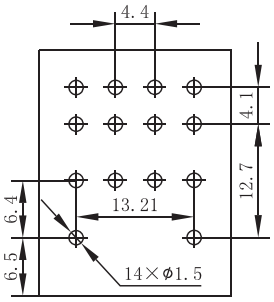

TGJC1-54Z

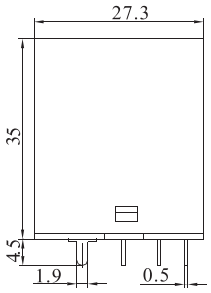

TGJC1-62Z

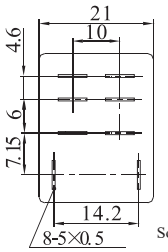

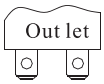

Socket-type lead terminal

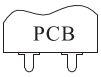

Circuit board welded-type lead terminal

5.3 Outline drawing (plug-in type)

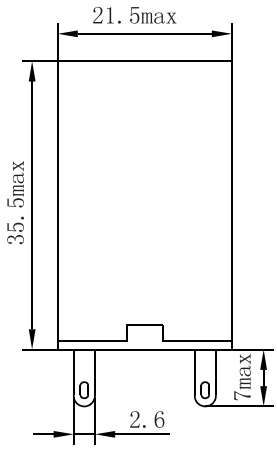

TGJC1-52Z

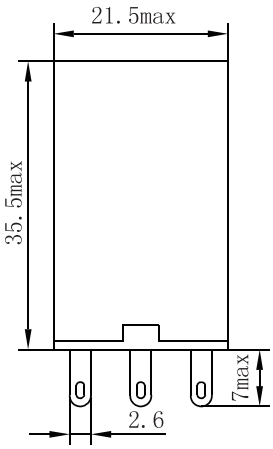

TGJC1-53Z

TGJC1 Series Mini Electromagnetic Relay

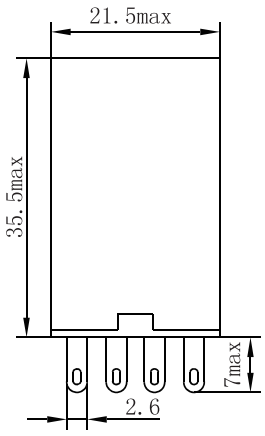

TGJC1-54Z

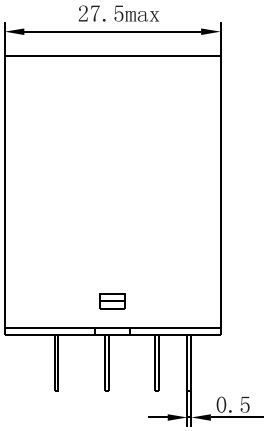

Left view

5.4 Outline drawing (PCB type)

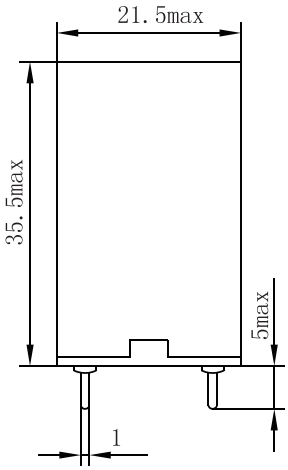

TGJC1-52Z

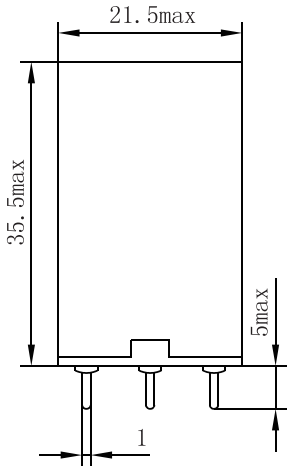

TGJC1-53Z

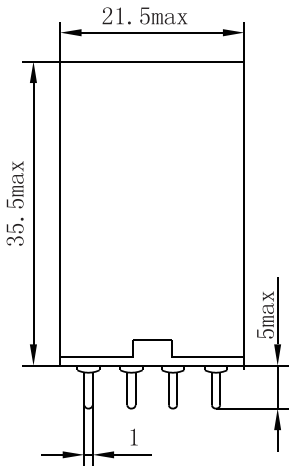

TGJC1-54Z

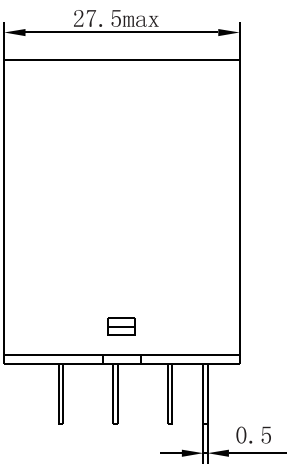

Left view

TGJC1 Series Mini Electromagnetic Relay

5.5 FJC1/FJC2-52Z outline and installation dimensions

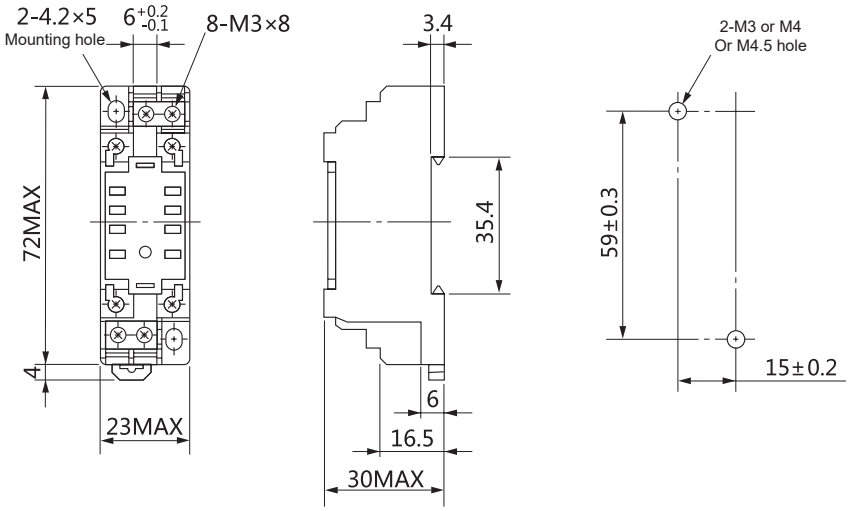

Suitable for relay model: TGJC1-52Z(D)

5.6 FJC1/FJC2-53Z outline and installation dimensions

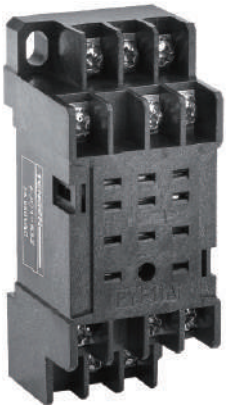

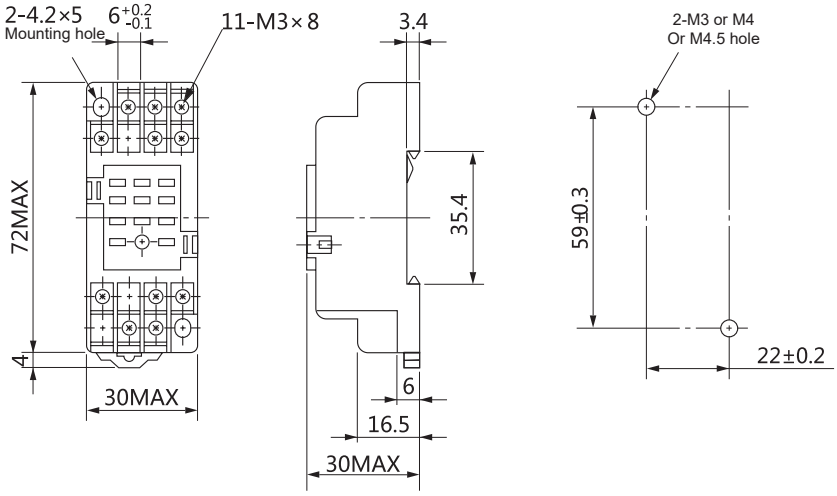

Suitable for relay model: TGJC1-53Z(D)

TGJC1 Series Mini Electromagnetic Relay

5.7 FJC1/FJC2-54Z outline and installation dimensions

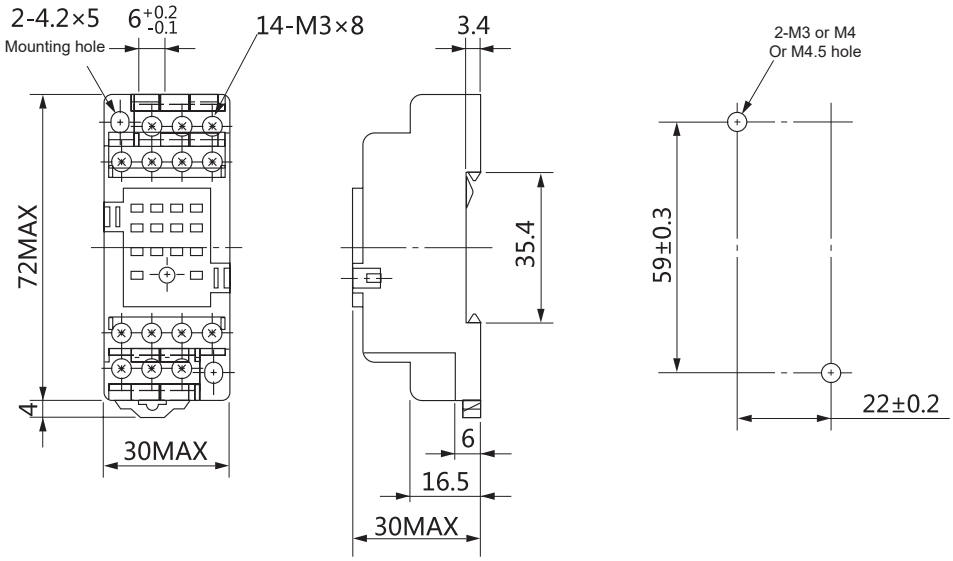

Suitable for relay model: TGJC1-54Z(D)

5.8 FJC1/FJC2-62Z outline and installation dimensions

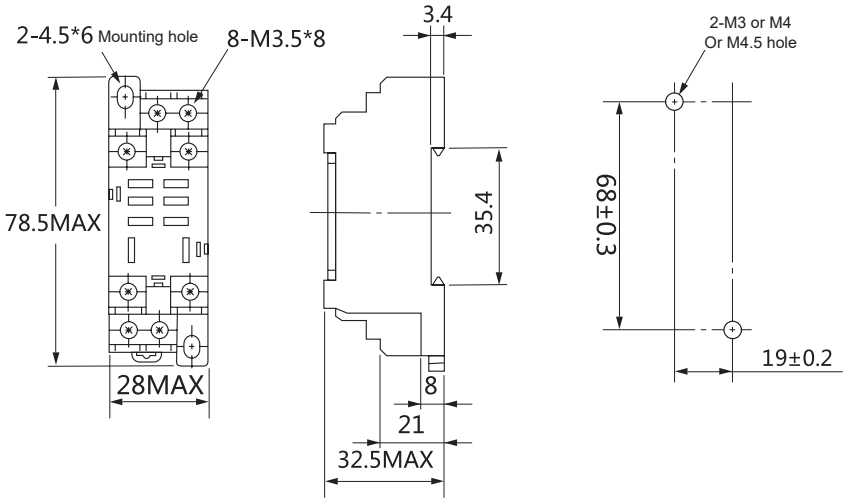

Suitable for relay model: TGJC1-62Z(D)

TGJC1 Series Mini Electromagnetic Relay

6 Ordering Notice

Please specify the following items when ordering:

6.1 Complete name, model, specification and quantity of the product

6.2 Rated control power voltage of coil

6.3 Order example: TGJC1 miniature relay, coil voltage DC 110V, 2 sets of changeover contacts, direct-insert installation method, illuminated; specified as: TGJC1-52ZD110/D

TGCR1 Series Control Relay

1 Overview

TGCR1 series control relay (hereinafter referred to as relay) is suitable for AC 50/60Hz control circuit with rated control power voltage up to AC480V (three-phase three-wire) for line protection control for faults such as open phase, phase sequence, three-phase voltage unbalance, overvoltage, and undervoltage.

2 Type Designation

2.1 Type meaning

TG CR 1 - □

- □ — Function code (see Table 1)
- 1 — Design code
- CR — Control relay
- TG — Enterprise code

2.2 Product Model and Function

Table 1

Model	Overvoltage protection	Undervoltage protection	Unbalance protection	Phase sequence protection	Open-phase protection	Rated voltage optional
TGCR1-PH	-	-	-	●	●	-
TGCR1-PA	●	●	●	●	●	-
TGCR1-PM	●	●	●	●	●	-
TGCR1-PM2	●	●	●	●	●	●

3 Operating, Installation and Transport, Storage Conditions

Table 2

Installation category	Class II, III
Pollution degree	3
Operating temperature	3P, 4P
(Daily mean temperature ≤+35°C)	-25°C ~ +55°C
Storage temperature	-40°C ~ +70°C
Permissible ambient environment	40°C/50% RH, 20°C/90% RH
Altitude	≤ 2,000 meters
Installation	Installed on TH35-7.5 rail
Location of installation	Installed in any position on the rail

TGCR1 Series Control Relay

4 Technical Parameters

4.1 Main technical parameters

Table 3

Model		PH	PA	PM	PM2
Input voltage circuit = measuring voltage		Three-phase three-wire L1-L2-L3			
Rated input voltage Us, frequency		AC380V 50Hz			AC380V~AC480V 50/60Hz
Typical power		Approx. 3W			
Measurement function	Open phase	Yes	Yes	Yes	Yes
	Phase sequence	Yes	Yes	Yes	Yes
	Overvoltage	-	1.2Us fixed	1.05~1.3 adjustable	1.05~1.3 adjustable
	Undervoltage	-	0.8Us fixed	0.7~0.95 adjustable	0.7~0.95 adjustable
	Three-phase unbalance	-	5~15% adjustable	20% fixed	
Reset mode		Auto reset			
Operation time	Open phase, Phase sequence	≤ 1s			
	Overvoltage, undervoltage	-	2s fixed	0.1~10s adjusted	
	Three-phase unbalance	-	0.1~10s adjusted	2s fixed	
Power-on delay		500ms fixed			
LED indicator		Un: Green light; R: Red light			
Number of contacts		1C			2C
Contact control capacity		5A 250VAC, 5A 28VDC Resistive load			
Conventional free air thermal current Ith		5A			
Rated operating voltage Ue		AC380V			
Rated operating current under the usage category Ie		AC-15 0.47A			
Rated insulation voltage		480V			
Rated impulse withstand voltage Uimp		4kV			
Protection grade		IP20			
Pollution degree		3			
Model of short-circuit protective device and maximum value		RT18-32(6A)			
Electrical life		≥ 100,000 times			
Mechanical life		≥ 1,000, 000 times			
Wiring terminal fastening screw		M3			
Tightening torque of wiring terminal fastening screw		0.6N.m			
Wiring capacity	Hard wire without a wiring lug	2 × 0.5…2 × 2.5mm^2 (AWG 20…AWG 14) Hard wire without lug			
	Soft wire with a wiring lug	2 × 0.2…2 × 1.5mm^2 (AWG 24…AWG 16) Flexible wire with lug			
	Hard wire without a wiring lug	1 × 0.5…1 × 3.3mm^2 (AWG 20…AWG 12) Hard wire without lug			
	Soft wire with a wiring lug	1 × 0.2…1 × 2.5mm^2 (AWG 24…AWG 14) Flexible wire with lug			
Weight		Approx. 90g			

TGCR1 Series Control Relay

4.2 Immunity capacity

Table 4

Immunity test item	Test grade
Electrostatic discharge	8kV (air discharge) / 4kV (contact discharge)
Radiofrequency electromagnetic field radiation	10V/m 80MHz ~1000MHz
Electrical fast transient burst	2kV 5kHz Power end
Surge	1kV line-to-line

5 Outline and Installation Dimensions

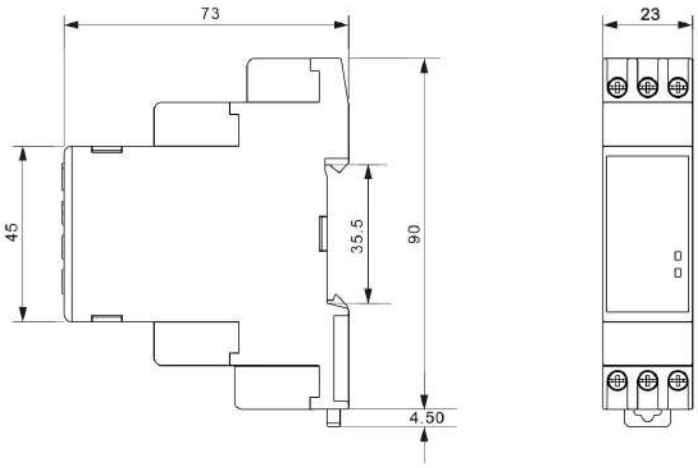

6 Installation and Operation

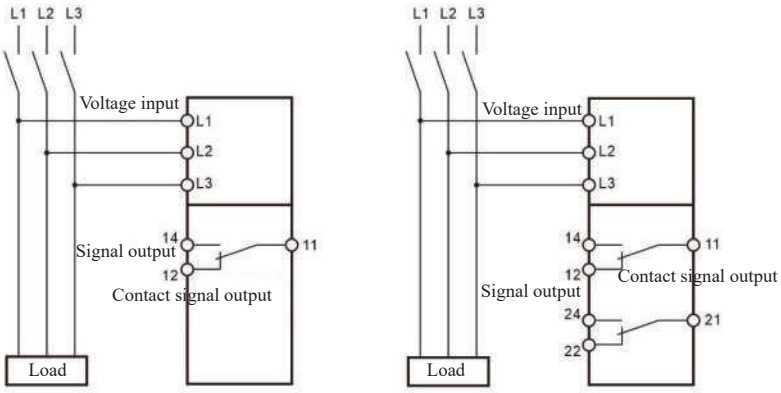

TGCR1-PH PA PM

TGCR1-PM2

TGCR1 Series Control Relay

6.1 Reverse phase and open phase protection sequence chart

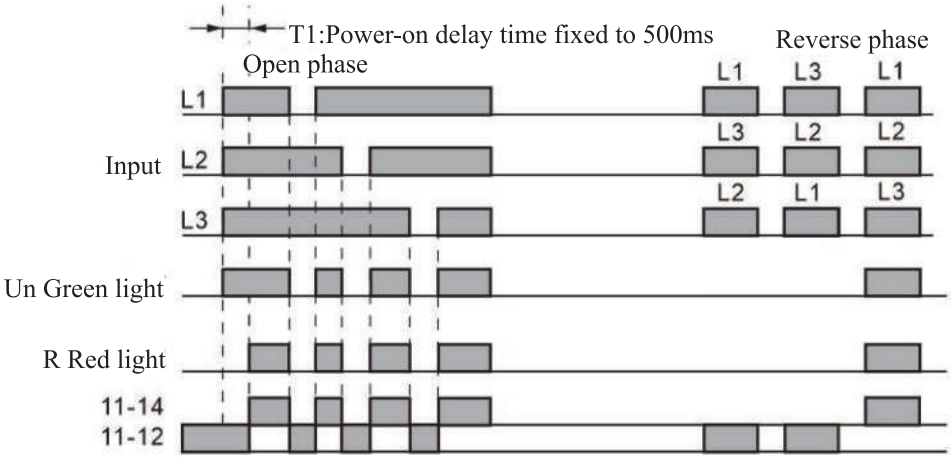

Note 1: The contact is at the operation state under normal input voltage (normally-open ON, normally-closed OFF).

Note 2: As power supply, L1 and L2 will not work if the voltage is less than 70% the minimum input voltage.

Note 3: Open-phase detection is conducted through voltage, and the open phase at the load end cannot be detected.

6.2 TGCR1-PH panel diagram

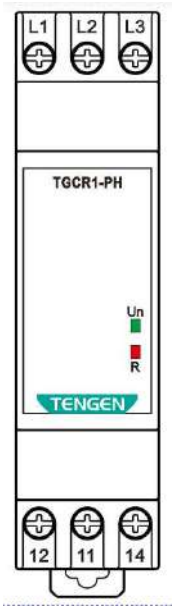

Indicator state

Item	Description
Input voltage indicator Un green light	Always ON under normal voltage; OFF in case of open phase or reverse phase
Contact action indicator R red light	ON when the contact is closed; OFF when the contact opens

TGCR1 Series Control Relay

6.3 Three-phase unbalance protection sequence chart

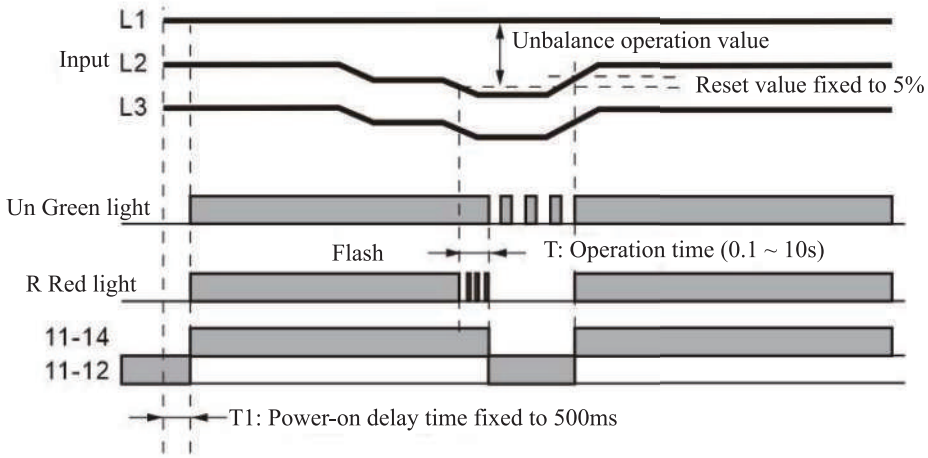

Note 1: The contact is at the operation state under normal input voltage (normally-open ON, normally-closed OFF).

Note 2: Calculation method of unbalance operation value

Unbalance operation condition = (Max. voltage – Min. voltage) > Unbalance operation value

Unbalance operation value = Rated input voltage (V) x Unbalance setting value (%)

6.4 TGCR1-PA Panel Diagram

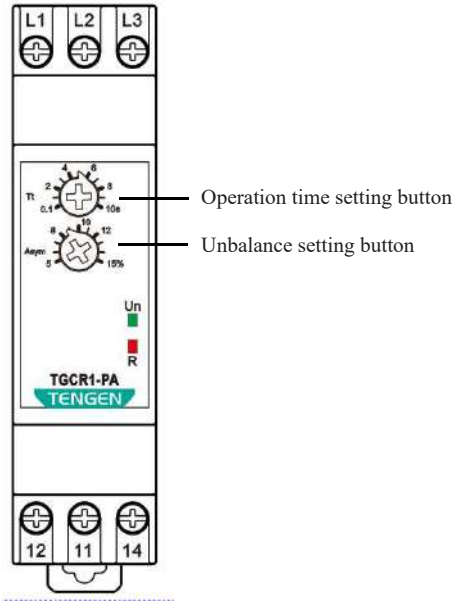

Indicator state

Item	Description
Input voltage indicator Un green light	Normally ON under normal voltage, and OFF in case of open phase or reverse phase. Unbalance: Flash alternately (two quick flashes and one long OFF) Overvoltage: Quick flash Undervoltage: Slow flash
Contact operation indictor R red light	ON when the contact works, and OFF when the contact opens. Flash in operation delay, and OFF after expiration of delay.

TGCR1 Series Control Relay

6.5 Overvoltage and undervoltage protection sequence chart

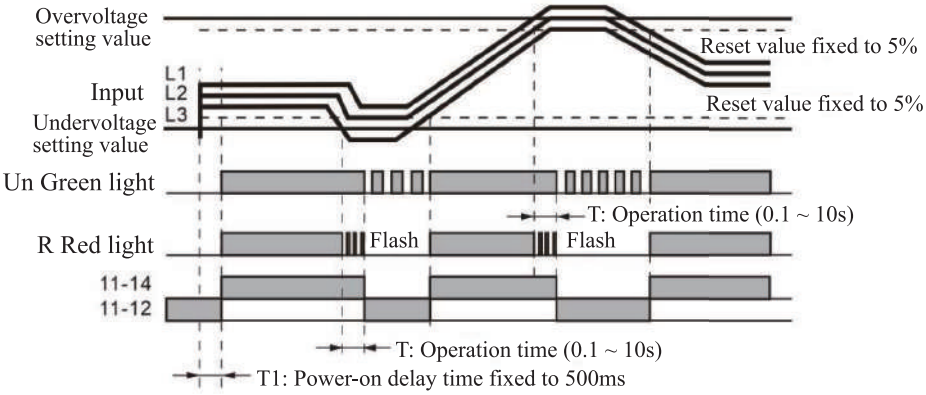

Note 1: The contact is at the operation state under normal input voltage (normally-open ON, normally-closed OFF)

6.6 TGCR1-PM PM2 panel diagram

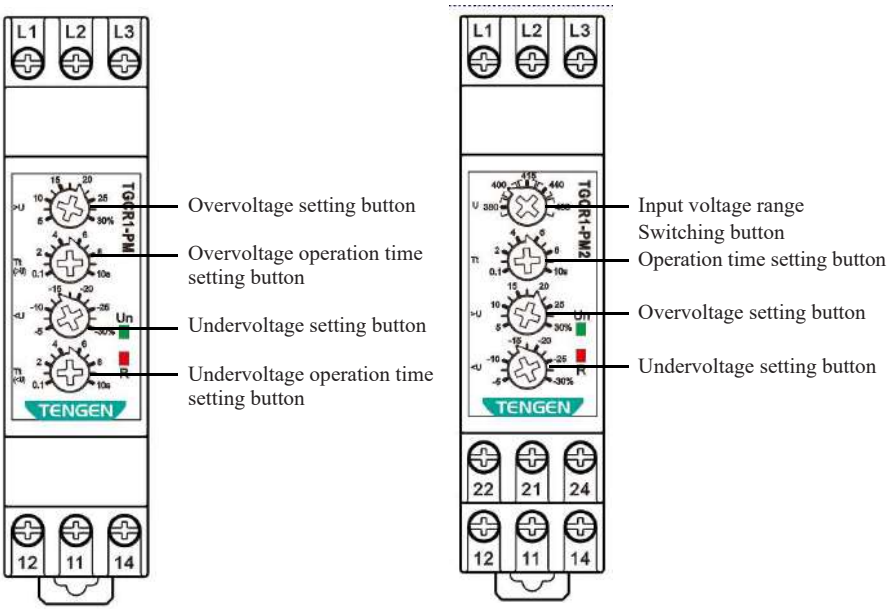

Indicator state

Item	Description
Input voltage indicator Un green light	Normally ON under normal voltage, and OFF in case of open phase or reverse phase. Overvoltage: Quick flash Undervoltage: Slow flash Unbalance: Flash alternately (two quick flashes and one long off)
Contact action indicator R red light	ON when the contact works, and OFF when the contact opens. Flash in operation delay, and off after expiration of delay.

TGCR1 Series Control Relay

7 Troubleshooting and Solutions

General fault analysis and corresponding solution

Fault	Cause	Solution
Un indicator is not lit	L1 L2 L3 open phase	Check input voltage
	L1 L2 L3 reverse phase	Check for normal input voltage and for normal phase sequence; try to exchange any two phase wires at input ends L1 L2 L3;
Un light flashes, and contact does not work	L1 L2 L3 three-phase unbalance (flash alternately)	1. Check for normal input voltage; 2. Overvoltage, undervoltage or unbalance fault occurs, or the current voltage does not reach the return value due to occurred fault, so it is at the fault protection state. Please check all operation value settings meet the requirements according to the specific working conditions, and adjust it to the appropriate setting value if necessary.
	L1 L2 L3 overvoltage (quick flash)	
	L1 L2 L3 overvoltage (flash flash)	
Un light works normally, contact works, R light flashes	R light flashes irregularly	Input voltage at the protection operation threshold

7.1 Turn the button with a screwdriver. When turning to left or to right to the limit position, it will stop rotation by a stop block; at this time, do not apply too large force onto it for rotation.

7.2 Not used at the secondary side of control and inverter of semiconductor switching element.

7.3 To reduce setting error, turn the setting button to the maximum value side from the minimum value side for setting.

7.4 Used to detect the open phase when power-on of motor but unable to detect the open phase during the motor operation.

7.5 Open-phase detection is only used for input connection point at the power side rather than at the load side.

8 Function Confirmation and Setting Method

8.1 Reverse phase sequence: Exchange any two wires of input L1 L2 L3 to change phase sequence, and confirm whether the product works.

8.2 Open phase: Open any phase of input L1 L2 L3, and confirm whether the product works.

8.3 Overvoltage: The overvoltage value is set through the overvoltage setting button (>U)
Setting range: For +5 ~ +30% of rated voltage. At the normal input voltage and product operation state, turn the setting button. When the setting value is below the input value, R light will flash; when the delay expires, the contact will open for reset. For example: For TGCR1-PM, the rated input voltage is 380V, and the setting range is 399 ~ 494V.
Increase the input voltage slowly from the 80% rated voltage, and R light starts to flash when greater than the setting value; at this time, the input value is an overvoltage operation value. When the operation delay expires, the contact will open.

8.4 Undervoltage: The undervoltage setting is adjusted through the undervoltage setting button (<U).
Setting range: For -5 ~ -30% of rated voltage. At the normal input voltage and product operation state, turn the setting button. When the setting value is greater than the input value, R light will flash, and the contact will open for reset. For example: For TGCR1-PM, the rated input voltage is 380V, and the setting range is 361 ~ 266V.
Slowly decrease the input voltage from 120% rated voltage; when below the setting value, R light starts to flash; at this time, the input value is a undervoltage operation value. When the operation delay expires, the contact will open.

Confirmation of overvoltage and undervoltage operation time: Set the overvoltage to +5% to make the input voltage increase to +20% instantly from 80%, and measure the operation time.
Set the undervoltage to -5% to make the input voltage reduce to -20% from 120% instantly, and measure the operation time.

8.5 Unbalance: set the setting range through the unbalance operation value setting button (Asym): for 5% ~ 15% of rated input
For example: For TGCR1-PA, the rated input voltage is 380V, and the setting range is 19 ~ 57V
If set to 10%, the unbalance operation voltage is 38V, and when the difference between the maximum and minimum voltages of three-phase line voltage exceeds 38V, the contact will open. Confirm the operation time to make the difference between the maximum and minimum values of three-phase voltage exceeds the setting value instantly, and measure the operation time.

9 Function Confirmation and Setting Method

Please specify the product model and order quantity when ordering.

For example: To order TGCR1-PM relay, voltage AC380V, 100 pcs;
Please specify: TGCR1-PM AC380V 100 pcs

TVFE9 Series Inverter

1 Overview

TVFE9 series inverter is a high-performance speed sensorless vector inverter independently developed by our company, featuring with good acceleration and deacceleration dynamic performance, high torque output at low speed (0.5Hz, 1.5 times rated torque), high overload capacity, flexible and convenient operation, PID control of positive and reverse directions, small size, and strong environmental adaptation.

This series of product have strong load characteristics, smooth and reliable operation, programmed operation, PID adjustment, textile swing frequency operation, and water supply sleep functions. The product is widely used in electrical drive and automation control fields such as machine tools, textile, water supply, municipal affairs, foods, cements, plate shears, and plastic machinery.

The product is designed and tested in accordance with the international standard and the user's use environment shall be strictly simulated for testing.

2 Type Designation

TVFE9– □□□ □□ □

- □ — Inverter type: G: general type; P: Fan water pump type
- □□ — Voltage grade: S2: single phase 220V; T2: three phase 220V; T3: three phase 380V
- □□□ — Inverter power: For example: 007: 0.75kW; 015: 1.5kW; 110: 11kW
- TVFE9 — Inverter series

3 Technical Parameters

Item		Technical specification
Input	Voltage	Single-phase 220V (-15%~+15%) Three-phase 380V (-15%~+20%) Voltage unbalance ratio <3%
	Freq.	47~63Hz
Output	Voltage	0 ~ input voltage
	Freq.	0Hz~400Hz
Basic functions	Frequency command	Digital setting: 0.01Hz; Simulation setting: Max. frequency x 0.02%
	Control method	Open-looped vector control (SVC); V/F control
	Starting torque	1Hz/150% (SVC)
	Speed adjusting range	1:100 (SVC)
	Speed stabilizing precision	±0.5% (SVC)
	Torque control precision	SVC: ±0.5% (more than 5Hz)
	Torque boost	Torque increased by 0.0%~20.0%
	V/F curve	Four ways: Linear type; multipoint type; complete V/F separation, incomplete V/F separation
	Acceleration and deceleration curves	Straight line or S curve acceleration and deceleration method; Four types of acceleration and deceleration time; acceleration and deceleration time range: 0.0~3600.0s
	DC braking	DC brake starting frequency: 0.00Hz~20.00Hz; Braking time: 0.0s~60.0s; Braking action current value: 0.0%~100.0%
	Jogging control	Jogging frequency range: 0.00Hz~50.00Hz; Jogging acceleration and deceleration time 0.0s~20.0s
	Simple PLC, multi-speed operation	Realize at most 16 speed segments through the built-in PLC or control terminal
	Built-in PID	To easily realize the process control closed-looped control system
	Auto voltage regulation (AVR)	To keep the constant output voltage when the power grid voltage changes

TVFE9 Series Inverter

Continued

Item		Technical specification
Basic functions	Overvoltage and overcurrent speed out-of-limit control	To limit the current and voltage automatically during operation to prevent frequent trip due to overcurrent or overvoltage
	Torque limting and control	In the vector control mode, realize the torque control, and limit the torque automatically during operation to prevent frequent trip due to overcurrent.
Communicaiton function	RS485 bus	Modbus RTU, Modbus ASCII
Operation	Operation command	Operating panel given, control terminal given, serial communication interface given. They can be switched over through multiple ways
	Frequency command	Ten frequency commands: digit given, analog voltage given, analog current given, pulse given, serial port given; they can be switched over through multiple ways
	Aux. frequency command	Five aux. frequency commands to realize the auxiliary frequency fine-turning and frequency symthesis flexibly
	Input terminal	Standard: Seven SI terminals, among them X7 supports the high speed pulse input of up to 10kHz Two AI terminals, with 0~10V voltage input supported, among them A12 supports 0~20mA current input
	Output terminal	Standard: One open collector output terminal One relay output terminal Two AO terminals to support 0~10V voltage output, of which AO2 supports 0~20mA current output
Display and keyboard	LED display	To display parameters
	Key lock and function section	To lock some or all keys, define the function ranges of some keys to prevent misoperation
Protection function	Phase loss protection	Output phase loss protection
	Overcurrent protection	Stop the machine when the current exceeds 2.0 times rated current of inverter for protection
	Overvoltage protection	Stop the machine when the DC voltage is too high in main circuit
	Undervoltage protection	Stop the machine when the DC voltage is too low in main circuit
	Overheat protection	Trip the protection function when the rectifier and inverter modules are overheated
	Overload protection	Stop the machine when running under 150% rated current for 60s
Environment	Application site	Indoors, not subject to direct sunlight, no dust, corrosive gas, flammable gas, oil mist, water stam, water dops, or salt.
	Altitude	Below 1,000 meters; derated by 1% per an increase of 100m for 1,000 meters and above; if more than 3000m, please contact the manufacturer.
	Ambient temp.	-10℃~+40℃; when the ambient temperature is 40℃ or above, derating is required; derated by 1.5% per an increase of 1℃ of ambinet temperature
	Humidity	Less than 90%RH, no condensation
	Vibration	Less than 4.9m/s^2 (0.5g)
	Storage temp.	-20℃~+60℃

TVFE9 Series Inverter

Inverter model	G mode			P mode		
	Input current/A	Output current/A	Adapted motor/kW	Input current/A	Output current/A	Adapted motor/kW
Single-phase power: 220V, 50/60Hz						
TVFE9-2007G	9.2	4.5	0.75	-	-	-
TVFE9-2015G	14.5	7.5	1.5	-	-	-
TVFE9-2022G	23	10	2.2	-	-	-
TVFE9-2040G	35	16	4.0	-	-	-
Three-phase power: 380V, 50/60Hz						
TVFE9-4007G	4.3	2.5	0.75	-	-	-
TVFE9-4015G	5.2	3.8	1.5	-	-	-
TVFE9-4022G	6	5.5	2.2	-	-	-
TVFE9-4040G	10.5	9	3.7	-	-	-
TVFE9-4055P	-	-	-	14	11	5.5
TVFE9-4055G/4075P	15.5	13	5.5	20.5	17	7.5
TVFE9-4075G/4110P	20.5	17	7.5	27.5	22	11
TVFE9-411OG/4150P	27.5	24	11	37.1	30	15
TVFE9-4150G/4185P	37.1	30	15	41.9	36	18.5
TVFE9-4185G/4220P	41.9	39	18.5	49.3	45	22
TVFE9-4220G	49.3	45	22	-	-	-
TVFE9-4300P	-	-	-	65.7	56	30
TVFE9-4300G/4370P	65.7	60	30	80.6	72	37
TVFE9-4370G	80.6	75	37	-	-	-
TVFE9-4450P	-	-	-	96.4	80	45
TVFE9-4450G/4550P	96.4	91	45	117.6	110	55
TVFE9-455OG/4750P	117.6	110	55	166.4	130	75
TVFE9-4750G/490OP	166.4	150	75	184.3	176	90
TVFE9-4900G/41100P	184.3	176	90	226.8	210	110
TVFE9-4110OG/41320P	226.8	210	110	268.1	230	132
TVFE9-41320G/4160OP	268.1	253	132	321.1	304	160
TVFE9-4160OG/41850P	321.1	304	160	368	340	185
TVFE9-41850G/420OOP	368	340	185	406.6	380	200
TVFE9-42000G/42200P	406.6	380	200	442.7	420	220
TVFE9-42200G/4250OP	442.7	426	220	503	470	250
TVFE9-42500G/4280OP	503	470	250	555.9	480	280
TVFE9-42800G/43150P	555.9	520	280	650.7	585	315
TVFE9-43150G	650.7	585	315	-	-	-
TVFE9-43550G/44000P	754.5	650	355	797.6	730	400
TVFE9-44000G	797.6	730	400	-	-	-
TVFE9-44500G	846	830	450	-	-	-
TVFE9-45000G	885	860	500	-	-	-
TVFE9-45600G	990	950	560	-	-	-
TVFE9-46300G	1150	1100	630	-	-	-

TVFE9 Series Inverter

4 Wiring Diagram

4.1 Basic wiring diagram

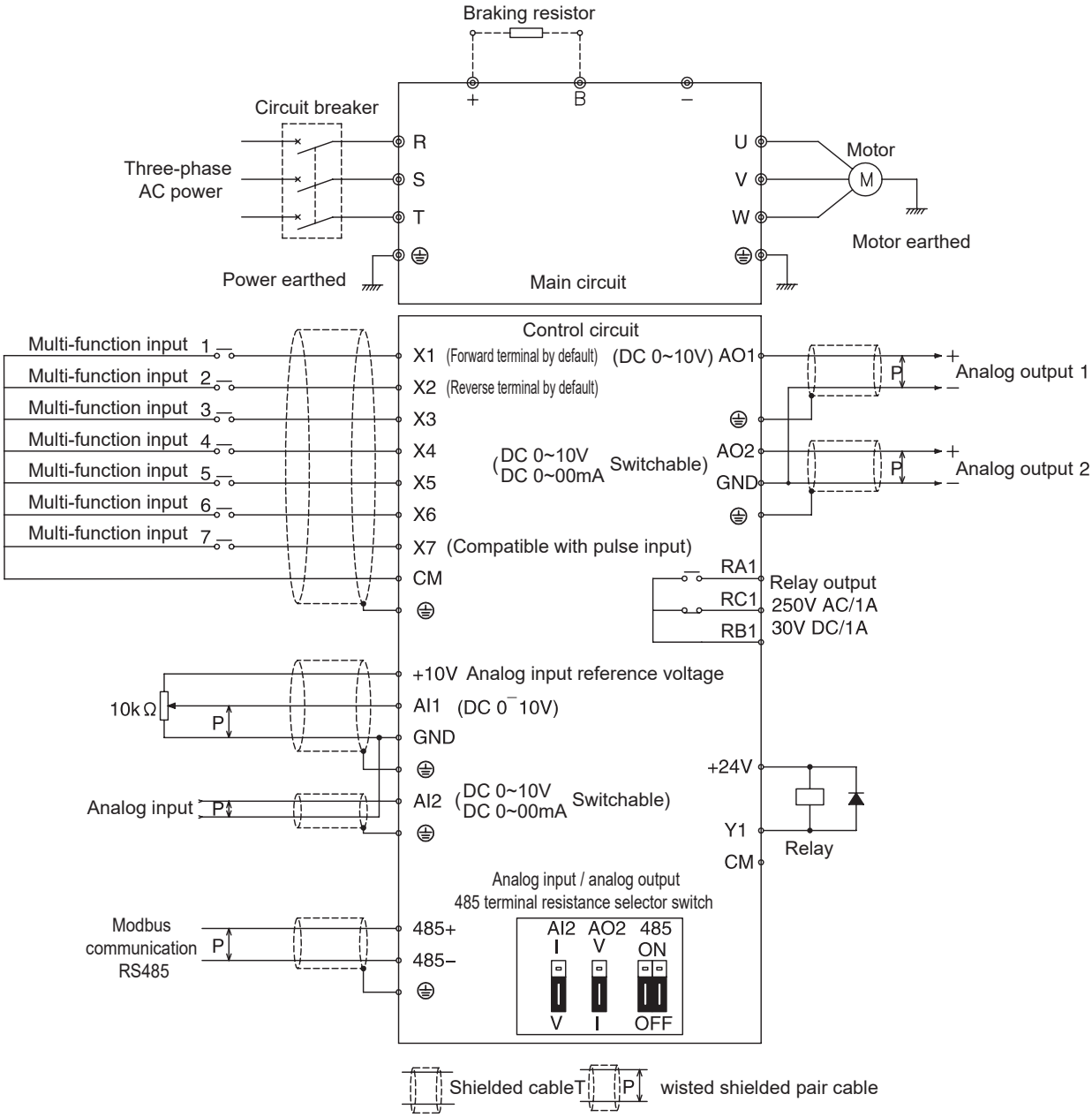

TVFE9 Series Inverter

5 Outline and Installation Dimensions

TVFE9-2007G~TVFE9-2040G and TVFE9-4007G~TVFE9-4075G Outline dimension diagram

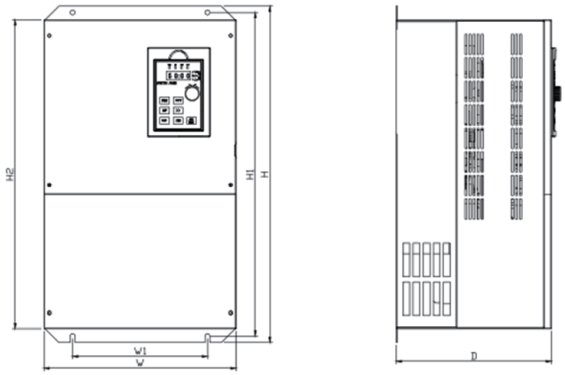

TVFE9-4110G~TVFE9-41600G Outline dimension diagram

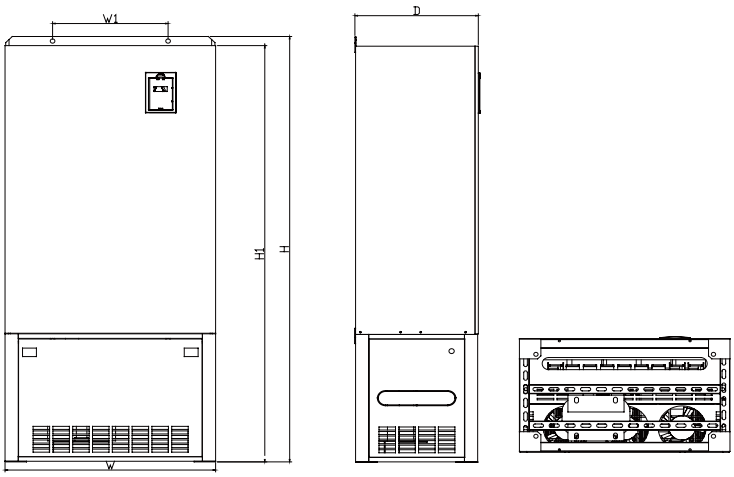

TVFE9-41850G~TVFE9-46300G Outline dimension diagram

TVFE9 Series Inverter

Inverter model	Outline and installation dimensions							
	W	H	D	W1	H1	D1	H2	Mounting hole
Single-phase/three-phase power: 220V, 50/60Hz								
TVFE9-2007G	118.5	185	159	106.5	174.5	150	-	5.5
TVFE9-2015G								
TVFE9-2022G								
TVFE9-2040G	150	258	183.8	136.8	254	175.3	-	5.5
Three-phase power: 380V, 50/60Hz								
TVFE9-4007G	118.5	185	159	106.5	174.5	150	-	5.5
TVFE9-4015G								
TVFE9-4022G								
TVFE9-4040G	118.5	195	169	106.5	184.5	160	-	5.5
TVFE9-4055P								
TVFE9-4055G/4075P								
TVFE9-4075G/4110P	150	258	184	137	254	175	-	5.5
TVFE9-4110G/4150P								
TVFE9-4150G/4185P	210	335	207.5	150	319	194	300	7
TVFE9-4185G/4220P								
TVFE9-4220G	221	382	232.5	160	365.5	219	344	8
TVFE9-4300P	280	480	241.5	200	460	230	440	7
TVFE9-4300G/4370P								
TVFE9-4370G								
TVFE9-4450P	352	585	287.5	220	559	374	538	10
TVFE9-4450G/4550P								
TVFE9-4550G/4750P								
TVFE9-4750G/4900P	384	650	303	300	628	-	-	8
TVFE9-4900G/41100P	485	760	326	325	739	-	-	12
TVFE9-41100G/41320P								
TVFE9-41320G/41600P	533	830	405	325	809	-	780	12
TVFE9-41600G/41850P								
TVFE9-41850G/42000P	638	1402	374	-	1372	-	-	14
TVFE9-42000G/42200P								
TVFE9-42200G/42500P								
TVFE9-42500G/42800P	700	1627	460	-	1592	-	-	14
TVFE9-42800G/43150P								
TVFE9-43150G								
TVFE9-43550G/44000P	800	1772	500	-	1737	-	-	14
TVFE9-44000G								
TVFE9-4450OG	1200	2000	568	-	-	-	-	14
TVFE9-45000G								
TVFE9-45600G								
TVFE9-46300G								

Size of hole on the external key tray: 79.5mm*121mm

TVFE9 Series Inverter

6 Application

7.1 Fans: boiler fan, roots fan, air exchange fan, and air conditioner fan.
7.2 Water pump: submersible pump, vacuum pump, cooling pump, and circulating water pump
7.3 Machine tools: lathe, planer, grinder, and engraving machine
7.4 Wood working machinery: rotary cutter, and plate cutting machine
7.5 Textile machinery: spinning frame, winding machine.
7.6 Other machinery: film blowing machine, plastic extruder, block making machine, ball grinding mill, and escalator.

7 Ordering Notice

Please specified the required model and specification according to the model and meaning instructions when ordering:
For example: 4.0KW common inverter: TVFE9-4040G.

TVF300 Series High-Performance Vector Inverter

1 Overview

TVF300 series is a new platform vector inverter developed by Tengen Electric Company. Based on the new generation low-loss IGBT module, the product uses advanced current vectoring control algorithm, high-power density structure design, high-efficient heat radiation structure design, reliable hardware circuit design, and modular design and the driving capacity of motor is maximized to satisfy the increasing diversity and specialization needs of user.

2 Type Designation

TVF300 – □□□ □ □ □ □

- L: DC reactor; Empty: None
- B: Brake unit; Empty: None
- Inverter type: G: general type; P: Fan water pump type
- Voltage grade: S2: single phase 220V; T2: three phase 220V; T3: three phase 380V
- Inverter power: For example: 007: 0.75kW; 015: 1.5kW; 110: 11kW
- Inverter series

3 Technical Parameters

Item name		Spec.	
Input	Voltage	Single-phase 220V (-15% ~ +15%)	
		Three-phase 380V (-15% ~ +20%)	
	Freq.	47~63Hz, voltage unbalance ratio: <3%	
Output	Voltage	0~Input voltage	
	Freq.	0Hz ~ 500Hz	
Basic functions	Frequency command	Digital setting: 0.01Hz; simulation setting: Max. freq. × 0.02%	
	Control mode	Open-loop vector control (SVC); Closed-loop vector control (FVC); V/F control	
	Starting torque	0.3Hz/150% (SVC); 0Hz/180% (FVC)	
	Speed regulation range	1:200 (SVC)	1:1000 (FVC)
	Speed steady accuracy	±0.5% (SVC)	±0.02% (FVC)
	Speed control accuracy	SVC: ±5% (Above 5Hz); FVC: ±3%	
	Torque boost	Auto torque boost: the manual torque is increased by 0.1% to 30.0%	
	V/F curve	Four modes: linear type; multi-point type; complete V/F separation; incomplete V/F separation	
	Acceleration-deceleration curve	Linear or S-curve acceleration and deacceleration ways; Four types of acceleration and deacceleration time; acceleration and deacceleration time range: 0.0~6500.0s	
	DC brake	DC brake starting frequency: 0.00Hz ~ Max. freq.; brake time: 0.0s~36.0s; brake action current: 0.0% ~ 100.0%	
	Inching control	Inching frequency range: 0.00Hz ~ 50.00Hz; inching acceleration and deacceleration time: 0.0s ~ 6500.0s	

TVF300 Series High-Performance Vector Inverter

Continued

Item name		Spec.
Basic functions	Single PLC, multi-speed operation	Realize the 16-speed operation through the built-in PLC or control terminal
	Built-in PID	Easily realize the process control closed-loop control system
	Auto voltage regulation (AVR)	The constant output voltage can be maintained automatically when the power voltage changes
	Overvoltage, overcurrent, and stall control	Automatic limit of current and voltage during operation to prevent the frequent trip due to overcurrent or overvoltage
	Rapid current limiting function	Minimize overcurrent fault, and ensure the normal operation of inverter
	Torque limit and control	In the vector control mode, the torque control can be realized; automatic limit of torque during operation to prevent frequent trip due to overcurrent
Personalized functions	Field bus	Modbus
	Multi-encoder support	With differential ABZ encoder supported
	Multi-motor switching	Two sets of motor parameters to realize the control of switching between two motors
	Not stop due to momentary interruption	Compensation of the voltage reduction through the load feedback energy in the event of momentary interruption to maintain the continued operation of inverter in a short time
	Timing control	Timing control function: Set time range: 0.0 minute ~ 6500.0 minutes
	Motor overheat protection	Optional IO expansion card; analogy input AI3 can receive the motor temperature sensor input (PT100, PT1000)
	Virtual IO	5 sets of virtual DI DO to realize the simple logic control
Operation	Operation command	Operation panel given, control terminal given, serial communication port given. Switched via the multiple ways
	Freq. command	10 freq. commands: digit given, analog voltage given, analog current given, pulse given, and serial port given; switched via the multiple ways
	Aux. freq. command	10 aux. freq. commands. Flexibly realize the fine regulation of aux. frequency and the frequency synthesis
	Input terminal	Standard: Five DI terminals, with one used to support the high-speed pulse input at max. 100kHz Two AI terminals used to support 0~10V voltage input or 0~20mA current input Expansion capacity: Four DI terminals One AI terminal used to support -10V ~ 10V voltage input and also support PT100/PT1000
	Output terminal	Standard: One high-speed pulse output terminal (with open-circuit collector type optional) to support 0~100kHz square wave output One relay output terminal One AO terminal to support 0~20mA current output or 0~10V voltage output Expansion capacity: One relay output terminal One AO terminal to support 0~20mA current output or 0~10V voltage output

TVF300 Series High-Performance Vector Inverter

Continued

Item name		Spec.
Display and keyboard	LED display	To display parameters
	Key lock and function selection	To lock the keys partially or fully; to define the function range of some keys to prevent misoperation
Protection function	Open-phase protection	Output open-phase protection
	Overcurrent protection	Shutdown if exceeding 2.5 times rated current of inverter for protection
	Overvoltage protection	Shutdown if the DC voltage of main circuit is too high
	Undervoltage protection	Shutdown if the DC voltage of main circuit is too low
	Overheat protection	Protection will be activated if the rectifier or inverter module is overheated
	Overload protection	Shutdown after 60s operation at the 150% rated current
	Short-circuit protection	Output interphase short-circuit protection; output-to-ground short-circuit protection
Environment	Working site	Indoors, prevent direct sunlight, free of dust, corrosive gas, combustible gas, oil mist, water steam, water drops, or salts
	Altitude	Below1000m; degraded by 1%/100m height if more than 3,000m
	Ambient temperature	-10℃~+45℃; when the ambient temperature is above 45℃, please degrading; degraded by 1.5% per 1℃ ambient temperature rise
	Humidity	Less than 95%RH, no condensation
	Vibration	Less than 5.9m/s^2 (0.6g)
	Storage temperature	-20℃ ~ +60℃

4 Model Selection

Inverter model	Power capacity kVA	Input current A	Output current A	Adapted motor kW	Structure model
Single-phase power: 220V, 50/60Hz					
TVF300-0R75S2GB	1.5	8.2	4	0.75	A
TVF300-01R5S2GB	3	14	7	1.5	
TVF300-02R2S2GB	4	23	9.6	2.2	B
TVF300-03R7S2GB	5.9	33	17	3.7	C

TVF300 Series High-Performance Vector Inverter

Continued

Inverter model	Power capacity kVA	Input current A	Output current A	Adapted motor kW	Structure model
Three-phase power: 380V, 50/60Hz					
TVF300-0R75T3GB	2.8	2.4	2.1	0.75	A
TVF300-01R5T3GB	5	4.6	3.8	1.5	
TVF300-02R2T3GB	6.7	6.3	5.1	2.2	
TVF300-03R7T3GB	12	11.4	9	3.7	B
TVF300-05R5T3GB	17.5	16.7	13	5.5	
TVF300-07R5T3GB	22.8	21.9	17	7.5	C
TVF300-0011T3GB	33.4	32.2	25	11	
TVF300-0015T3GB	42.8	41.3	32	15	D
TVF300-18R5T3GB	45	49.5	37	18.5	
TVF300-0022T3GB	54	59	45	22	
TVF300-0030T3GB	73	78	60	30	E
TVF300-0037T3G*	63	69	75	37	F
TVF300-0045T3G*	81	89	90	45	
TVF300-0055T3GL*	97	113	110	55	
TVF300-0075T3GL*	127	157	152	75	G
TVF300-0090T3GL*	150	180	176	90	
TVF300-0110T3GL	179	214	210	110	H
TVF300-0132T3GL	220	256	253	132	
TVF300-0160T3GL	263	307	304	160	
TVF300-0200T3GL	334	385	380	200	I
TVF300-0220T3GL	375	430	426	220	
TVF300-0250T3GL	404	468	465	250	
TVF300-0280T3GL	453	525	520	280	
TVF300-0315T3GL	517	580	585	315	
TVF300-0355T3GL	565	617	650	355	J
TVF300-0400T3GL	629	687	725	400	

Note: The built-in braking unit of 37kW~90kW inverter is optional.

5 Basic Wiring Diagram

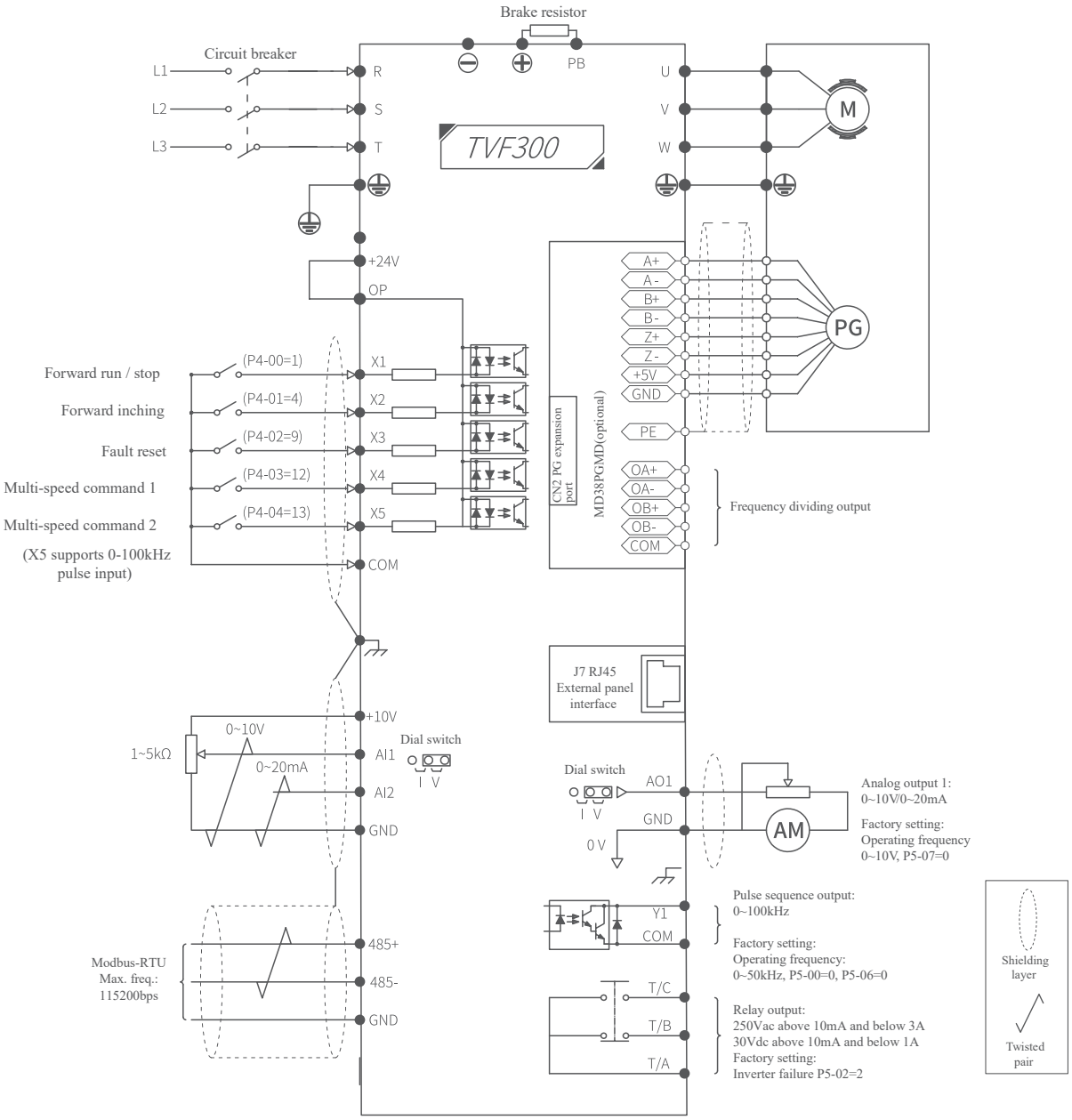

TVF300 Series High-Performance Vector Inverter

6 Outline and Installation Dimensions

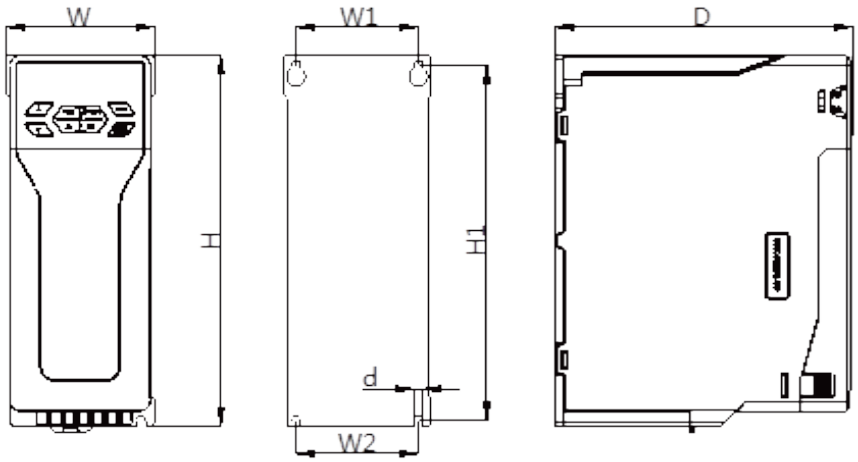

Fig. 1 Dimensional diagram for A, B, C, D, and E types

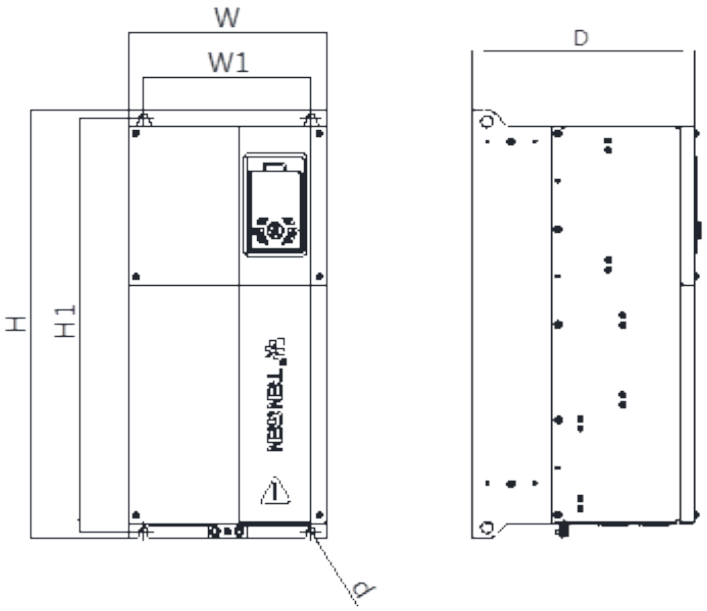

Fig. 2 Dimensional diagram for F, G, H, I, and J types

TVF300 Series High-Performance Vector Inverter

Structure model	Dimensions/mm			Mounting hole/mm			Mounting hole diameter/mm
	H	W	D	H1	W1	W2	
A*	200	80	160	192	66	—	φ5
B*	240	100	160	230	85	—	φ5
C*	320	120	180	310	105	—	φ5
D	380	140	200	370	125	125	φ7
E	380	140	230	370	125	125	φ7
F	540	250	280	520	210	210	φ10
G	600	320	310	580	270	270	φ10
H	760	390	350	740	300	300	φ12
I*	1150 (1490)	550	420	1120	380	380	φ13
J*	1200 (1633)	800	472	1165	500	500	φ15

Note 1: A type, B type, and C type structure has only one mounting hole at the bottom;

Note 2: The structure is iron shell for F type and above;

Note 3: I type structure can have an optional base, with its height H of 1490 including base; the fixed holes are shown in Fig. 3;

Note 4: J type structure has a base as standard configuration, with its height H of 1633 including base; the fixed holes are shown in Fig. 4.

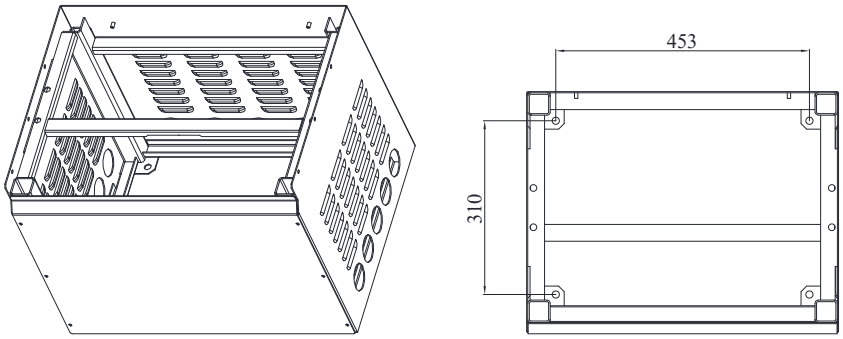

Fig. 3 Dimensional diagram for I type with an optional base

TVF300 Series High-Performance Vector Inverter

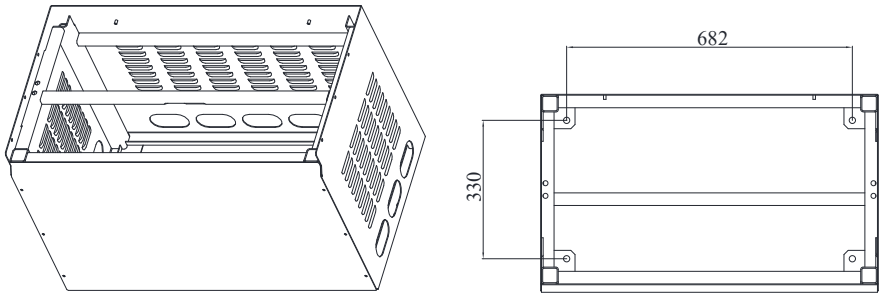

Fig. 4 Dimensional diagram for J type with an optional base

TGS3 Series Soft Starter

1 Overview

With the advanced CPU control technology as core, TGS3 series soft softer can realize the soft startup and soft stop of (squirrel cage) 3-phase AC asynchronous motor by controlling the SCR module and has multiple optional protection functions such as overload, input phase loss, output phase loss, load short circuit, starting current-limit overtime, overvoltage, and undervoltage protections. This product is mainly used together with a complete set of control cabinet. To ensure normal operation, a bypass AC contactor of the corresponding specification must be provided. The product specification covers 11kW~400kW (squirrel cage) 3-phase AC asynchronous motor that is an electrical drive equipment widely used in many industrial fields such as metallurgy, petroleum, fire control, mines, and petrochemical. This product is the most ideal replacement product for traditional star-delta start and self-coupling reduced-voltage start.

2 Type Designation

TG S 3 – □□□ – □

- Available voltage grade: 3: AC380V (default)
  6: AC660V
- Adaptive motor power: 055 : 55kW
- Product design series: 3 series
- Product type: S: Solid-state intelligent soft starter
- Enterprise characteristic code

3 Technical parameters and performance

- Power voltage: Mains, captive power plant, diesel generator set: three-phase AC 380V± 15%, 50Hz; the power capacity should meet the starting requirements of soft starter for motor.
- Starting current limit: 0.5~5 times starting current limit
- Slope descent time: 0s~60s.
- Soft start reference voltage: 30%Ue~80%Ue.
- Jump start time: 0.1s.
- Environmental requirements
  If the altitude exceeds 1000 meters, the capacity should be reduced accordingly, and if above 1000 meters, the current will be reduced by 0.5% for each 100 m increase;
  The ambient temperature is ranged -10 °C ~ 40 °C; Relative humidity does not exceed 95%;
  Installed in the well-ventilated indoor environment where there is no condensation, no flammable and explosive gases, and no conductive dust.

4 Outline and Installation Dimensions

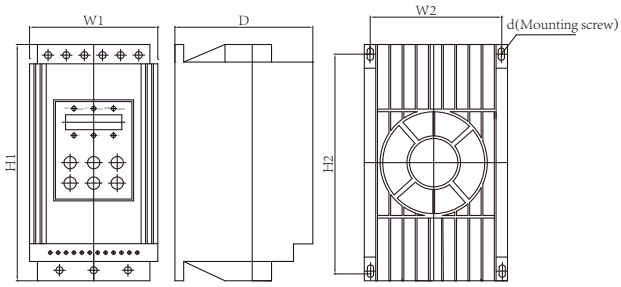

Fig. 1

TGS3 Series Soft Starter

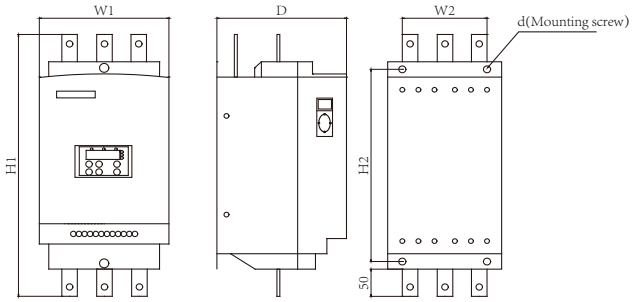

Fig. 2

Spec. & Model	Rated power (kW)	Rated current (A)	Outline and installation dimensions (mm)						Approx. weight (kg)	Outline drawing
			W1	H1	D	W2	H2	Mounting hole d		
TGS3-011-3	11	23	146	270	165	132	246	M6	<4	Fig. 1
TGS3-015-3	15	30	146	270	165	132	246	M6	<4	Fig. 1
TGS3-18.5-3	18.5	37	146	270	165	132	246	M6	<4	Fig. 1
TGS3-022-3	22	43	146	270	165	132	246	M6	<4	Fig. 1
TGS3-030-3	30	60	146	270	165	132	246	M6	<4	Fig. 1
TGS3-037-3	37	75	146	270	165	132	246	M6	<4	Fig. 1
TGS3-045-3	45	90	146	270	165	132	246	M6	<4	Fig. 1
TGS3-055-3	55	110	146	270	165	132	246	M6	<4	Fig. 1
TGS3-075-3	75	150	146	270	165	132	246	M6	<4	Fig. 1

Spec. & Model	Rated power (kW)	Rated current (A)	Outline and installation dimensions (mm)						Approx. weight (kg)	Outline drawing
			W1	H1	D	W2	H2	Mounting hole d		
TGS3-090-3	90	180	261	530	195	197	378	M8	<20	Fig. 2
TGS3-115-3	115	230	261	530	195	197	378	M8	<20	Fig. 2
TGS3-132-3	132	264	261	530	195	197	378	M8	<20	Fig. 2
TGS3-160-3	160	320	261	530	195	197	378	M8	<20	Fig. 2
TGS3-185-3	185	370	261	530	195	197	378	M8	<20	Fig. 2
TGS3-200-3	200	400	261	530	195	197	378	M8	<20	Fig. 2
TGS3-250-3	250	500	290	570	251	220	470	M8	<20	Fig. 2
TGS3-280-3	280	560	290	570	251	220	470	M8	<20	Fig. 2
TGS3-320-3	320	640	290	570	251	220	470	M8	<20	Fig. 2
TGS3-355-3	355	710	400	570	251	220	470	M8	<20	Fig. 2

TGS51 Series Enclosed Direct-on-line (DOL) Stater

1 Overview

TGS51 series Enclosed Direct-on-line (DOL) Staters is mainly used to directly control the start, stop, positive rotation and inverse rotation of three-phase squirrel cage induction motor with AC 50Hz (or 60Hz), rated working voltage up to 380V and current up to 150A, and has no-voltage and overload protection functions. If equipping with a phase loss thermal relay, this stater has phase loss protection function.
Standard: IEC 60947-4-1.

2 Type Designation

TG S 51 □ – □ / □

- H : protected irreversible type
- NH: protected reversible type
- Starter grade (2~7)
- Derived code B: button type
- Design code
- Starter
- Enterprise characteristic code

3 Technical Parameters

3.1 The capacities of control motors are listed in Table below.

Model	Rated current A	Max. power of controllable motor, Pe, KW	
		220V	380V
TGS51-2 TGS51B-2	10	2. 2	4
TGS51-3 TGS51B-3	20	5. 8	10
TGS51-4 TGS51B-4	40	11	20
TGS51-5 TGS51B-5	60	17	30
TGS51-6 TGS51B-6	100	28	50
TGS51-7 TGS51B-7	150	43	75

3.2 Contactors and thermal relays for starter are listed in Table below

Model	Matched contactor	Matched thermal relay	Setting current range of thermal relay (A)	TGS51B supporting buttons
TGS51-2	CJT1-10	TGR36-32	0. 25～0. 35、0. 32～0. 5、0. 45～0. 72 0. 68～1. 1、1～1. 6、1. 5～2. 4、2. 2～3. 5 3. 2～5、4. 5～7. 2、6. 8～11	LAY5-BE101 and LAY5-BE102
TGS51B-2				
TGS51-3	CJT1-20	TGR36-32	6. 8～11 10～16 14～22	
TGS51B-3				
TGS51-4	CJT1-40	TGR36-63	14～22 20～32 28～45	
TGS51B-4				
TGS51-5	CJT1-60	TGR36-63	28～45 40～63	
TGS51B-5				
TGS51-6	CJT1-100	TGR36-160	40～63 53～85 75～120	
TGS51B-6				
TGS51-7	CJT1-150	TGR36-160	75～120 100～160	
TGS51B-7				

TGS51 Series Enclosed Direct-on-line (DOL) Stater

4 Operating Conditions

4.1 Altitude: Not exceed 2,000 meters.
4.2 Ambient air temperature: The upper limit does not exceed +40℃; the lower limit does not below -5℃ (-10℃ or -25℃ is also available, but this shall be specified when ordering from the manufacturer).
4.3 Atmospheric conditions: The relative humidity of atmosphere does not exceed 50% at the maximum ambient temperature of +40℃, and a higher relative humidity at the lower temperature may be allowed; the mean monthly maximum relative humidity at the mean monthly temperature +25℃ in the wettest month can be up to 90%. The necessary measures can be taken for condensation on the product surface due to temperature changes.
4.4 Pollution class: Class 3.
4.5 Installation category: III
4.6 The inclination with the vertical plane does not exceed 5° when installation.

5 Structure Features

The basic structure of the Enclosed Direct-on-line (DOL) Staters is a combination of AC contactor and thermal relay together with the mounting plate and protective cover used for installation, with one AC contactor required for irreversible type and two AC contactors required for reversible type; the controllable motor can rotate positively and reversely. TGS51B is of the button type, with 2~3 buttons LAY5-BE101 and LAY5-BE102 (two for reversible type)

6 Outline and Installation Dimensions

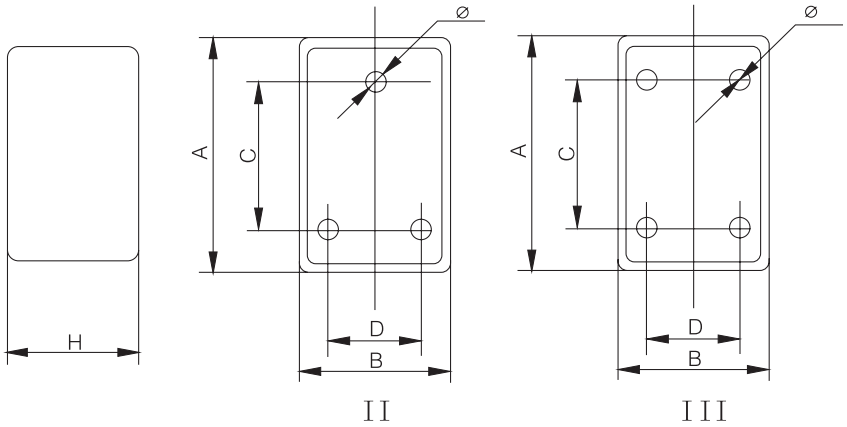

Outline and installation dimensional drawings of starter

TGS51 Series Enclosed Direct-on-line (DOL) Stater

Model & Spec.			A	B	C	D	H	F	F	Hole type
TGS51-2 TGS51B-2	Protected type	H	$206^{+2.9}_{0}$	$114^{+2.2}_{0}$	150 ± 0.5	60 ± 0.37	130 ± 2.7	$6^{+0.48}_{0}$	—	II
		NH	$190^{+2.9}_{0}$	$175^{+2.5}_{0}$	150 ± 0.5	130 ± 0.5	110 ± 2.7	$6^{+0.48}_{0}$	—	II
TGS51-3 TGS51B-3	Protected type	H	$239^{+2.9}_{0}$	$135^{+2.5}_{0}$	175 ± 0.5	80 ± 0.37	137 ± 3.15	$6^{+0.48}_{0}$	—	II
		NH	$220^{+2.9}_{2}$	$225^{+2.9}_{2}$	165 ± 0.5	170 ± 0.5	136 ± 3.15	$6^{+0.48}_{0}$	—	III
TGS51-4 TGS51B-4	Protected type	H	$292^{+3.2}_{0}$	$151^{+2.5}_{2}$	230 ± 0.575	100 ± 0.435	161 ± 3.15	$6^{+0.48}_{0}$	—	II
		NH	$270^{+3.2}_{0}$	$282^{+3.2}_{0}$	218 ± 0.575	200 ± 0.575	158 ± 3.15	$6^{+0.48}_{0}$	—	III
TGS51-5 TGS51B-5	Protected type	H	$388^{+3.6}_{0}$	$223^{+2.9}_{0}$	315 ± 0.65	150 ± 0.5	165 ± 3.15	$7^{+0.58}_{0}$	—	III
		NH	$560^{+4.4}_{0}$	$210^{+2.9}_{0}$	500 ± 1.25	120 ± 0.5	160 ± 3.15	$7^{+0.58}_{0}$	—	III
TGS51-6 TGS51B-6	Protected type	H	$425^{+4.0}_{0}$	$273^{+3.2}_{0}$	350 ± 0.7	210 ± 0.575	180 ± 3.15	$9^{+0.58}_{0}$	—	III
		NH	$690^{+5.0}_{0}$	$286^{+3.2}_{0}$	585 ± 0.875	210 ± 0.575	175 ± 3.15	$9^{+0.58}_{0}$	—	III
TGS51-7 TGS51B-7	Protected type	H	$425^{+4.0}_{0}$	$273^{+3.2}_{0}$	350 ± 0.7	210 ± 0.575	180 ± 3.15	$9^{+0.58}_{0}$	—	III
		NH	$690^{+5.0}_{0}$	$280^{+3.2}_{0}$	585 ± 0.875	210 ± 0.575	175 ± 3.15	$9^{+0.58}_{0}$	—	III

Note: 1. Dimension H listed in table refers to the height of TGS51, and dimension H for TGS51B shall be a total of the value listed in table and 10mm.

7 Ordering Notice

7.1 Complete mode, name, and specification of starter (for expression method, refer to Model and Meaning section).

7.2 Unless otherwise specified by user, the rated control power voltage (that is, sucking coil voltage) refers to the volage of main circuit, and the frequency is 50Hz.

7.3 The rated working current of motor used by user shall be within the setting current range of the thermal component of thermal relay. The starter can be assembly with thermal relay of the thermal element within the different setting current range, as shown in Table 2; unless otherwise specified by user, the thermal relay of the thermal element with max. control power can be assembled.

7.4 Order quantity

For example: for Enclosed Direct-on-line (DOL) Staters TGS51-3/H with coil voltage 380V, 50Hz and with the thermal element setting current ranged 10A to 16A: 10 units

For example: for Enclosed Direct-on-line (DOL) Staters TGS51B-4/H with coil voltage 380V, 50Hz and with the thermal element setting current ranged 20A to 32A: 10 units

TGK1 Series Control and Protection Switchgear

1 Overview

1.1 Products and applications

TGK1 series control and protection switchgear (CPS) (hereinafter referred to as "switch") is mainly used in AC 50Hz (60Hz) circuit with rated working voltage up to 690V, rated working current 1A to 125A, controller setting current 0.4A to 125A, and control motor power 0.12kW to 55kW for powering on, carrying and breaking the current under normal conditions (including the specified overload conditions), and also can power on and carry the current for some and break the current under the specified abnormal conditions (such as short-circuit).

The switch adopts a modular integrated structure, integrating main functions of many parts such as circuit breakers, contactors, overload relays, starters, and isolators with remote automatic control and local direct manual control, panel indication and electro-mechanical signal alarm, overvoltage and undervoltage protection and open-phase and phase-loss protection functions.

The switch has advantages of small volume, high reliability, high short-circuit breaking capacity, and short flashover distance with inverse-time overload long delay, short-circuit short delay, instantaneous short-circuit protection, and fast short-circuit protection. Functions can be selected as required to provide complete protection for various motor starting and control circuits and power distribution circuits with accurate and reliable actions.

TGK1 series products are mainly composed of body housing, electromagnetic transmission mechanism, operating mechanism, main circuit contact group, intelligent trip unit, and auxiliary contact for local or remote power-on and power-off of control circuit.

TGK1 series switches are widely used in the following occasions or systems:

- Power distribution and motor protection and control systems in fields such as iron & steel, petrochemical, mining, ports, and transportation;
- Power distribution and motor protection and control systems in large venues such as urban streets, hospitals, schools, cultural and sports centers, and commercial centers;
- Power distribution and motor protection and control systems for data information and communication, water supply and drainage, and fire protection;
- Power distribution and motor protection and control systems in commercial and residential buildings, and infrastructure;
- Motor control centers (MMC) and power distribution centers of various units;
- Widely used in power distribution lighting circuits to provide circuit control and protection;
- Widely used in the fire protection system of buildings to provide control and protection for circuits such as fire water pumps and fire fans;
- Control and protection of power distribution circuits and motors in various professional equipment.

1.2 Standard

IEC60947-6-2 Low-voltage switchgear and controlgear - Part 6-2: Multiple function equipment - Control and protective switching devices

2 Type Designation

TG K 1 - □ □/□ □/□ □ □

- Additional function code: G-basic type (with isolation function as standard configuration); F – Fire protection type; L – Electric leakage type; T – Communication type
- Control power voltage model: M-230V; Q-400V
- Auxiliary contact group code: 06: 3NO+1NC + 1 obstacle trip + 1 fault alarm
- Rated working current Ie(A): 1, 3, 6, 12, 16, 25, 32, 45, 63, 80, 100, 125
- Load category code: M-motor protection; L-power distribution protection
- Breaking capacity code: C-15kA; Y-35kA
- Frame current Inm(A): 45, 125
- Design code
- Control and protection switching device (CPS)
- Enterprise code

TGK1 Series Control and Protection Switchgear

3 Technical Parameters

3.1 Main circuit parameters

Table 1

Rated power voltage Ue	TGK1-45								TGK1-125			
Rated working voltage Ue(V)	400、690/50Hz											
Rated insulation voltage Ui(V)	690								690			
Rated impulse withstand voltage Uimp(kV)	4								6			
Resistive current Ith(A)	16					45			80		125	
Rated working current Ie(A)	1	3	6	12	16	25	32	45	63	80	100	125
Use category	AC-43，AC-44											
Number of poles	3P											

3.2 Controller setting current

Table 2

Frame grade	Rated working current Ie(A)	Rated current of controller Iet(A)	Overload setting current Ir1 range (A)	Controllable motor power Pe(kW) (400V)
45	1	1	0.4 ～ 1	0.12 ～ 0.3
	3	3	1.2 ～ 3	0.37 ～ 1.2
	6	6	2.4 ～ 6	1.0 ～ 2.7
	12	12	4.8 ～ 12	2.2 ～ 5.5
	16	16	6.4 ～ 16	3.0 ～ 7.5
	25	25	10 ～ 25	5.0 ～ 12
	32	32	12.8 ～ 32	6.5 ～ 15
	45	45	18 ～ 45	9.0 ～ 22
125	63	63	25 ～ 63	12 ～ 30
	80	80	32 ～ 80	15 ～ 37
	100	100	40 ～ 100	22 ～ 45
	125	125	50 ～ 125	27 ～ 55

3.3 Control electromagnet action conditions

Table 3

Rated control power voltage Us		Appoint action	Action voltage range
M:AC230V	Q:AC400V	TGK1 closed reliably	（85% ～ 110%）Us
		TGK1 disconnected or released	（20% ～ 75%）Us

3.4 Electrical life

Table 4

Model		TGK1-45	TGK1-125
Electric life (10,000 times)	AC-43	100	30
	AC-44	3	2
Mechanical life (10,000 times)		1,000	300
Work system level (intermittent work system)		300 load factor 40%	120 load factor 25%

TGK1 Series Control and Protection Switchgear

3.5 Time-current action characteristics

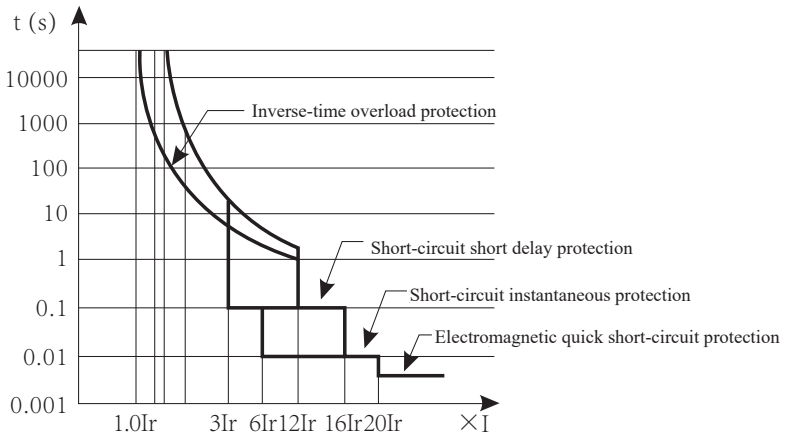

4 Operating Conditions

4.1 Ambient air temperature
The upper limit does not exceed +40℃; the lower limit is not below -5℃; the daily average does not exceed +35℃; when the ambient air temperature is out of the range, the user shall contact the manufacturer for agreement.

4.2 The altitude of the installation site does not exceed 2,000 meters. If exceeded, select the model according to the altitude correction factor.

4.3 Atmospheric conditions
When the ambient air temperature is +40℃, the relative humidity of the atmosphere does not exceed 50%; a higher relative humidity at a lower temperature is allowed. When the monthly average minimum temperature is +25℃, the monthly average maximum relative humidity is 90%, and special measures must be taken for condensation on the product due to temperature changes.

4.4 Pollution degree: 3

4.5 Installation category: Class III

4.6 Protection grade: IP20

4.7 EMC: Environment B

4.8 Non thermal memory electronic type

5 Setting and Operation

5.1 Function parameters and factory setting

Intelligent controller function parameters setting; The protection characteristics of TGK1 switch see Table 5

Table 5

Function		Parameter setting	Time-delay set	Factory preset	User settable parameter	Fault status output	
						Basic type	Fire protection type
Overload protection		(0.4 ~ 1)Ie	Protection curve code	F1	(0.4 ~ 1)Ie	Time-delay trip	Delay alarm
Short-circuit short delay protection		(3 ~ 12)Ir+(0)	0.3 ~ 0.6s	8Ir/0.4s	(3 ~ 12)Ir+(0)	Time-delay trip	Delay alarm
Short-circuit instantaneous protection	45 type	(6 ~ 16)Ie	-	14Ie	(6 ~ 16)Ie	Instantaneous trip	Trip
	125 type	(6 ~ 14)Ie		12Ie	(6 ~ 14)Ie		
Unbalance (break phase and phase loss) protection		(20% ~ 80%)+(0)	1 ~ 40s	30%/10s	(20% ~ 80%)+(0)	Delay trip	Delay alarm (trip)

TGK1 Series Control and Protection Switchgear

Undercurrent protection		(0.2 ～ 0.8)Ir+(0)	1 ～ 60s	(0)	(0.2 ～ 0.8)Ir+(0)	Delay trip	Delay alarm
Undervoltage protection	Us230V	(154V ～ 198V)+(0)	1 ～ 30s	176V/10s	(154V ～ 198V)+(0)	Delay trip	Delay alarm (trip)
	Us400V	(266V ～ 342V)+(0)	1 ～ 30s	304V/10s	(266V ～ 342V)+(0)		
Overvoltage protection	Us230V	(230V ～ 286V)+(0)	1 ～ 30s	264V/10s	(230V ～ 286V)+(0)	Delay trip	Delay alarm
	Us400V	(400V ～ 494V)+(0)	1 ～ 30s	456V/10s	(400V ～ 494V)+(0)		
Jam delay		(0 ～ 99s)+(0)	0 ～ 99s	3s	(0 ～ 99s)+(0)	During start delay, some protections will be shielded such as short-circuit instantaneous trip.	
Jam protection		(5 ～ 9)Ir+(0)	1 ～ 50s	(0)	Hidden menu	Delay trip	Delay trip
Residual current protection		(30 ～ 500mA)+(0)	0.1 ～ 1s	100mA	(30 ～ 500mA)+(0)	Trip	Alarm

Note: As model functions, communication and leakage are optional; communication products adopt RS485 communication line, RJ45 interface, and Modbus protocol.
Overload protection setting curve (1.5Ir1 action time, s): F0 (with overload protection disactivated), F1 (51), F2 (98), F3 (144), F4 (200)
For overvoltage / undervoltage protection of controller, its power signal is from the auto-control terminal Us (A1-A2); residual current set as gear format: 30, 50, 75, 100, 150, 200, 300, 500 (mA). Fire protection type, under-voltage fault output is a delay alarm; when the voltage is lower than 132V (230V specification) or 228V (400V specification), trip will occur. The function parameter in the table is (0), indicating that this function is off.

5.2 Controller panel description

TGK1 should set the long-time delay and short-time delay setting current to the required value according to the line load current controlled and protected before the main circuit is powered on. After power on, the nixie tube will light up displaying the auxiliary current voltage value and the monitored circuit operating current values of three phases (A, B, C) in the cycle way.

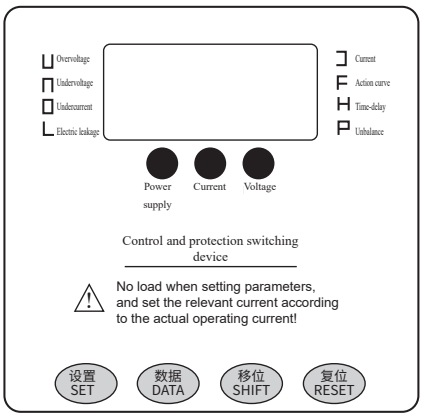

Set key: when the load is not running, press this key to enter the parameter setting state

Data key: modify the flashing word bit with the level difference of 1 (0 to 9 cycles)

Shift key: select the set word bit in the set state, and the selected word bit is in the flashing state

Reset key: After the parameter setting is completed, press this key to save parameters to put into the monitoring operation

5.3 Run operation

When TGK1 is connected to the working power supply, the LED displays the voltage value, and can be served as a voltmeter; the last three bits display the voltage value.

TGK1 can be served as an ammeter during operation to display three-phase current operation cyclically.

During the operation of TGK1, the power indicator is always on for basic products; the power indicator will flash for fire protection products.

Fault query: Run TGK1 under non-load; with "data key" pressed, compare with the panel fault type symbol, and view the last fault type; when the voltage value is displayed, it means that TGK1 has exited fault query and puts into normal monitoring operation; restart TGK1 to exit the fault query.

5.4 Controller menu (protection parameter setting)

TGK1 Series Control and Protection Switchgear

5.4.1 Controller menu

Controller menu level: open setting menu, hidden setting menu;

Open setting menu: Users can set function parameters as required (refer to Table 6);

Hidden setting menu: Users can set basic/firefighting change-over, communication address, baud rate and self-tuning functions.

One-key recovery operation: In case of parameter setting error, perform this operation, and restore the factory setting parameters of controller (Table 6 Factory preset values);

Self-tuning operation: After the load running is stable, perform this operation; the controller will automatically set the current setting according to the circuit parameters.

Warning: Do not enter the hidden setting menu and calibration menu to avoid setting disorder.

5.4.2 Protection parameter setting

When the motor starts and runs, the setting key will be invalid;

Open menu setting: During operation under non-load, press the set key to select the setting type, and press the Shift keys in turn to select data shift and press the data key to modify data;

Hidden menu setting: During operation under non-load, long-press data key and shift key (4s) to enter the hidden menu; press the set key to select the setting type, press the Shift keys in turn to select data shift and press the data key to modify data;

After setting parameters, press the set key to enter the next set state until all are finished;

Setting will be ignored for unrequired option. All parameters are set, press the Reset key to exist the setting state, keep the setting, and display the voltage value.

5.4.3 One-key recovery parameter operation

During operation under no-load, press the set key continuously to select the factory set, press the data key to set to YES, and press the Reset key to complete one-key recovery (initialization).

5.4.4 Auto-tuning parameter operation

Long press the number key and shift key (4s) to enter the hidden menu to display the basic / fire control switching; continuously press the Set key to start the self-setting mode ; press the Data key to adjust to YES, and press the Reset key to exit the menu;

If the product is of the basic type, the power indicator flashes and enter the auto-tuning state. The indicator light is always on to indicate that the auto-tuning is set successfully, and the switch enters the normal working state; if the product is of the fire protection type, the power light is always on and enter the auto-tuning state. The power light flashes to indicate that the auto-tuning is set successfully and the switch enters the normal working state; if the indicator light is off, it indicates that the auto-tuning fails to set; at this time, press the Reset key or restart the switch to return to the original state.

Table 6

Operation sequence	Display content	Code definition	Setting range	Display content
Press the set key for the first time	J000	Long-time delay setting current	(0.4 ~ 1) Ie	Customer requirements
Press the set key for the second time	H03	Start-time delay	0 ~ 99s	3s
Press the set key for the third time	F	Overcurrent inverse time protection action	Selected from the range of No. 1 to 4	F1
Press the set key 4th time	P30	Percentage of three-phase unbalance	(20% ~ 80%)+(0)	30%
Press the set key for the 5th time	U	Overvoltage value	(230V ~ 286V)+(0)	264V
Press the set key for the 6th time	n	Undervoltage value	(154V ~ 198V)+(0)	176V
Press the set key for the 7th time	L	Leakage current value code	Select from Item 0 to 8	Customer requirements
Press the set key for the 8th time	o	Undercurrent value	(0 ~ 0.8) Ir+(0)	(0)
Press the set key for the 9th time	HNO	Factory settings	NO or YES	NO

TGK1 Series Control and Protection Switchgear

Table 7

Menu display	Fault type	Fault parameter
⊐67.5	Overload	Current 67.5A
⊐483	Short-circuit short-time delay	Current 483A
⊐650	Short-circuit transient	Current 650A
P 100	Phase loss	Phase loss
P 38	Three-phase unbalance	38%
⊐ 15	Undercurrent	Current 15A
⊔ 268	Overvoltage	Voltage 268V
⊓ 170	Undervoltage	Voltage 170V
Return	/	/

5.5 Operation handle (panel description)

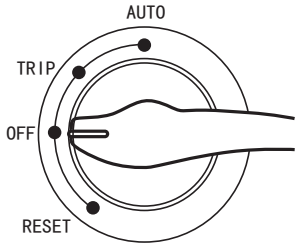

Turn on AUTO: (automatic control position); the switch is used to power on the electromagnet coil, and to turn on / off the control power supply to realize the remote automatic control.

Trip TRIP: When trip in case of a fault, the switching mechanism will work to trip, the main contact is open, and electromagnet coil circuit is power off.

Power off OFF: In the manual mode, the electromagnet coil is power off, and main contact of switch is in the OPEN position.

Re-trip RESET: Turn the operating knob to reset the tripped switching mechanism normally for trip again.

Isolation state: In the OPEN position, pull out and lock the isolation insert strip; at this time, the product is at the disconnected isolation state, and the handle is not available.

6 Installation and Use

Before installing the switch, check that the operating knob can work normally and is in the OFF position. "AUTO" is the main circuit power-on state, and "TRIP" is the free trip position. This state is the free trip position due to line failure. The switch can only be operated after the line fault is cleared by the appointed person. "0FF" is the main circuit OPEN position. The free-trip switch can only be reset and re-tripped by turning the operating knob to the "RESET" position.

Before the switch is installed and used, carefully check whether the power supply voltage of the coil and accessories is consistent with the product instruction and with the actual control circuit. With the coil powered (85%~110%) Us, when the knob is turned to the "AUT0" position, the electromagnet is reliably attracted, and when the knob is turned to the "OFF" position, the electromagnet is reliably released.

The operating current setting value of the switch release has been set at the factory, and can be adjusted by user according to actual needs.

The switch has the functions of overload and overcurrent, open-phase and phase loss, overvoltage and undervoltage protection, and an alarm display can be given by the indicator light.

TGK1 can run continuously after breaking the short-circuit current, but the switch shall be checked and the switch working status shall be confirmed.

TGK1 Series Control and Protection Switchgear

6.1 Common troubleshooting

Table 7

Menu display	Fault type	Fault type	Fault parameter
1	With the power supply connected, the switch does not work	① Check whether the operating knob is in the "AUTO" position ② Check whether the A1, A2 control power supply works normally	Turn the operating knob to the "AUTO" position and correctly connect to the control power supply
2	Turn on the power, and found the switch coil burns out	Check whether A1, A2 control power supply is connected wrongly or short circuit	Check the control circuit, or replace the switch
3	The switch is not self-locked	① Check auxiliary self-lock contacts ② Check A1, A2 control power supply voltage	Correctly connect the auxiliary circuit; for auxiliary circuit failure, replace the switch
4	The switch is turned on but the motor does not work	Check the power supply circuit and load	Check and repair the circuit and connect to the power supply correctly
5	Motor start, switch protection	Check 95, 98 auxiliary circuit status or handle position, and query the cause of the fault trip	Check and repair the load circuit (short circuit), adjust the load and switch parameters; or replace the switch
6	Load running for a period of time, switch protection	Switch intelligent controller protection, query fault record, check circuit	Check and repair the circuit; adjust and set parameters according to the load or replace the switch
7	The motor is burned out and the switch is not protected	Check the switch parameter setting, view the fault, check the circuit	Re-set the parameters according to the load, check and repair the circuit or replace the switch

6.2 Switch installation diagram (shown below)

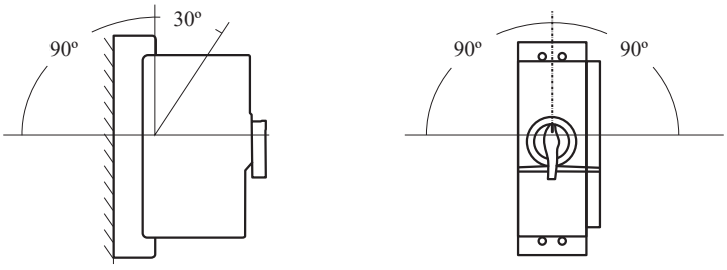

6.3 Outline and installation dimensions

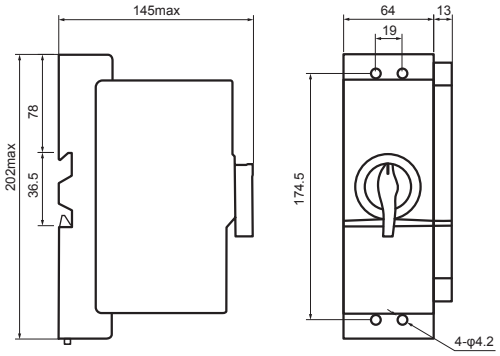

TGK1-45 control and protection switchgear

TGK1 Series Control and Protection Switchgear

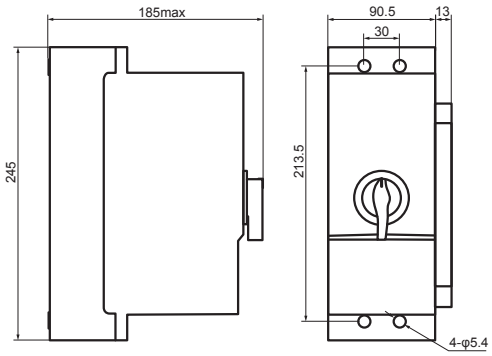

TGK1-125 control and protection switchgear

7 Basic Electrical Control Diagram

7.1 Description of TGK1 auxiliary group circuit

	NO	NO	NC	NO	NC	a	b
Accessory	13 / 14	23 / 24	31 / 32	41 / 44	41 / 42	95 / 98	201 / 202
06 auxiliary	√	√	√	√	√	√	√
	AC-15 Ie:5A Ue:400V			AC-15 Ie:3A Ue:230V			
Note: Auxiliary a (95/98): used as a fault trip signal port; Auxiliary b (201/202): used as a fire-fighting fault alarm signal port.							

7.2 Manual panel + local control

Secondary power supply	Power protection	Power signal	Local manual control		Auxiliary signal			Fault signal	
			Start	Stop	Self-lock	Run	Stop	Stop	Alarm

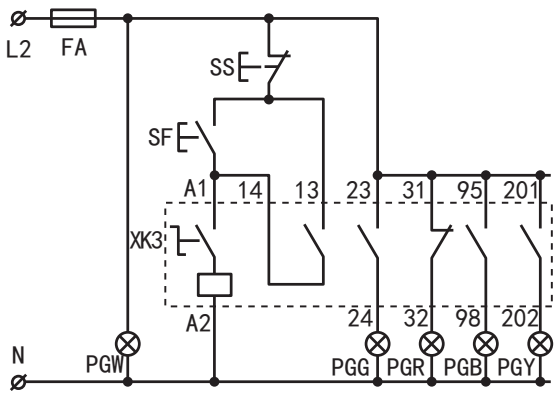

Note: This diagram is suitable for a single device in normal operation, with the start and stop buttons used for local and direct control.

TGK1 Series Control and Protection Switchgear

7.3 Manual panel + local control + remote control

Manual panel + local control + remote control

Secondary power supply	Power protection	Power signal	Local and remote manual control	Auxiliary signal			Fault signal		External signal		Signal power
				Self-lock	Run	Stop	Stop	Alarm	Stop	Run	

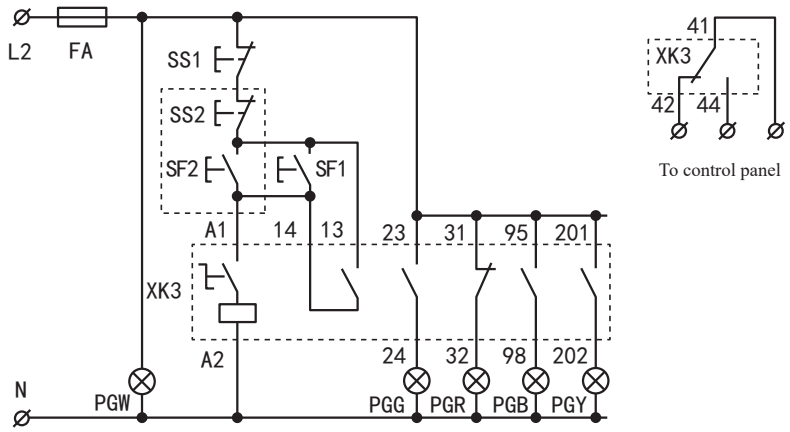

Note: This diagram is suitable for a single device in normal operation for various motors, with local and remote simultaneous control.

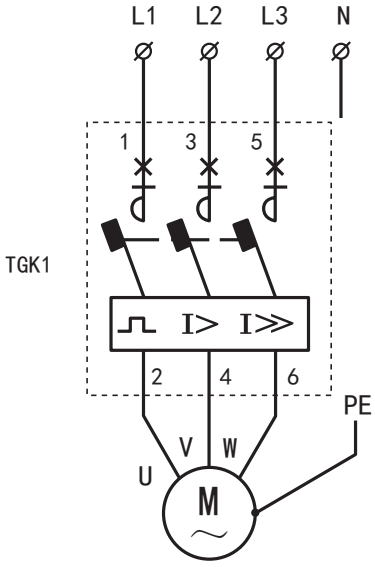

TGK1 Series Control and Protection Switchgear

8 Precautions

To control high-power motor (11kW and above), the starting torque, current multiples, voltage drop, and circuit capacity shall be considered comprehensively by user, and the appropriate voltage-reduction starting method is selected. The general specification requires that the voltage drop limit does not exceed 80% of the rated value and the starting current multiple should not exceed (4 ~ 5) times to allow the normal startup under the appropriate load and to guarantee the reliable action of the TGK1 electromagnet.

The exposed parts of the external connecting wires of the switch incoming and outgoing terminals shall be wrapped with insulation.

The product should be protected from rain and snow during transportation and storage. The storage environment must meet the following conditions: The mean daily temperature is +25℃, the relative humidity is not less than 90%, and the ambient temperature is not higher than +40℃ and not lower than- 5℃.

9 Ordering Notice

Please specify the following items when selecting TGK1 switch, and further specify the use conditions or use requirements if required:

Product name and model

Rated current of switch, and type and rated current of intelligent controller

Control power voltage of electromagnet coil

Required additional functions

TGD1 AC Motor Circuit Breaker

1 Overview

TGD1 AC motor circuit breaker is suitable for circuits with AC voltage up to 690V and current up to 80A for overload, open-phase, short-circuit protection, and infrequent start control of three-phase squirrel-cage asynchronous motor and for power distribution line protection, and infrequent load changeover. It can be used as disconnector.

2 Type Designation

TG D 1 - □

- □ — Frame current (A)
- 1 — Design code
- D — Motor circuit breaker
- TG — Enterprise code

3 Technical Parameters

3.1 Rated insulation voltage Ui(V): 690.

3.2 Rated working voltage Ue(V): TGD1-32: 230/240, 400/415, 440, 500, 690;

TGD1-80: 400/415.

3.3 Rated frequency (Hz): 50.

3.4 Frame current Inm(A): 32/80.

3.5 Rated current of release In(A): (See Table 1).

3.6 Setting current range: (See Table 1).

3.7 Rated ultimate short-circuit breaking capacity Icu(kA): (See Table 1).

3.8 Rated operating short-circuit breaking capacity Ics(kA): (See Table 1).

3.9 Rated impulse withstand voltage Uimp(V): 6000.

Table 1

Model	Rated current of release In(A)	Setting current regulating range (A)	Rated limit short-circuit breaking capacity Icu Rated run short-circuit breaking capacity Ics										Flashover distance (mm)
			230/240V		400/415V		440V		500V		690V		
			Icu kA	Ics kA	Icu kA	Ics kA	Icu kA	Ics kA	Icu kA	Ics kA	Icu kA	Ics kA	
TGD1	0.16	0.1-0.16	100	100	100	100	100	100	100	100	100	100	40
TGD1	0.25	0.16-0.25	100	100	100	100	100	100	100	100	100	100	40
TGD1	0.4	0.25-0.4	100	100	100	100	100	100	100	100	100	100	40
TGD1	0.63	0.4-0.63	100	100	100	100	100	100	100	100	100	100	40
TGD1	1	0.63-1	100	100	100	100	100	100	100	100	100	100	40
TGD1	1.6	1-1.6	100	100	100	100	100	100	100	100	100	100	40
TGD1	2.5	1.6-2.5	100	100	100	100	100	100	100	100	3	2.25	40
TGD1	4	2.5-4	100	100	100	100	100	100	100	100	3	2.25	40
TGD1	6.3	4-6.3	100	100	100	100	50	50	50	50	3	2.25	40

TGD1 AC Motor Circuit Breaker

Table, continued

Model	Rated current of release In(A)	Setting current regulating range (A)	Rated limit short-circuit breaking capacity Icu Rated run short-circuit breaking capacity Ics										Flashover distance (mm)
			230/240V		400/415V		440V		500V		690V		
			Icu kA	Ics kA	Icu kA	Ics kA	Icu kA	Ics kA	Icu kA	Ics kA	Icu kA	Ics kA	
TGD1	10	6-10	100	100	100	100	15	15	10	10	3	2.25	40
TGD1	14	9-14	100	100	15	7.5	8	4	6	4.5	3	2.25	40
TGD1	18	13-18	100	100	15	7.5	8	4	6	4.5	3	2.25	40
TGD1	23	17-23	50	50	15	6	6	3	4	3	3	2.25	40
TGD1	25	20-25	50	50	15	6	6	3	4	3	3	2.25	40
TGD1	32	24-32	50	50	10	5	6	3	4	3	3	2.25	40
TGD1-80	25	16-25	/	/	15	7.5	/	/	/	/	/	/	50
TGD1-80	40	25-40	/	/	15	7.5	/	/	/	/	/	/	50
TGD1-80	63	40-63	/	/	15	7.5	/	/	/	/	/	/	50
TGD1-80	80	56-80	/	/	15	7.5	/	/	/	/	/	/	50

3.10 Rated power of three-phase motor controlled by motor circuit breaker (see Table 2)

Table 2

Model	Rated current of release In(A)	Setting range regulating range (A)	Standard rated power of three-phase motor (kW)					
			AC-3, 50Hz					
			230/240V	400V	415V	440V	v500V	690V
TGD1	0.16	0.1-0.16	-	-	-	-	-	-
TGD1	0.25	0.16-0.25	-	-	-	-	-	-
TGD1	0.4	0.25-0.4	-	-	-	-	-	-
TGD1	0.63	0.4-0.63	-	-	-	-	-	0.37
TGD1	1	0.63-1	-	-	-	0.37	0.37	0.55
TGD1	1.6	1-1.6	-	0.37	-	0.55	0.75	1.1
TGD1	2.5	1.6-2.5	0.37	0.75	0.75	1.1	1.1	1.5
TGD1	4	2.5-4	0.75	1.5	1.5	1.5	2.2	3
TGD1	6.3	4-6.3	1.1	2.2	2.2	3	3.7	4
TGD1	10	6-10	2.2	4	4	4	5.5	7.5
TGD1	14	9-14	3	5.5	5.5	7.5	7.5	9
TGD1	18	13-18	4	7.5	9	9	9	11
TGD1	23	17-23	5.5	11	11	11	11	15
TGD1	25	20-25	5.5	11	11	11	15	18.5
TGD1	32	24-32	7.5	15	15	15	18.5	22
TGD1-80	25	16-25	/	11	11	/	/	/
TGD1-80	40	25-40	/	18.5	18.5	/	/	/
TGD1-80	63	40-63	/	30	30	/	/	/
TGD1-80	80	56-80	/	37	37	/	/	/

3.11 Housing protection grade: IP20.

3.12 Motor circuit breaker operating performance: When the maximum operating frequency is 120 times/h, the mechanical life is 100,000 times, and the electrical life is also 100,000 times.

TGD1 AC Motor Circuit Breaker

4 Operating Conditions

4.1 The altitude generally does not exceed 2,000 meters at the installation site.

4.2 The lower limit of ambient air temperature generally is not below than -5℃, the upper limit generally is not higher than +40℃, and the mean within 24H does not exceed +35℃.

4.3 Atmospheric conditions: The relative air humidity does not exceed 50% at the ambient air temperature +40℃, and a higher relative humidity is allowed at a lower temperature. The mean monthly minimum temperature of the wettest month does not exceed +25℃, and the mean monthly maximum relative humidity of this month does not exceed 90%. Condensation occurred on the product surface due to temperature changes shall be considered.

4.4 Pollution degree: 3.

4.5 Installation category: Class III.

4.6 The inclination between the motor circuit breaker and the vertical installation plane does not exceed 5°.

4.7 Trip class: TGD1-32 10A, TGD1-80 10.

5 Circuit Breaker Features

5.1 Action characteristics when all phase loads of motor circuit breaker are balanced (see Table 3).

Table 3

No.	Setting current multiple	Action time	Starting conditions	Ambient air temperature ℃
1	1.05	No action ≥ 2h	Cold state starts	+20℃±2℃
2	1.2	Action < 2h	Hot state (after No. 1 test) starts	
3	1.5	Aciton < 2 minutes	Hot state (starts after double the setting current is balancved thermally)	
4	7.2	2s<Tp≤10s	Cold state	

5.2 Action characteristics when all phase loads of motor circuit breaker are unbalanced (see Table 4).

Table 4

No.	Set current multiple		Action time	Starting condition	Ambinet ari temperature ℃
	Any two phases	Third phase			
1	1	0.9	No action ≥ 2h	Cold state starts	+20℃±2℃
2	1.15	0	Action < 2h	Hot state (after No. 1 test) starts	

5.3 Motor circuit breaker temperature compensation performance.

Table 5

No.	Set current multiple	Starting condition	Action time	Ambinet ari temperature ℃
1	1.0	Cold state starts	No action ≥2h	+40℃±2℃
2	1.2	Hot state (after No. 1 test) starts	Action<2h	+40℃±2℃
3	1.05	Cold state starts	No action ≥2h	-5℃±2℃
4	1.3	Hot state (after No. 3 test) starts	Action<2h	-5℃±2℃

TGD1 AC Motor Circuit Breaker

5.4 Setting current of instantaneous electromagnetic release of motor circuit breaker (see Table 6).

Table 6

Model	Related current of release In(A)	Setting current regulating range of thermal element (A)	Setting current of instantaneous electromagnetic release Ir(A)
TGD1	0.16	0.1-0.16	1.5
	0.25	0.16-0.25	2.4
	0.4	0.25-0.4	5
	0.63	0.4-0.63	8
	1	0.63-1	13
	1.6	1-1.6	22.5
	2.5	1.6-2.5	33.5
	4	2.5-4	51
	6.3	4-6.3	78
	10	6-10	138
	14	9-14	170
	18	13-18	223
	23	17-23	327
	25	20-25	327
	32	24-32	416
TGD1-80	25	16-25	350
	40	25-40	560
	63	40-63	910
	80	56-80	1120

5.5 Action characteristics of instantaneous electromagnetic release of motor circuit breaker (see Table 7)

Table 7

Test current	Starting state	Action time	Ambient air temperature ℃
0.8Ir	Cold state	No action ≥0.2s	20±2
1.2Ir	Cold state	Action<2s	20±2

5.6 Selection of backup fuse:

When the expected short-circuit current at the installation site is greater than the rated limit short-circuit breaking capacity of motor circuit breaker, the model and fuse current specification of the backup short circuit breaker fuse (see Table 8).

For example, fuse RT16(NT00) with usage category gG can be optional.

Table 8

Model	Rated current of release In(A)	Setting current regulating range (A)	Fuse current specifications of backup fuse only when the expected short-circuit current Icc>Icu rated limit short-circuit breaking capacity									
			230/240V		400/415V		440V		500V		690V	
			AmA	gL/gGA	AmA	gL/gGA	AmA	gL/gGA	AmA	gL/gGA	AmA	gL/gGA
TGD1	0.16	0.1-0.16	-	-	-	-	-	-	-	-	-	-
TGD1	0.25	0.16-0.25	-	-	-	-	-	-	-	-	-	-
TGD1	0.4	0.25-0.4	-	-	-	-	-	-	-	-	-	-
TGD1	0.63	0.4-0.63	-	-	-	-	-	-	-	-	-	-
TGD1	1	0.63-1	-	-	-	-	-	-	-	-	-	-
TGD1	1.6	1-1.6	-	-	-	-	-	-	-	-	-	-
TGD1	2.5	1.6-2.5	-	-	-	-	-	-	-	-	16	20
TGD1	4	2.5-4	-	-	-	-	-	-	-	-	25	32
TGD1	6.3	4-6.3	-	-	-	-	50	63	50	63	32	40
TGD1	10	6-10	-	-	-	-	50	63	50	63	32	40

TGD1 AC Motor Circuit Breaker

Table, continued

Model	Rated current of release In(A)	Setting current regulating range (A)	Fuse current specifications of backup fuse only when the expected short-circuit current Icc>Icu rated limit short-circuit breaking capacity									
			230/240V		400/415V		440V		500V		690V	
			Am A	gL/g G A	Am A	gL/g G A	Am A	gL/g G A	Am A	gL/g G A	Am A	gL/g G A
TGD1	14	9-14	-	-	63	80	50	63	50	63	40	50
TGD1	18	13-18	-	-	63	80	50	63	50	63	40	50
TGD1	23	17-23	80	100	80	100	63	80	50	63	40	50
TGD1	25	20-25	80	100	80	100	63	80	50	63	40	50
TGD1	32	24-32	80	100	80	100	63	80	50	63	40	50
TGD1-80	25	16-25	/	/	80	100	/	/	/	/	/	/
TGD1-80	40	25-40	/	/	80	100	/	/	/	/	/	/
TGD1-80	63	40-63	/	/	125	160	/	/	/	/	/	/
TGD1-80	80	56-80	/	/	125	160	/	/	/	/	/	/

6 Motor Circuit Breaker Accessories

6.1 Types, models, and specification of accessories (see Table 9).

Table 9

Accessory name	Accessory model & Spec.		
Undervoltage release	TGD1-32 UV110	TGD1-32 UV220	TGD1-32 UV380
Shunt release	TGD1-32 SR110	TGD1-32 SR220	TGD1-32 SR380
Instantaneous auxiliary contact (front-mounted)	TGD1-32 AF-11	TGD1-32 AF-20	-
Instantaneous aux. contact (side mounted)	TGD1-32 AS-11	TGD1-32 AS-20	-
	TGD1-80 AS-11	TGD1-80 AS-20	-
Waterproof mounting box	TGD1-32MC		

6.2 Performances of undervoltage releases TGD1 UV110, TGD1 UV220, and TGD1 UV380:

a. Rated insulation voltage Ui(V): 690

b. Action characteristics: When the voltage drops to the 70%-35% range of rated voltage, the undervoltage release shall work; when the power voltage is below than 35% rated voltage of release, the undervoltage release shall work to prevent the motor circuit breaker from closing; when the power voltage equals to or is greater than 85% rated voltage of release, the undervoltage release shall work to ensure the motor circuit breaker closed.

6.3 Performances of shunt releases TGD1 SR110, TGD1 SR220, and TGD1 SR380:

a. Rated insulation voltage Ui(V): 690;

b. Action characteristics: The action voltage range of shunt release is 70% ~ 110% of rated working voltage.

TGD1 AC Motor Circuit Breaker

6.4 Performance of instantaneous auxiliary contacts TGD1 AF-20 and TGD1 AF-11 (front-mounted)

a. Rated insulation voltage Ui(V): 250;

b. Resistive current Ith(A): 2.5;

c. Usage category, rated working voltage and rated working current of instantaneous auxiliary contact (see Table 10).

Table 10

Usage category	AC-15				DC-13	
Rated working voltage Ue(V)	24	48	110/127	230/240	24	48
Rated working current Ie(A)	2	1.25	1	0.5	1	0.3
Normal working power P(W)	48	60	127	120	24	15

6.5 Performances of instantaneous auxiliary contacts TGD1 AS-20 and TGD1 AS-11 (side-mounted):

a. Rated insulation voltage Ui(V): 690;

b. Resistive current Ith(A): 6;

c. Usage category, rated working voltage and rated working current of instantaneous auxiliary contact (see Table 11).

Table 11

Usage category	AC-15				DC-13		
Rated working voltage Ue(V)	48	110/127	230/240	380/415	24	48	220
Rated working current Ie(A)	6	4.5	3.3	2.2	6	5	0.5
Normal working power P(W)	300	500	720	850	140	240	120

6.6 TGD1 waterproof box

TGD1MC waterproof mounting box, protection grade: IP55.

TGD1 AC Motor Circuit Breaker

6.7 Installation position and dimensions of accessories (as shown in Figure below)

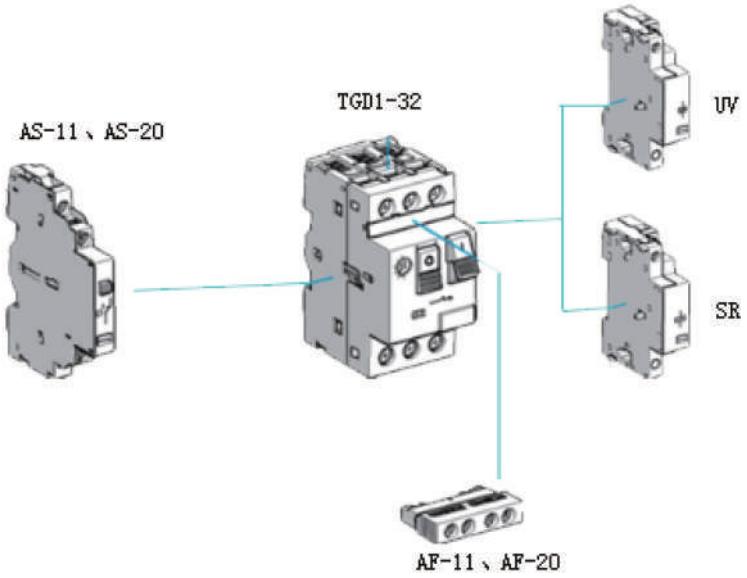

TGD1 accessory installation position

7 Outline and Installation Dimensions

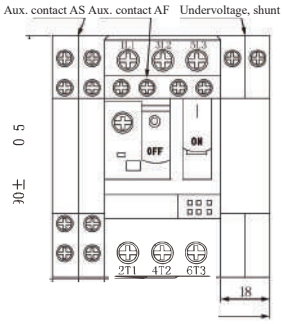

TGD1-32 installation dimensions

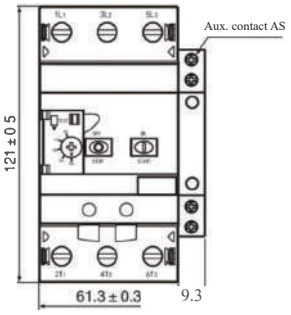

TGD1-80 installation dimensions

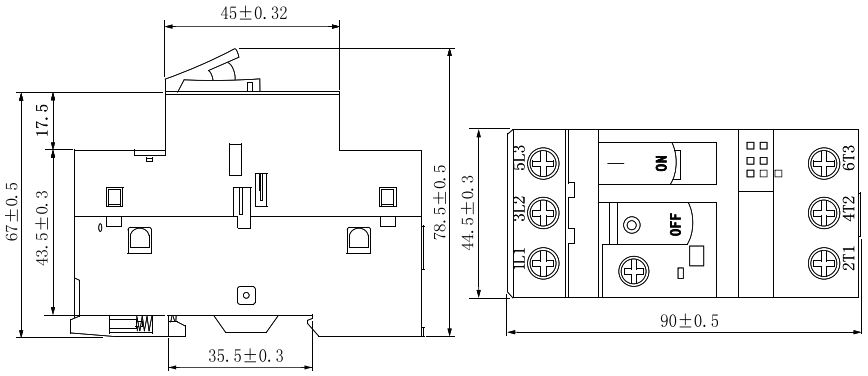

TGD1-32 outline and installation dimensions drawings

TGD1 AC Motor Circuit Breaker

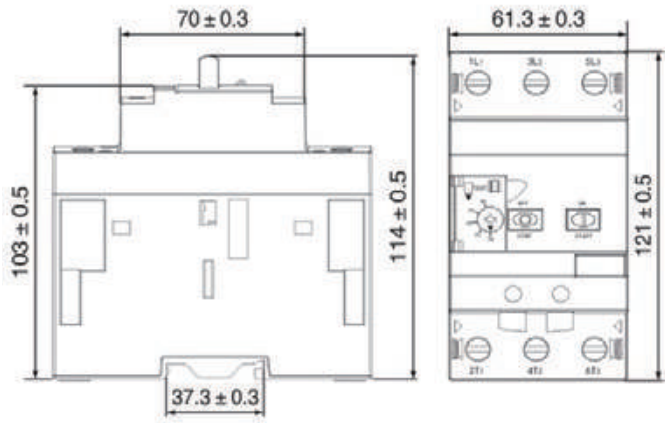

TGD1-32 outline and installation dimensions drawings

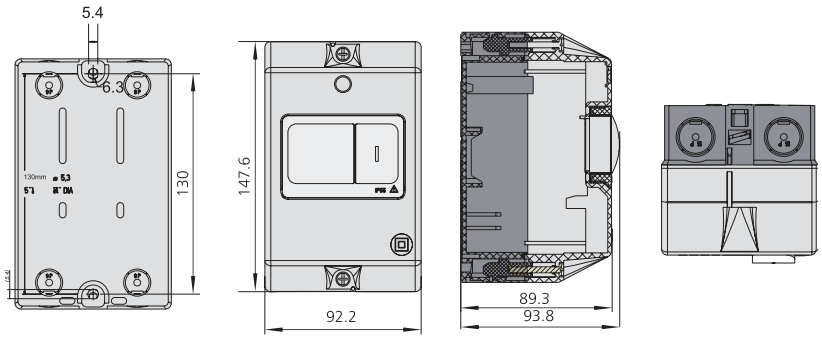

TGD1 series AC motor circuit breaker

8 Ordering Notice

8.1 Please specify the product model, specification, and quantity when ordering.
For example: To order 20 TGD1 motor circuit breakers with setting current 24A-32A.
Please specify: TGD1 24A-32A, 20 pcs.

8.2 To order accessories, please specify the accessory model and quantity; accessory model sees Table 9.
For example: To order 20 pieces of 380V 50Hz undervoltage releases.
Please specify: TGD1 UV380V, 20 pcs.

For example: To order 10 instantaneous auxiliary contact sets with resistive current 6A containing one normally-open contact and one normally-closed contact.
Please specify: TGD1 AS-11, 10 pcs.

TGBK1 Series Control Transformer

1 Overview

TGBK1 series control transformer (hereinafter referred to as transformer) is used in the AC 50/60Hz AC circuit with the rated power voltage of not exceeding 660V (voltage above 660V can be customized through negotiation) as the control power supply in machine tools and mechanical equipment, and the power supply for the work lighting, electronic equipment and signal lamp; it can also be used as a miniaturized power supply.

2 Type Designation

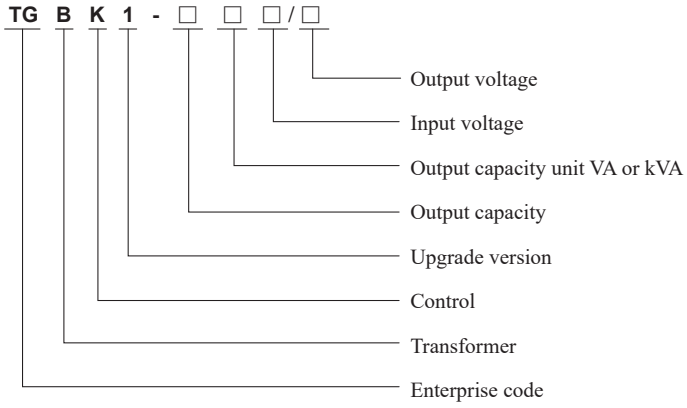

3 Winding Structure Form

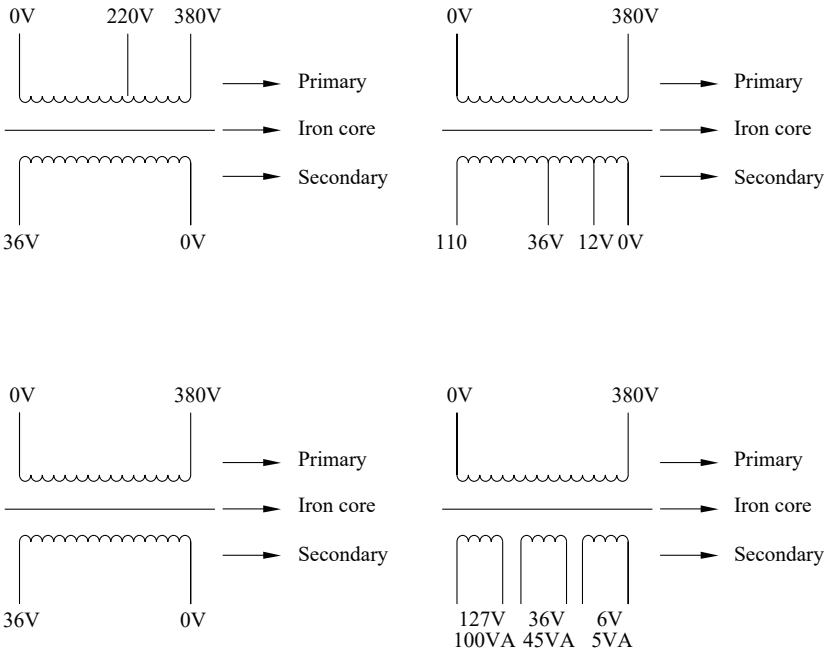

TGBK1 Series Control Transformer

4 Normal working and installation conditions

4.1 The altitude does not exceed 2000m;

4.2 The maximum ambient temperature does not exceed +40°C, and the minimum temperature is not below -5°C (when the product is required to be used in an environment below -5°C or higher than +40°C, this shall be specified when ordering), and the mean temperature within 24h does not exceed +35°C;

4.3 The monthly mean maximum humidity is not greater than 90% in the wettest month, the monthly mean minimum temperature of that month is +25°C; the condensation occurred on the product surface due to temperature changes shall be considered.

4.4 Used in the medium without explosion hazard free from gas and conductive dust sufficient to cause metal corrosion and insulation damage.

4.5 Installed in a place where there is no obvious vibration and impact vibration.

4.6 Installed in a place where there is no rain and snow immersion.

4.7 The input voltage does not exceed the rated voltage of the transformer ± 5%V.

5 Outline and Installation Dimensions

5.1 TGBK1-25VA~200VA product outline drawings

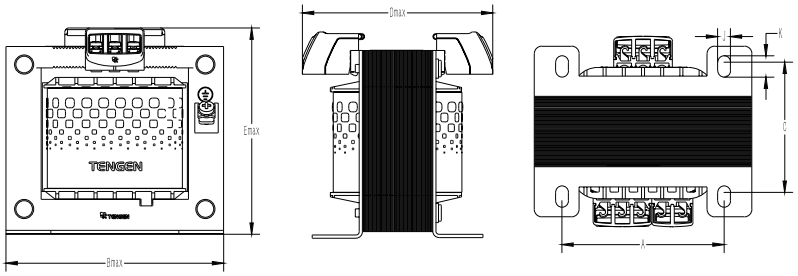

5.2 TGBK1-250VA~1000VA product outline drawings

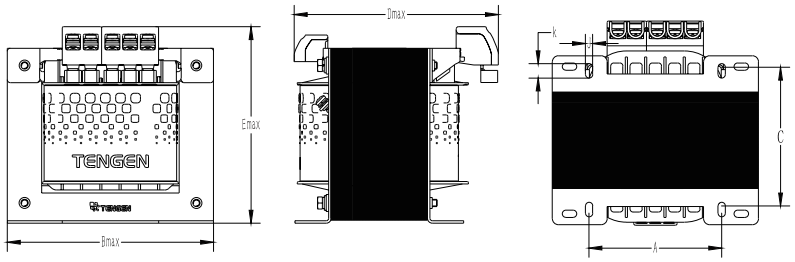

5.3 TGBK1-1500VA~10kVA product outline drawings

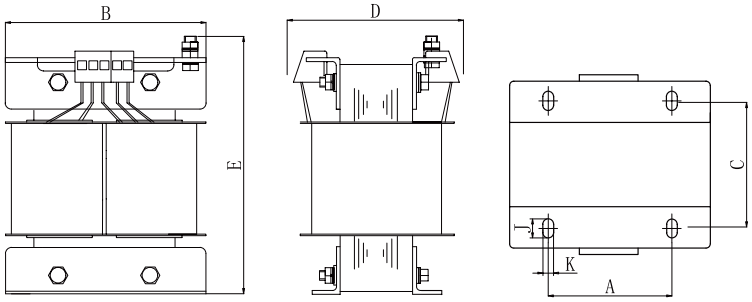

TGBK1 Series Control Transformer

5.4 TGBK1 outline dimensions

Model	Outline dimensions mm			Installation dimensions mm (±1.5)		Mounting hole mm	
	Bmax	Dmax	Emax	A	C	J	K
TGBK1-25VA	80	85	83	56	51	5	9
TGBK1-50VA	85	86	86	56	52	5	9
TGBK1-100VA	103	92	99	78	61	6	10
TGBK1-150VA	103	100	99	76	69	6	10
TGBK1-200VA	103	110	99	79	80	6	10
TGBK1-250VA	130	140	130	90	77	6	10
TGBK1-300VA	130	145	130	90	82	6	10
TGBK1-400VA	150	150	147	110	82	6	12
TGBK1-500VA	150	158	147	110	90	6	12
TGBK1-600VA	150	158	147	110	90	6	12
TGBK1-700VA	173	185	170	110	115	6	12
TGBK1-800VA	173	185	170	110	115	6	12
TGBK1-1000VA	173	185	170	110	115	6	12
TGBK1-1500VA	265	195	280	130	125	10	18
TGBK1-2000VA	265	200	280	130	130	10	18
TGBK1-2500VA	265	220	280	130	145	10	18
TGBK1-3000VA	265	220	280	130	145	10	18
TGBK1-4000VA	310	240	335	210	150	10	18
TGBK1-5000VA	310	250	335	210	160	10	18
TGBK1-6000VA	360	270	375	220	145	Φ12	
TGBK1-8000VA	360	290	375	220	165		
TGBK1-10kVA	360	310	375	220	180		

6 Ordering Notice

6.1 Model, spec., capacity and qty. of transformer.

6.2 Voltage and current or capacity distribution of each winding of transformer.

6.3 If special customization is required, please specify this and contact the production company.

Note: If out of the normal working environment range (such as temperature, and altitude), special customization is required.

BK(Copper) Series Control Transformer

1 Overview

BK(Copper) Series Control Transformer is used in AC 50/60Hz various machine tools and mechanical equipment with the rated voltage 600V and below as the control power supply for general electrical device and as the power supply for local lighting and indicator (for 660V and above, customization is required)

2 Type Designation

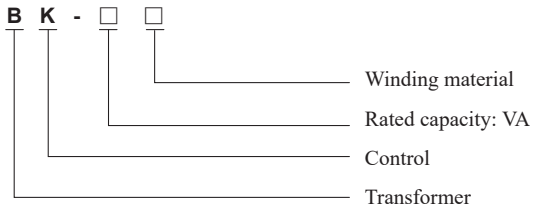

3 Winding Structure Form

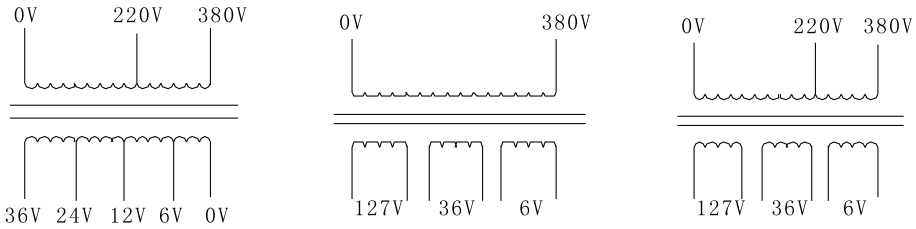

4 Outline and Installation Dimensions

4.1 Outline and Installation Dimensions

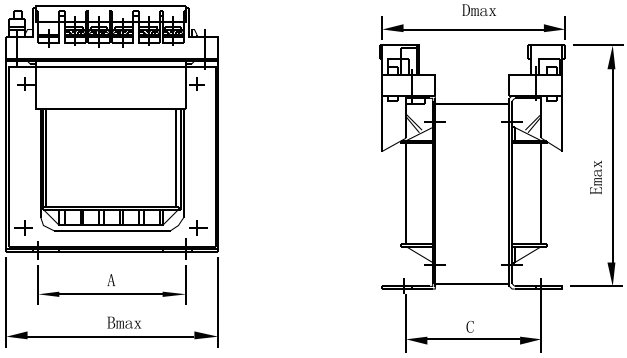

Fig. a) BK-25 (copper) ~ 200 (copper) control transformer outline drawings

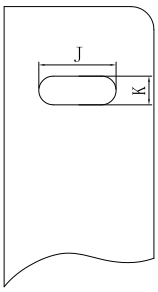

BK-25VA (copper) ~ 1000VA (copper) K x J

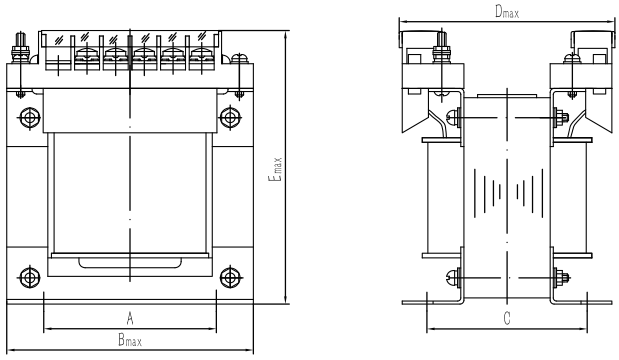

Fig. b) BK-250 (copper) ~ 1000 (copper) control transformer outline drawings

BK(Copper) Series Control Transformer

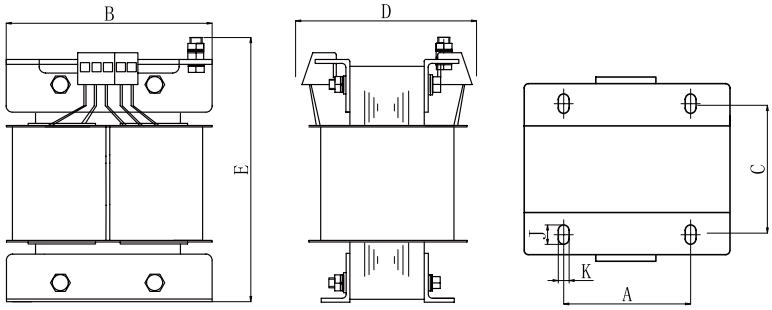

Fig. c) BK-1500 (copper) ~ 5000 (copper) control transformer outline drawings

Model	Outline dimensions mm			Installation dimensions mm (±1.5)		Mounting hole mm	
	Bmax	Dmax	Emax	A	C	J	K
BK-25(copper)	80	69	90	56	52	5	9
BK-50(copper)	80	69	90	56	52	5	9
BK-100(copper)	85	81	99	56	61	5	9
BK-150(copper)	103	97	110	76	68	5	9
BK-200(copper)	103	106	110	76	77	5	9
BK-250(copper)	120	100	135	90	79	6	10
BK-300(copper)	120	105	135	90	84	6	10
BK-400(copper)	132	125	145	110	80	6	10
BK-500(copper)	132	135	145	110	90	8	10
BK-700(copper)	150	161	164	110	116	6	10
BK-1000(copper)	150	161	164	110	116	6	10
BK-1500(copper)	190	190	230	130	111	10	18
BK-2000(copper)	190	200	230	130	121	10	18
BK-2500(copper)	190	225	250	130	146	10	18
BK-3000(copper)	190	225	250	130	146	10	18
BK-4000(copper)	240	265	310	130	150	10	18
BK-5000(copper)	240	265	310	130	150	10	18
BK-7000(copper)	240	265	350	130	150	10	18
BK-8000(copper)	360	280	370	280	140	11	20
BK-10000(copper)	420	300	370	280	150	11	20

Note: 10KVA and above product shall be customized.

BK(Copper) Series Control Transformer

5 Normal working and installation conditions

5.1 The altitude does not exceed 2000m;

5.2 The maximum ambient temperature does not exceed +40°C, and the minimum temperature is not below -5°C (when the product is required to be used in an environment below -5°C or higher than +40°C, this shall be specified when ordering), and the mean temperature within 24h does not exceed +35°C;

5.3 The monthly mean maximum humidity is not greater than 90% in the wettest month, the monthly mean minimum temperature of that month is +25°C; the condensation occurred on the product surface due to temperature changes shall be considered.

5.4 Used in the medium without explosion hazard free from gas and conductive dust sufficient to cause metal corrosion and insulation damage.

5.5 Installed in a place where there is no obvious vibration and impact vibration.

5.6 Installed in a place where there is no rain and snow immersion.

5.7 The input voltage does not exceed the rated voltage of the transformer ± 5%V.

6 Ordering Notice

6.1 Product name: Control transformer.

6.2 Product model: BK- “Rated capacity” (copper).

6.3 Rated frequency: 50Hz.

6.4 Rated input voltage: 660/380/220.

6.5 Rated output voltage, and capacity under the outlet voltage of each set, such as 110V(700VA) 24V (300VA).

6.6 If an isolation shield is required between the input and outlet windings of the product, please specify this when ordering.

Note: If out of the normal working environment range (such as temperature, and altitude), special customization is required.

SBK,SG Series Three-phase Transformer

1 Overview

SBK,SG Series Three-phase Transformer (hereinafter referred to as transformer) is used in the AC 50/60Hz circuit with the rated voltage up to 1200V as the power supply of the energy storage, control, lighting and indicator for mechanical equipment, various machine tools electric apparatuses, and photovoltaic wind power set, and it can also be used as miniature power supply and rectifier power supply. The SBK is of the open type, and the SG is of the protection type.

2 Type Designation

S G □ – □ / □ □

- Connection group
- Voltage grade: kV
- Rated capacity: kVA
- Design code
- Dry transformer
- Three-phase

S B K – □ / □ □

- Connection group
- Voltage grade: kV
- Rated capacity: kVA
- Control
- Transformer
- Three-phase

3 Outline and Installation Dimensions

3.1 SBK series open type dry transformer outline dimensions (see Table, Fig. 1, Fig. 2).
3.2 SBK series protection type dry transformer outline dimensions (see Table, Fig. 3, Fig. 4, Fig. 5).

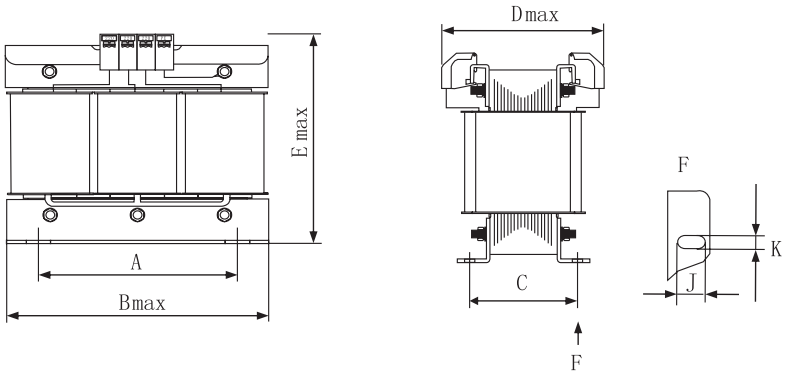

Fig. 1 Open type 5kVA and below (SBK)

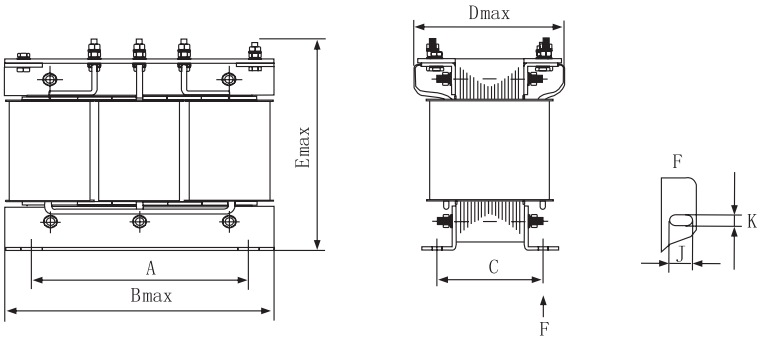

Fig. 2 Open type 6kVA and above (SBK)

SBK,SG Series Three-phase Transformer

Fig. 3 Protection type 3kVA and below

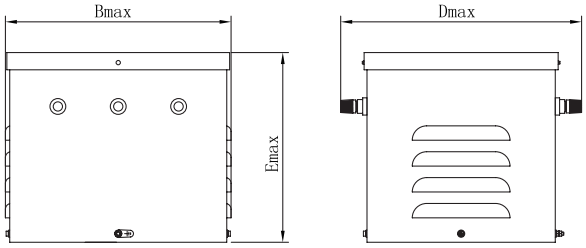

Fig. 4 Protection type (4kVA ~ 45 KVA)

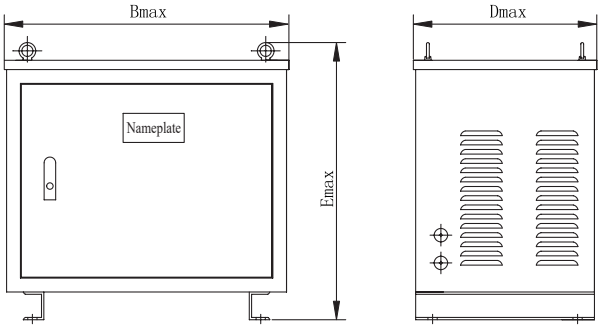

Fig. 5 Protection type (50kVA ~ 500 KVA)

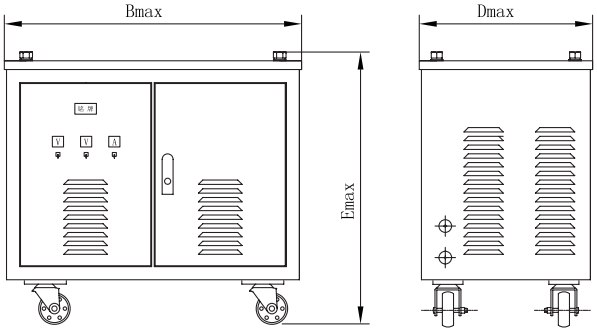

Electrical schematic diagram

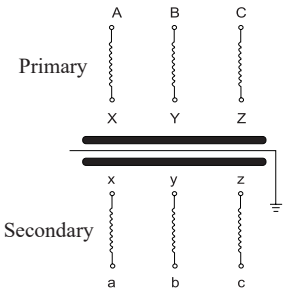

Connection group diagram

Example ① Y/yn(Y/Y0)

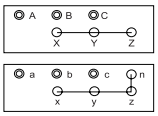

Example ② Y/D(Y/△)

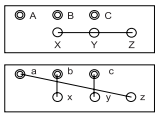

Example ③ D/y(△/Y)

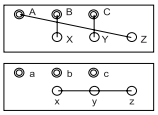

Example ④ D/d(△/△)

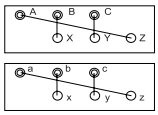

SBK,SG Series Three-phase Transformer

Model & Spec.	Rated voltage (V)		Open type			Protection type	
			Outline dimensions (max)	Installation dimensions (±5)	Mounting hole	Outline dimensions (max)	Installation dimensions
	Input	Output	B×D×E（mm）	A×C（mm）	K×J	B×D×E（mm）	K×J
SG-0.1	690 660 400 380	660 380 220 200	125×100×125	90×55	6×12	245×240×215	—
SG-0.3			155×110×155	110×66			
SG-0.5			185×140×185	130×85	8×16	285×270×235	
SG-0.75			185×150×185	130×92			
SG-1			185×160×185	130×103			
SG-1.5			235×170×225	180×105		325×325×280	
SG-2			270×190×255	200×110	10×22	365×330×320	
SG-2.5			270×190×255	200×118			
SG-3			270×200×255	200×126			
SG-4			305×210×305	220×135		400×330×400	
SG-5			305×220×305	220×135			
SG-6			365×220×350	260×135		460×370×430	With caster
SG-8			365×240×350	260×145			
SG-10			425×260×400	320×145	12×25	520×400×465	
SG-15			425×280×400	320×160			
SG-20			480×320×460	360×160		600×470×540	
SG-25			480×340×460	360×170			
SG-30			480×350×460	360×180			
SG-40			540×350×550	400×190	φ13	680×500×680	
SG-50			以定制为准	以定制为准		850×600×820	
SG-60			以定制为准	以定制为准			
SG-80			以定制为准	以定制为准		1000×700×900	
SG-100			以定制为准	以定制为准			Without caster
SG-125			以定制为准	以定制为准	φ15	1200×750×1020	
SG-150			以定制为准	以定制为准			
SG-200			以定制为准	以定制为准		1300×800×1150	
SG-250			以定制为准	以定制为准			

Notes:

1. The dimensions listed in the above table are for reference: SG-50KVA and above has cylindrical iron core that shall be specially customized, and the installation dimensions are determined according to the materials. The product dimensions of the Al line with the current of greater than 250A and with the voltage of greater than 800V are changed, and shall be customized.
2. Any of the rated input and output voltages listed in the table can be selected according to the requirements.
3. Any voltage and dimension not listed in the above table shall be specially customized according to the user's requirements through the negotiation.
4. The terminal blocks of SG-3kVA and below protection type product are located outside the housing, as shown in Fig. 3.
   SG-3kVA and below protection type product has housing, and the voltmeter, ammeter, air cooling system and wheels are added according to the user's requirements, as shown in Fig. 4 and Fig. 5.

SBK,SG Series Three-phase Transformer

4 Normal working and installation conditions

4.1 The altitude does not exceed 2000m.
4.2 The maximum ambient temperature is +40℃, and the minimum temperature is -5℃.
4.3 The relative humidity of the atmosphere air does not exceed 50% at the ambient temperature +40℃, and higher relative humidity is allowed at lower temperatures. The maximum relative humidity is 90% (at +25℃).
4.4 There is no dirt and explosive medium that severely affect the insulation of transformer and no corrosive harmful gas or dust in the ambient air; during operation, the transformer shall not be subject to natural erosion.
4.5 There is no severe vibration and bump at the installation site.
4.6 The power voltage waveform is a sine wave, and the three-phase power supply is approximately symmetrical.

5 Structure Features

SG series three-phase dry transformer can be of the open type (SBK) and protection type, featuring with low loss, small noise, good performance, and non-pollution to the environment. For protection type, the housing is made of cold-rolled steel plate, and the transformer is installed inside and there are inlet and outlet holes on the housing for convenient installation of power line. In addition, for protection type, the voltage and current monitoring meters, axial current cooling fan and steering wheels can be added according to the user's requirements for convenient movement.

6 Ordering Notice

6.1 Product name: Three-phase dry transformer.
6.2 Product model: SG-10/0.5.
6.3 Output capacity: 10kVA.
6.4 Frequency: 50z.
6.5 Rated input voltage (refer to line voltage): 380V.
6.6 Rated output voltage (refer to line voltage): 220V.
6.7 Connection method: "Y" for input, "d" for "Y/d" for output
6.8 Open type or protection type: Protection type
6.9 Whether an isolation shield is required or not shall be specified when ordering.
Note: If out of the normal working environment range (such as temperature, and altitude), special customization is required.

$T^D_S GC_2$, $T^D_S GC_2J$ Contact Voltage Regulator

1 Overview

$T^D_S GC_2$, $T^D_S GC_2J$ series contact voltage regulator is a dry self-cooled and self-coupled voltage regulator, which is widely used in many applications such as metallurgy, chemicals, instruments and meters, electromechanical manufacturing, light and textile industry, electromechanical manufacturing, and scientific experiment to realize the purpose of voltage regulation, temperature control, speed regulation, and lighting regulation.

2 Type Designation

T □ G C 2 J - □

- Rated capacity (kVA)
- Economical type
- Design code
- Contact type
- Dry-type self-cooled
- D: Single-phase; S: Three-phase
- Regulator, feature code

3 Technical Parameters

Model		Rated capacity (kVA)	Number of phases	Rated frequency (Hz)	Rated input voltage(V)	Output voltage range (V)	Rated output current(A)
$TDGC_2$-0.2		0.2	1	50	220	0~250	0.8
$TDGC_2$-0.5		0.5					2
$TDGC_2$-1		1					4
$TDGC_2$-2		2					8
$TDGC_2$-3		3					12
TDGC2-5	$TDGC_2J$-5	5					20
	$TDGC_2J$-7	7					28
$TDGC_2$-10	$TDGC_2J$-10	10					40
$TDGC_2$-15	$TDGC_2J$-15	15					60
$TDGC_2$-20	$TDGC_2J$-20	20					80
$TDGC_2$-30	$TDGC_2J$-30	30					120
	$TDGC_2J$-40	40					160
	$TDGC_2J$-50	50					200
$TSGC_2$-1.5		1.5	3		380	0~430	2
$TSGC_2$-3		3					4
$TSGC_2$-6		6					8
$TSGC_2$-9		9					12
$TSGC_2$-15	$TSGC_2J$-15	15					20
	$TSGC_2J$-20	20					27
$TSGC_2$-30	$TSGC_2J$-30	30					40
	$TSGC_2J$-40	40					54
	$TSGC_2J$-50	50					67

Note: Specially customized; the single-phase voltage regulator with rated output voltage ranged 0 to 300V can be available, and the three-phase voltage regulator with rated voltage ranged 0 to 500V is also available. With the capacity and volume unchanged, the rated output current shall be reduced correspondingly.

$T^{D}_{S}GC_2$, $T^{D}_{S}GC_2J$ Contact Voltage Regulator

4 Normal Working and Installation Conditions

4.1 Ambient temperature:
Max. temperature: +40℃
Mean air temperature of the hottest month: +30℃
Max. yearly mean air temperature: +20℃
Min. air temperature: -5℃

4.2 Altitude:
Altitude does not exceed 1,000 meters.

4.3 Atmospheric conditions:
The mean relative humidity of the wettest month does not exceed 90%, and the min. mean temperature of that month is +25℃.

4.4 Three-phase power voltage symmetry:
For three-phase voltage regulator, its three-phase power voltage is symmetrical approximately.

4.5 Power voltage waveform:
The power voltage waveform is sine wave or approximate sine wave.

4.6 Installation environment:
Indoors;
Parallel connection is not allowed;
There is no serious vibration or bump as well as no gas, steam, chemical sediment, dust, dirt, and explosive and corrosive medium at the installation (placement) site.

4.7 For any special working conditions that are inconsistent with the above requirements, please contact the manufacturer by the use unit.

5 Structure Features

This product is an ideal AC voltage regulation power supply featuring with waveform non-distortion, small size, light weight, high efficiency, convenient operation, reliable run, and long-term operation.

6 Outline and Installation Dimensions

6.1 TDGC2 outline dimensions are shown in Fig. 1;

6.2 TDGC2J outline dimensions are shown in Fig. 2;

6.3 TSGC2 outline dimensions are shown in Fig. 3;

6.4 TSGC2J outline dimensions are shown in Fig. 4;

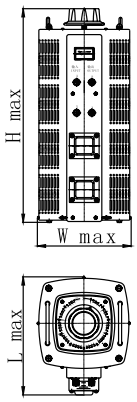

Fig. 1

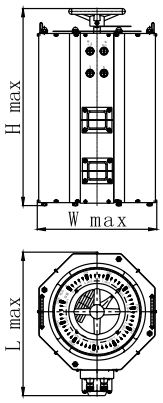

Fig. 2

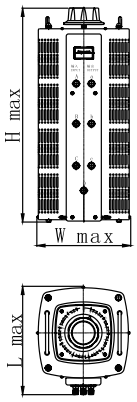

Fig. 3

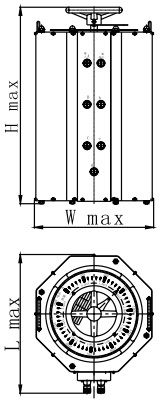

Fig. 4

$T^{D}_{S}GC_2$, $T^{D}_{S}GC_2J$ Contact Voltage Regulator

Specifications, outline, and weight

Model	Product dimensions (mm) (L×W×H)	Weight (kg)	Model	Product dimensions (mm) (L×W×H)	Weight (kg)	Model	Product dimensions (mm) (L×W×H)	Weight (kg)
$TDGC_2$-0.2	130×110×130	2.3	$TDGC_2J$-5	375×350×245	21	$TSGC_2J$-15	395×350×580	64
$TDGC_2$-0.5	150×130×140	3.3	$TDGC_2J$-7	375×350×245	26	$TSGC_2J$-20	405×350×580	75.5
$TDGC_2$-1	200×170×170	5.8	$TDGC_2J$-10	410×350×418	46	$TSGC_2J$-30	420×350×1080	132
$TDGC_2$-2	200×190×180	7.9	$TDGC_2J$-15	420×350×580	66	$TSGC_2J$-40	420×350×1080	147
$TDGC_2$-3	230×200×200	10.4	$TDGC_2J$-20	420×350×750	90	$TSGC_2J$-50	440×350×1180	149
$TDGC_2$-5	270×240×270	14.9	$TDGC_2J$-30	420×350×1080	135			
$TDGC_2$-10	310×240×410	30.8	$TDGC_2J$-40	420×350×1080	151			
$TDGC_2$-15	310×240×570	47	$TDGC_2J$-50	420×350×1180	160			
$TDGC_2$-20	310×240×760	62						
$TDGC_2$-30	310×240×1090	96						
$TSGC_2$-1.5	170×130×330	9.6						
$TSGC_2$-3	250×180×420	18.5						
$TSGC_2$-6	250×200×430	24.2						
$TSGC_2$-9	270×210×480	31.5						
$TSGC_2$-15	310×240×570	45						
$TSGC_2$-30	310×240×1090	93						

7 Ordering Notice

Example:

7.1 Product name: Contact voltage regulator

7.2 Product model: $TDGC_2$-10

7.3 Rated input voltage: 220V.

7.4 Output voltage range: 0~250V.

7.5 Output capacity: 10kVA.

7.6 Order quantity: 5 pcs.

TGLA1 Series Button Switch

1 Overview

TGLA1 Series Button Switchs are suitable for the AC 50Hz/60Hz circuit control system with voltage up to 400V, DC voltage up to 230V for control of magnetic starters, contactors, relays and other electrical lines. The button with indicator light is also suitable for occasions with light signal indication.

2 Type Designation

TG LA 1 - □ □ □ □ □

- Color
- Voltage of light
- Contact type
- Auxiliary code
- Pushbutton type:
  - No code: IP65 protection grade
  - E: IP40 protection grade
- Series code
- Pushbutton
- Enterprise code

3 Technical Parameters

3.1 Ratings and various performances see Table 1;

3.2 Model, specifications and type see Table 2;

3.3 The rated limit short-circuit current is 1000A, and the model of SCPD used is RT19-32.

Table 1

Rated insulation voltage Ui(V)	690				
Rated impulse withstand voltage (Uimp)(kV)	4				
Resistive current Ith(A)	10				
Rated working voltage Ue(V)		400	230	110	
Rated working current Ie(A)	AC-15	1.9	3	/	
	DC-13	/	0.3	0.6	
LED lamp voltage (V)	AC/DC	6、12、24、48、110、220		AC	380
Contact resistance	≤50mΩ				
Mechanical life	Flat button, high button, mushroom button: 3 million times Knob, key button, E-stop button, self-lock button: 100,000 times				
Electrical life	AC-15: 600,000 times DC-13: 300,000 times				
Protection grade	Common type: IP65 (Other button), IP40 (key button): E type: IP40				

TGLA1 Series Button Switch

Table 2

Pushbutton type	Auxiliary code		Contact type	Lamp voltage	Color
P : Flat button ZP : Self-locking flat button G : High button ZG: Self-lock high button	—	—	1: 1NC 2: 1NO 3: 2NC 4: 2NO 5:1NO+1NC	—	White Green Red Yellow Blue Black
M: Mushroom head self-reset button	4:φ40 6:φ60	—			
DX: Short-handle knob CX: Long-handle knob	21: Two-position lock 22: Two-position reset 31: Three-position lock 32: Three-position reset 33: Three-position left lock and right reset 34: Three-position left reset and right lock	—			
DP : Illuminated flat button DZP : Illuminated self-lock flat button DG : Illuminated high button DZG: Illuminated self-locking high button	—	—		AC/DC6V AC/DC12V AC/DC24V AC/DC48V AC/DC110V AC/DC220V AC380V	White Green Red Yellow Blue
DM: Illuminated mushroom head self-reset button with light	4:φ40 6:φ60	—			
DDX: Illuminated short-handle knob DCX: Illuminated long-handle knob	21: Two-position lock 22: Two-position reset 31: Three-position lock 32: Three-position reset 33: Three-position left lock and right reset 34: Three-position left and right lock	—			White Green Red Yellow Blue
YE: key button	21: Two-position lock 22: Two-position reset	0: Two-position lock, two-position pull out 1: Two-position reset, middle pull out 2: Two-position lock, middle pull out		—	—
	31: Three-position lock 32: Three-position reset 33: Three-position left lock and right reset 34: Three-position left and right lock	0: Three-position lock, three-position pull out 1: Three-position reset, middle pull out 2: Three-position lock, left/middle pull out 3: Three-position lock, right/middle pull out 4: Three-position lock, middle pull out 5: Three-position left lock, right reset, left/middle pull out 6: Three-position left lock, right recovery, middle pull out 7: Three-position left and right lock center/right pull out 8: Three-position left and right lock, middle pull out			
XF: Rotate to release E-stop button	3: φ30 4: φ40 6: φ60	—		—	Red
C:Accessories	10: Normally open contact group 01: Normally closed contact group	—	—	—	—

Note: 1. The type of button in the table is IP65 protection grade. If IP40 protection grade is required, it is necessary to put "E" after the type of button.

2. The key button protection grade: IP40.

TGLA1 Series Button Switch

4 Operating Conditions

4.1 Normal operation condition

4.1.1 Ambient air temperature: -25ºC~+50ºC; the average temperature within 24h does not exceed +45ºC; the altitude of the installation site does not exceed 2,000 meters.

4.1.3 Atmosphere conditions

4.1.3.1 Humidity: When the maximum temperature is +50ºC, the relative humidity of the air does not exceed 50%; higher relative humidity is allowed at lower temperatures.

For example: up to 90% at 20°C; special measures should be taken for the occasional condensation due to temperature changes.

4.1.4 Pollution degree: 3.

4.2 Installation conditions

4.2.1 Used in a place without non-explosive medium that there is no enough gas and conductive dust to cause corrosion to metal and damage to the insulation;

4.2.2 Used in places with rain and snow prevention equipment provided not full of water vapor;

4.2.3 Used in a place where there is no significant shaking, shock and vibration;

4.2.4 Installation category: Class II.

5 Structure Features

5.1 All contacts have the dual functions of switching circuit and self-cleaning, and the reliability of contacts can still be guaranteed under low voltage and low current;

5.2 The normal open and normal closed contact groups are independent of each other; they can be combined as required for convenient replacement.

5.3 The concealed wiring terminal is used, safer and more reliable.

6 Outline and Installation Dimensions

6.1 The installation size of this series of products is $\Phi 22.3^{+0.4}_{0}$. When installation, insert the head of button into the mounting hole from the front of panel, then insert the tightening nut at the back of the panel (panel thickness ranged 1mm to 6mm) (note: the installation torque is controlled 2.2N·m±0.2N·m), install the middle set after fastening nut, and finally close the switch components or lamp holder directly without any tools required.

6.2 When wiring, first loosen the screw with a screwdriver, then connect the wire, and finally tighten the screws (the tightening torque ranged 0.8N·m~1N·m). After installation, press the button and check for blockage and whether the switch elements are fully inserted. If found any abnormality, please contact our company for solving problems in time.

6.3 Installation and removal method

Installation method:

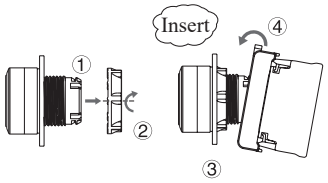

Removal method:

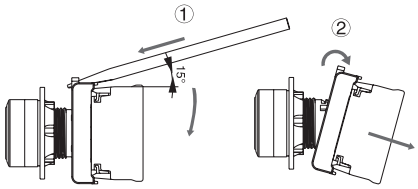

TGLA1 Series Button Switch

6.4 When several buttons are installed on the control panel side by side on the control panel, the distance between the center line of the buttons in the same row and the center line of each row of buttons shall not be less than the values listed in the following table.

Table 3

Name	size	
	a	b
General buttons, illuminated buttons, short-handle knobs, key buttons	30.5	60
φ40mm mushroom button, long-handle knob, φ30mm E-stop button, φ40mm E-stop button	45	60
φ60mm mushroom button, φ60mm E-stop button	65	70

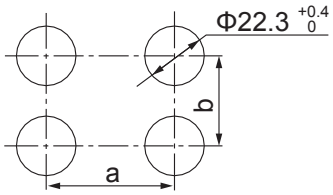

Table 4

Name	Variety	Model specification	Auxiliary code	LED lamp voltage	color	Dimensions
Flat button	General	TGLA1-P/ZP □□	/	/	Lighting: White Green Red Yellow Blue Without lighting: White Green Red Yellow Blue Black	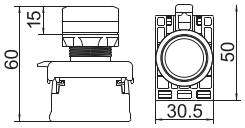
		TGLA1-DP/DZP □□		AC/DC6V AC/DC12V AC/DC24V AC/DC48V AC/DC110V AC/DC220V AC380V		
High button	General	TGLA1-G/ZG □□	/	/	Lighting: White Green Red Yellow Blue Without lighting: White Green Red Yellow Blue Black	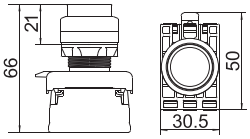
		TGLA1-DG/DZG □□		AC/DC6V AC/DC12V AC/DC24V AC/DC48V AC/DC110V AC/DC220V AC380V		

TGLA1 Series Button Switch

Table 4, continued

Name	Variety	Model specification		Auxiliary code	LED lamp voltage	color	Dimensions
Mushroom head self-reset button	General	TGLA1-M □□	4:Φ40mm 6:Φ60mm	/	/	Lighting: White Green Red Yellow Blue Without lighting: White Green Red Yellow Blue Black	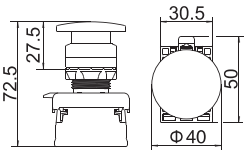
		TGLA1-DM □□			AC/DC6V AC/DC12V AC/DC24V AC/DC48V AC/DC110V AC/DC220V AC380V		
Short-handle knob	Knob	TGLA1-DX □□		21: Two-position lock 22: Two-position reset 31: Three-position lock 32: Three-position reset 33: Three-position left lock and right reset 34: Three-position left and right lock	/	Lighting: White Green Red Yellow Blue Without lighting: White Green Red Yellow Blue Black	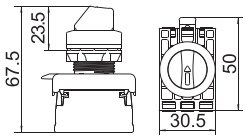
		TGLA1-DDX □□			AC/DC6V AC/DC12V AC/DC24V AC/DC48V AC/DC110V AC/DC220V AC380V		
Long-handle knob	Knob	TGLA1-CX □□		21: Two-position lock 22: Two-position reset 31: Three-position lock 32: Three-position reset 33: Three-position left lock and right reset 34: Three-position left and right lock	/	Lighting: White Green Red Yellow Blue Without lighting: White Green Red Yellow Blue Black	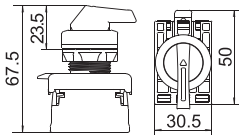
		TGLA1-DCX □□			AC/DC6V AC/DC12V AC/DC24V AC/DC48V AC/DC110V AC/DC220V AC380V		

TGLA1 Series Button Switch

Table 4, continued

Name	Variety	Model specification		Auxiliary code		LED lamp voltage	color	Dimensions
Key button	Key button	TGLA1-YE □□		21: Two-position lock 22: Two-position reset	0: Two-position lock Two-position pull out 1: Two-position reset Middle pull out 2: Two-position lock Middle pull out	/	/	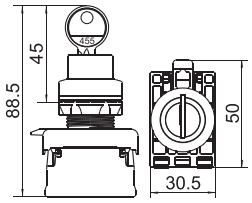
				31: Three-position lock 32: Three-position reset 33: Three-position left lock and right reset 34: Three-position left and right lock	0: Three position lock Three-position pull out 1: Three-position reset Middle pull out 2: Three-position lock Left/middle pull out 3: Three position lock Right/middle pull out 4: Three position lock Middle pull out 5: Three-position left lock Right reset Left/middle pull out 6: Three-position left lock Right reset, middle pull out 7: Three-digit left reset Right lock center / right pull out 8: Three-position left reset Right lock, middle pull out			
Rotate to release E-stop button	Rotate to release E-stop button	TGLA1-XF □□	3:Φ30mm 4:Φ40mm 6:Φ60mm	/		/	Red	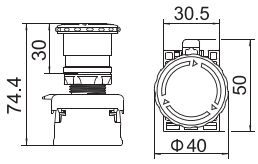

7 Ordering Notice

Please specify the following items when ordering the product from our company:

a. Product name and model;

b. Order quantity.

Order example:

AC/DC 220V 1 Normally Close +1 Normally Open Illuminated red flat buttons, 100 pcs:

TGLA1-DP5 AC/DC220V red 100 pcs.

LAY5 Series Button Switch

1 Overview

LAY5 series button switch is suitable for AC 50Hz industrial control circuit with rated working voltage up to 380V and with DC working voltage up to 220V as line control for electrical devices such as magnetic starter, contactor, and relay, and for light signal indication application with its indicator button.

2 Type Designation

LA Y 5 - □ □ □□

- Specification code
- Derived variety
- Structure category: B: metal head, E: plastic head
- Design code
- General
- Button

Derived variety and specification code

Derived variety	Specificaiton code		
A: Flat button C: φ40 mushroom reset button R: φ60 mushroom reset button	1: White 2: Black 3: Green 4: Red 5: Yellow 6: Blue	1: NO 2: NC 3: 2 NO 4: 2 NC 5: NO + NC	-
S: Mushroom self-lock, rotation reset	4: φ30 5: φ40	4: Red	2: NC
D: Knob J: Rotary handle G: Key button	2: Two-position lock 3: Three-position lock 4: Two-position reset 5: Three-position reset	1: NO 2: NC 3: Two NO 4: Two NC 5: NO + NC	-
W3: Illuminated button	1: White 3: Green 4: Red 5: Yellow 6: Blue	6: Direct type 7: Resistance type	1: NO 2: NC 3: Two NO 4: Two NC 5: NO + NC
BE: Accessories (without structural classification code)	101: NO contact set 102: NC contact set	-	-

LAY5 Series Button Switch

3 Technical Parameters

Table 1

Rated insulation voltage Ui (V)	660		
Resistive current Ith (A)	10		
Rated working voltage Ue (V)		380	220
Rated working curren Ie (A)	AC-15	2.5	-
	DC-13	-	0.3

Table 2

Power frequency withstand volage	AC 1890V, 50Hz 5s
Contact resistance	≤50mΩ
Mechanical life	Flat-end and mushroom head: 1 million times; illuminated type: 300,000 times; others: 100,000
Electrical life	Flat-end, mushroom head, DC: 200,000 times; others: 100,000 times
Protection grade	IP40

Rated voltage (V)	Direct-type						
Eelctric light source	6.3	12	24	48	110	220	380
LED light	√	√	√	-	-	-	-
Neon light	√	√	√	√	√	√	√

4 Operating Conditions

4.1 Ambient temperature: Not exceed +40°C, and the mean temperature within 24h does not exceed +35°C; the lower limit of ambient air temperature is -5°C.

4.2 Altitude: Not exceed 2,000 meters.

4.3 Atmospheric condition: The relative air humidity does not exceed 50% at the highest temperature +40°C; a higher relative humidity is allowed at a lower temperature, such as up to 90% at +20°C; special measures are taken for condensation occurred occasionally due to temperature changes.

4.4 Pollution degree: 3.

4.5 Installation category: Class II.

5 Structure Features

5.1 The metal button adopts anti-play operating head, and cannot be removed from the front side.

5.2 All contacts have dual functions of switching circuit and self-cleaning, and the contacting reliability can still be guaranteed under low voltage and small current.

5.3 The NO contact set is independent from the NC contact set, and they can be combined as required for convenient replacement.

5.4 The concealed wiring terminal is used for safer and more reliably operation. The operating head of metal-head button and its base are made of galvanized alloy, providing artistic shape and solid structure.

5.5 BA9S lamp base is used for both illuminated bush and signal lamp, and different light source is selected as required.

LAY5 Series Button Switch

Sketch	Outline drawing and dimensions	Enterprise model		Remarks	
Flat button	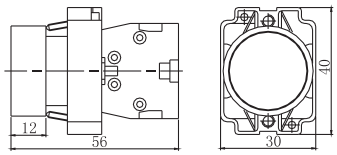	LAY5-BA21		Black	1 NO
		LAY5-BA31		Green	1 NO
		LAY5-BA42		Red	1 NC
		LAY5-BA51		Yellow	1 NO
		LAY5-BA61		Blue	1 NO
		LAY5-BA25		Black	1 NO + 1 NC
		LAY5-BA35		Green	1 NO + 1 NC
		LAY5-BA45		Red	1 NO + 1 NC
Mushroom self-reset	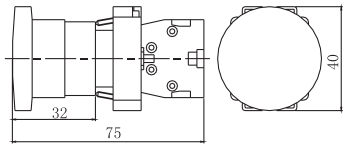	LAY5-BC21	Φ40	Black	1 NO
		LAY5-BC31	Φ40	Green	1 NO
		LAY5-BC42	Φ40	Red	1 NC
		LAY5-BC51	Φ40	Yellow	1 NO
		LAY5-BR42	Φ60	Red	1 NC
Mushroom self-lock	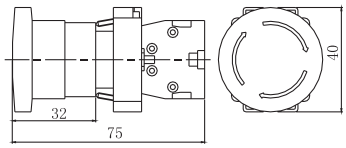	LAY5-BS442	Φ30	Red	1 NC
		LAY5-BS542	Φ40		
	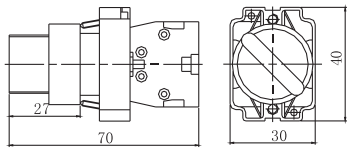	LAY5-BD21	Two-position lock		1 NO
		LAY5-BD25	Two-position lock		1 NO + 1 NC
		LAY5-BD33	Three-position lock		2 NO
		LAY5-BD41	Two-position reset		1 NO
		LAY5-BD45	Two-position reset		1 NO + 1 NC
		LAY5-BD53	Three-position reset		2 NO
	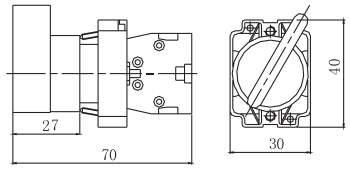	LAY5-BJ21	Two-position lock		1 NO
		LAY5-BJ25	Two-position lock		1 NO + 1 NC
		LAY5-BJ33	Three-position lock		2 NO
		LAY5-BJ41	Two-position reset		1 NO
		LAY5-BJ45	Two-position reset		1 NO + 1 NC
		LAY5-BJ53	Three-position reset		2 NO
	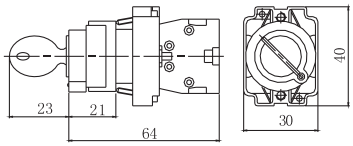	LAY5-BG21	Two-position lock		1 NO
		LAY5-BG25	Two-position lock		1 NO + 1 NC
		LAY5-BG33	Three-position lock		2 NO
		LAY5-BG41	Two-position reset		1 NO
		LAY5-BG53	Three-position reset		2 NO

LAY5 Series Button Switch

Sketch	Outline drawing and dimensions	Enterprise model			Remarks
Illuminated button	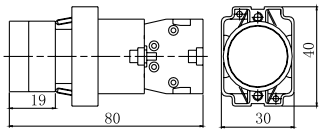	LAY5-BW3361	Green	Direct-type 1 NO	
		LAY5-BW3462	Red	Direct-type 1 NO	6.3~380V
		LAY5-BW3561	Yellow	Direct-type 1 NO	
	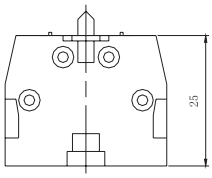	LAY5-BE101	NO contact set		
		LAY5-BE102	NC contact set		
Flat buttom	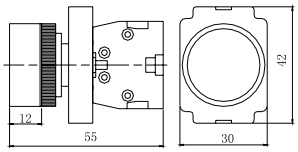	LAY5-EA21	Black	1 NO	
		LAY5-EA31	Green	1 NO	
		LAY5-EA42	Red	1 NC	
		LAY5-EA51	Yellow	1 NO	
		LAY5-EA61	Blue	1 NO	
		LAY5-EA25	Black	1 NO + 1 NC	
		LAY5-EA35	Green	1 NO + 1 NC	
		LAY5-EA45	Red	1 NO + 1 NC	
Mushroom self-reset	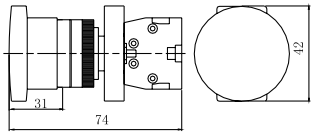	LAY5-EC21	Φ40	Black	1 NO
		LAY5-EC31	Φ40	Green	1 NO
		LAY5-EC42	Φ40	Red	1 NC
		LAY5-EC51	Φ40	Yellow	1 NO
Mushroom self-lock	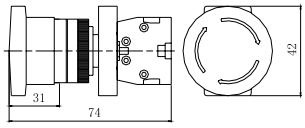	LAY5-ES442	Φ30	Red	1 NC
		LAY5-ES542	Φ30	Red	1 NC

LAY5 Series Button Switch

Sketch	Outline drawing and dimensions	Enterprise model	Remarks		
	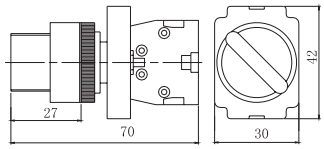	LAY5-ED21	Two-position lock	1 NO	
		LAY5-ED25	Two-position lock	1 NO + 1 NC	
		LAY5-ED33	Three-position lock	2 NO	
		LAY5-ED41	Two-position reset	1 NO	
		LAY5-ED45	Two-position reset	1 NO + 1 NC	
		LAY5-ED53	Three-position reset	2 NO	
	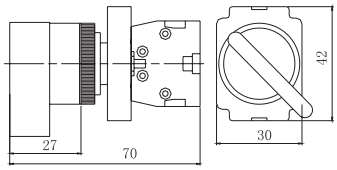	LAY5-EJ21	Two-position lock	1 NO	
		LAY5-EJ25	Two-position lock	1 NO + 1 NC	
		LAY5-EJ33	Three-position lock	2 NO	
		LAY5-EJ41	Two-position reset	1 NO	
		LAY5-EJ45	Two-position reset	1 NO + 1 NC	
		LAY5-EJ53	Three-position reset	2 NO	
	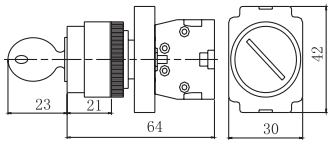	LAY5-EG21	Two-position lock	1 NO	
		LAY5-EG25	Two-position lock	1 NO + 1 NC	
		LAY5-EG33	Three-position lock	2 NO	
		LAY5-EG41	Two-position reset	1 NO	
		LAY5-EG53	Three-position reset	2 NO	
 Illuminated button	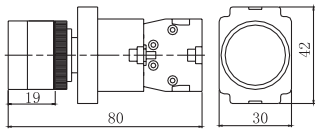	LAY5-EW3361	Green	Direct-type	1 NO
		LAY5-EW3462	Red	Direct-type	1 NC
		LAY5-EW3561	Yellow	Direct-type	1 NO
		LAY5-EW3371	Green	Ressitance-type	1 NO
		LAY5-EW3472	Red	Ressitance-type	1 NC
		LAY5-EW3571	Yellow	Ressitance-type	1 NO

6.3~ 380V

LAY5 Series Button Switch

6 Outline and Installation Dimensions

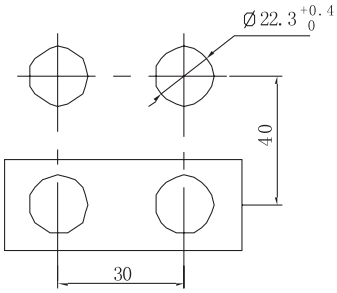

Mounting hole drawing (thick 1-6mm)

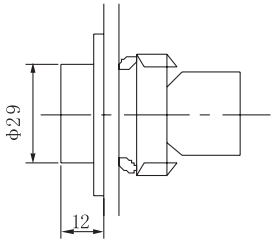

LAY5–BA..

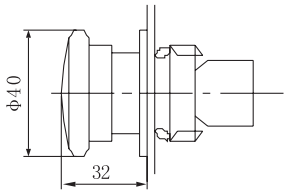

LAY5–BC..

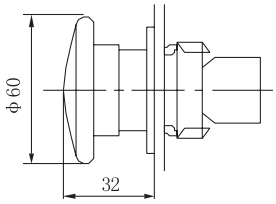

LAY5–BR..

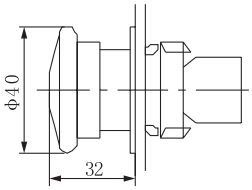

LAY5–BS5..

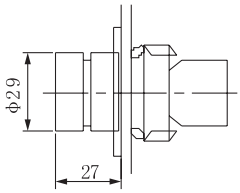

LAY5–BD..

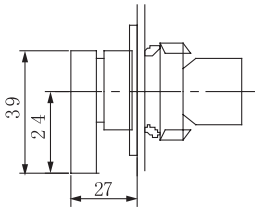

LAY5–BJ..

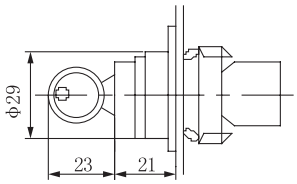

LAY5–BG..

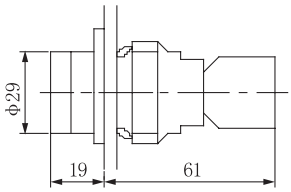

LAY5–BW..

LAY5 Series Button Switch

7 Ordering Notice

7.1 To order the separate button: specify model + color code
For example: LAY5-BA □ , number in □ means color;
□ number meaning: 1. White; 2. Black; 3. Green; 4. Red; 5. Yellow; 6. Blue.

7.2 To order the replaceable contact
For example: LAY5-BE10 □ ; number in □ means NO or NC;
□ number meaning: 1. NO; 2. NC.

TGAD1 Series Indicator

1 Overview

TGAD1 series indicators are suitable for use in AC 50Hz electrical circuits with rated working voltage of 380V and below, and DC rated working voltage of 380V and below as command signals, warning signals, accident signals and other indication signals.

2 Type Designation

TG AD 1 - □ □ □ □ □

- Color
- Rated working volage
- Protection grade (E: IP40; None code: IP65)
- Auxiliary specification code(D and M indicates the different model for the same neck size)
- Neck installation size
- Design code
- Indicators
- Enterprise code

Note: Explanation of auxiliary specification codes (D, M): D indicates an arc round lampshade, and M indicates a buzzer (see Table 1).

Table 1

Indicators	Neck installation size	Auxiliary specification code		Protection grade code	Rated working voltage	Color	Remarks
TGAD1-	22	D	/	/	AC：380V、220V AC/DC：380V、220V、127V、110V、48V、36V、24V、12V、6.3V AC：380V K30V/K60V AC：220V K30V/K60V	White Green Red Yellow Blue	Ordinary signal light
				E			Anti-interference signal light
			F	/	AC/DC380V AC/DC220V		Discharge type signal light
				E			
		WS		/	AC：380V、220V AC/DC：380V、220V、127V、110V、48V、36V、24V、12V、6.3V	Red Green	Two-color light
				E			
		WD		/			Circuit breaker indicator
				E			
		WG		/			Isolated knife switch indicator
				E			
		WN		/			Ground indicator
				E			
		M	J	E	AC：380V、220V AC/DC：220V、110V、48V、36V、24V、12V、6.3V	Black	Intermittent sound
			L				Continuous sound
			SJ			Green Red Yellow	Flash intermittent sound
			CL				Always-on continuous sound

Note: The protection grade of the TGAD1-22ME buzzer housing is not mandatory; K30V: indicates anti-interference 30V, K60V: indicates anti-interference 60V.

TGAD1 Series Indicator

3 Technical Parameters

3.1 Continuous working life ≥ 30000h.

3.2 Power frequency withstand voltage: 1890V.

3.3 Luminous colors: red, green, yellow, white, and blue.

4 Operating Conditions

4.1 Ambient air temperature: -25ºC~+50ºC; the average temperature within 24h does not exceed +45ºC; the altitude of the installation site does not exceed 2,000 meters.

4.2 Humidity: When the maximum temperature is +50ºC, the relative humidity of the air does not exceed 50%; higher relative humidity is allowed at lower temperatures.
For example: 90% at 20ºC; special measures should be taken for the occasional condensation due to temperature changes.

4.3 Pollution degree: 3.

4.4 Installation category: Class II.

5 Structure and Features

5.1 This series of products all use LED chips as luminous source, featuring with low energy consumption, high brightness, low temperature and long service life.

5.2 With wide power supply voltage, the product can work normally within ±15% of rated voltage.

5.3 With high safety performance and convenient use. The conductors are all hidden in the housing, and wires are clamped with combined screws, providing convenience for user and saving wiring time.

5.4 With small volume, light weight and good performance.

5.5 The products have attractive appearance and various varieties. With bright colors and soft light, the product can be installed on the equipment for many functions such as indication, decoration, and lighting.

5.6 Good interchangeability. With novel design, this product can be installed on the $\Phi 22.3^{+0.4}_{0}$ mounting hole, not only satisfying the export requirements but also satisfying the maintenance requirements of original old equipment.

TGAD1 Series Indicator

6 Outline and Installation Dimensions

Variety specifications	Rated working voltage	color	Outline drawing and dimensions
TGAD1-22D □	AC/DC6.3V AC/DC12V AC/DC24V AC/DC36V AC/DC48V AC/DC110V AC/DC127V AC/DC220V AC/DC380V AC220V AC380V AC220V K30V AC220V K60V AC380V K30V AC380V K60V	Red Green Yellow White Blue	
TGAD1-22WS □	AC380V AC220V AC/DC380V AC/DC220V AC/DC127V AC/DC110V AC/DC48V AC/DC36V AC/DC24V AC/DC12V AC/DC6.3V	Red Green	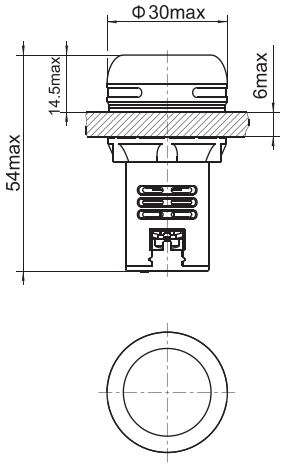
TGAD1-22WD □			
TGAD1-22WG □			
TGAD1-22WN □			

Note: The letter "K" in K30V and K60V means "anti-interference".

TGAD1 Series Indicator

Variety specifications	Rated working voltage	color	Outline drawing and dimensions
TGAD1-22MJE	AC/DC6.3V AC/DC12V AC/DC24V AC/DC36V AC/DC48V AC/DC110V AC/DC220V AC220V AC380V	Black	 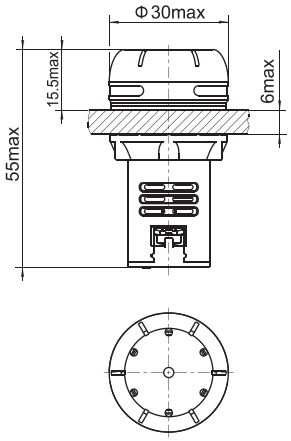
TGAD1-22MLE			
TGAD1-22MCLE		Red Green Yellow	
TGAD1-22MSJE			

7 Ordering Notice

Please specify the following items when ordering the product from our company:

a. Product name and model;

b. Order quantity.

Order example:

100 AC/DC 220V red signal lights: TGAD1-22D AC/DC220V red 100 pcs.

TGHX3 Series Switch Disconnector

1 Overview

TGHX3-63 2P

TGHX3 series switch disconnector is used in the AC 50/60 Hz power system with the rated voltage DC1500V and below, or rated operating voltage AC690V and below, and with the rated current of 63A and below. The product can be used for infrequent making and breaking operations to isolate and disconnect the line, and provide safety isolation for various low-voltage circuits in the photovoltaic field.

2 Type Designation

TGHX3-63 4P

TG H X 3 - □ P / □ / □ / □ / □ / □

- Rated voltage (V): See parameters table
- Installation: Default or M: Panel mounted
  D: Rail mounted or base plate mounted
- Wiring method: 1: Two-layer in series connection 2: Three-layer in series connection 3: Four-layer in series connection 4: AC connection 5: Two positive poles shared one negative pole
- Number of product layers: 2:2 layers, 3:3 layers, 4:4 layers
  6:6 layers, 8:8 layers, 9:9 layers
- Rated current (A): See parameter table
- Applications: P: Photovoltaic application field
- Resistive current (A):
  32:32A 63:63A
- Design code: 3
- Group code X: Rotary switch
  Class group code H: Disconnector
- Enterprise code
  TENGEN

TGHX3-63 8P

TGHX3 Series Switch Disconnector

TGHX3-63 9P

3 Main Technical Parameters

Switch disconnector basic parameters table 1

Model	Use category	Wiring method	No.	Rated voltage DC (V)	800	1000	1100	1200	1250	1500
TGHX3-63P	DC-21B DC-PV1 DC-PV2	Two layers in series (2/4/6/8 layers) Two positive and common negative (3/6/9 layers)	1	Rated current （A）	18	15	15	/	/	/
			2		25	20	20	/	/	/
			3		32	25	25	/	/	/
			4		38	30	30	/	/	/
			5		45	35	35	/	/	/
			6		50	40	40	/	/	/
	DC-21B DC-PV1		7		63	50	50	35	/	/
	DC-21B DC-PV1 DC-PV2	Three layers in series (3/6/9 layers)	8		/	/	/	/	12	10
			9		/	/	/	/	16	13
			10		/	/	/	/	20	16
			11		/	/	/	/	24	20
			12		/	/	/	/	28	23
			13		/	/	/	/	32	26
	DC-21B DC-PV1		14		/	/	/	/	40	32
	Use category	Wiring method	No.	Rated voltage AC（V）	400	690	/	/	/	/
	AC-22B	AC connection (2/3/4 layers)	15	Rated current （A）	63	63	/	/	/	/

Model	Use category	Wiring method	No.	Rated voltage DC (V)	600	800	1000	1100	1200	1500
TGHX3-32P	DC-21B DC-PV1	Two layers in series (2/4/6/8 layers)	1	Rated current （A）	/	16	12.5	7.5	/	/
			2		30	20	/	16	/	/
			3		32	32	20	20	/	/
		Three layers in series (3/6/9 layers)	4		/	/	32	/	/	/
		Four layers in series (4/8 layers)	5		/	/	/	/	/	25
		Two positive and common negative (3/6/9 layers)	6		32	20	13	13	/	/
	DC-21B DC-PV2	Two layers in series (2/4/6/8 layers)	7		30	/	/	7.5	/	/
			8		32	20	12.5	10	7.5	/
		Two positive and common negative (3/6/9 layers)	9		32	20	12.5	/	7.5	/
	Use category	Wiring method	No.	Rated voltage AC（V）	230	400	690	/	/	/
	AC-22B	AC connection (2/3/4 layers)	10	Rated current （A）	32	32	32	/	/	/

TGHX3 Series Switch Disconnector

Parameter name	Type/Unit	Specific parameters
Frame current	A	32/63
Insulation voltage	V	DC 1500/AC 690
Rated impulse withstand voltage	kV	8
Rated short-time withstand current Icw	kA/1s	0.76
Rated short-circuit making capacity Icm	kA	1.4
Mechanical life	Times	10000
Electrical life	Times	300
Operating torque	N·m	1.6 ～ 2.2
Fixed torque of machine	N·m	2.0 ～ 2.5
Wiring torque	N·m	1.5 ～ 1.7
Fixed torque of handle	N·m	0.6 ～ 0.75
Wiring area (Recommended)	mm^2	Implemented according to the Table 9 in GB/T 14048.1
Installation method	Handle cabinet door installation, rail installation (installed on the TH37-7.5 standard rail)	
Protection grade	Machine: IP20 (except for terminals) Handle outside the cabinet: IP66	

4 Normal working and installation conditions

Normal working conditions

- Ambient temperature: The upper limit of the temperature does not exceed +86℃, and the lower limit is not below -40℃; (when out of the standard operating temperature, please contact the manufacturer)
- Altitude: The altitude at the installation site does not exceed 3000m, and the derating is required when more than 3000m, as listed in table below;

Altitude derating coefficient				
Altitude	3000	3500	4000	4500
Operating current correction coefficient	1	0.95	0.93	0.9
Operating voltage correction coefficient	1	0.9	0.83	0.8

- Atmospheric conditions: The atmosphere is clean (there is no medium without explosive hazard, and there are no gases and dust sufficient to cause metal corrosion and insulation damage in the medium); the relative humidity of the atmosphere does not exceed 50% at the ambient air temperature of +40 °C, and higher relative humidity is allowed at lower temperatures (for example, when the temperature is +20 °C, the relative humidity does not exceed 90%); appropriate measures are taken for condensations occurred on the product surface due to temperature changes.
- Installed in a place where there is medium without explosive hazard and there is no gas and conductive dust sufficient to cause metal corrosion and insulation damage;
- Installed in a place where there is no severe impact and vibration and no rain and snow immersion.

Normal installation conditions

- Installation category: Class III, Class IV;
- Installation environmental Pollution degree: 3;
- Protection grade: IP20;

  Protection grade at the handle: IP66;
- Installation method: Panel mounted, rail mounted (installed on TH35-7.5 standard rail).

TGHX3 Series Switch Disconnector

5 Wiring Method

5.1 DC product two-layer in series wiring diagram

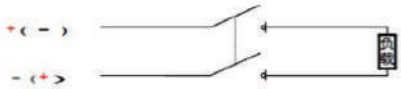

Two-layer in series 2-layer outline

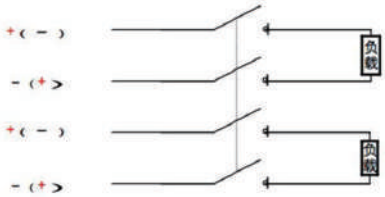

Two-layer in series 4-layer outline

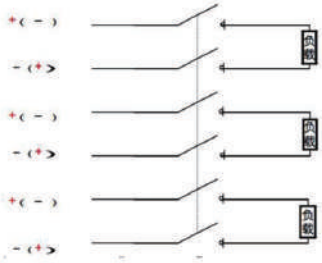

Two-layer in series 6-layer outline

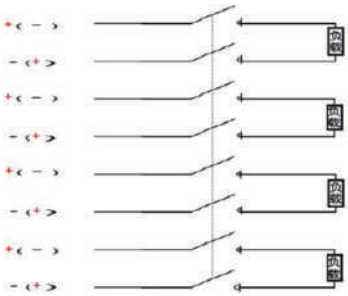

Two-layer in series 8-layer outline

5.2 DC product two positive poles shared one negative pole wiring diagram

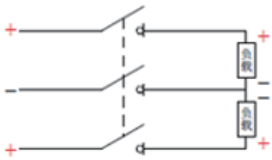

Two positive poles shared one negative pole 3-layer outline

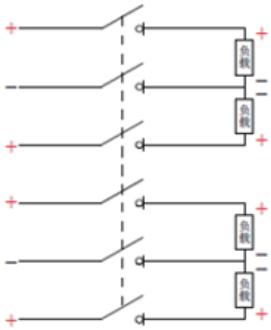

Two positive poles shared one negative pole 6-layer outline

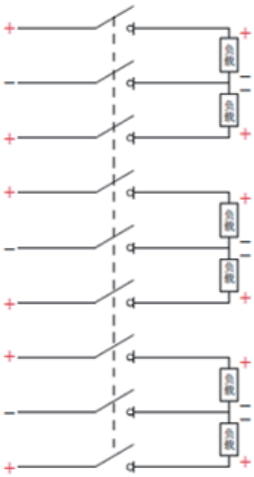

Two positive poles shared one negative pole 9-layer outline

TGHX3 Series Switch Disconnector

5.3 DC product three-layer in series wiring diagram

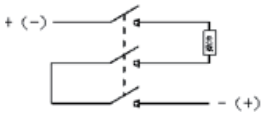

Three-layer in series 3-layer outline

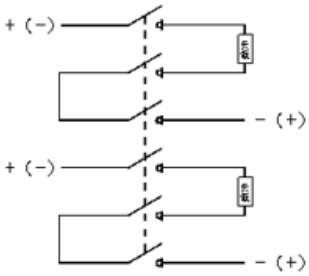

Three-layer in series 6-layer outline

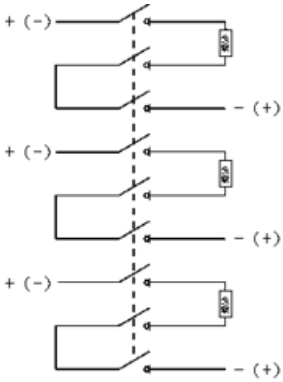

Three-layer in series 9-layer outline

5.4 DC product four-layer in series wiring diagram

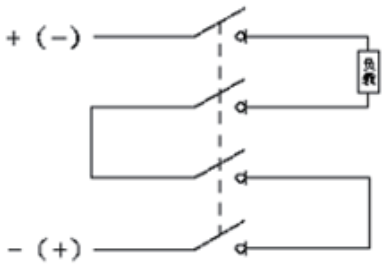

Four-layer in series 4-layer outline

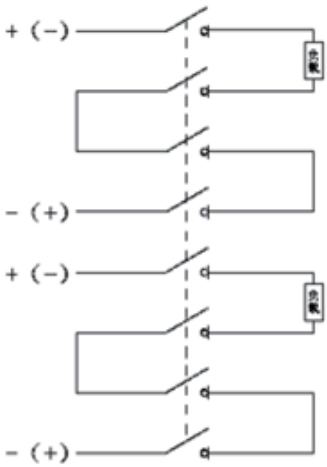

Four-layer in series 8-layer outline

5.5 AC product wiring diagram

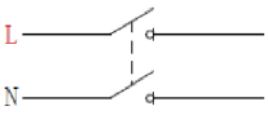

2-layer outline

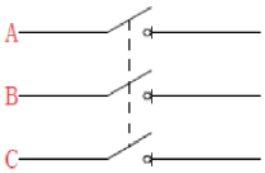

3-layer outline

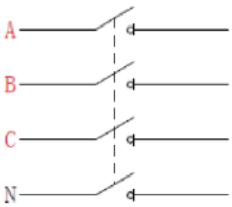

4-layer outline

TGHX3 Series Switch Disconnector

6 Outline and Installation Dimensions

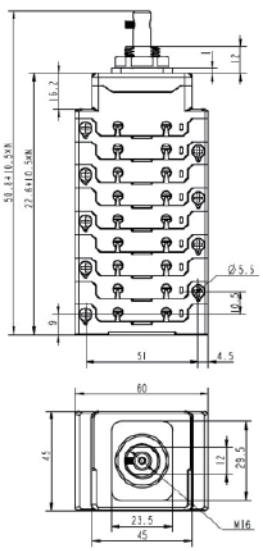

Panel mounted (mounting screw)

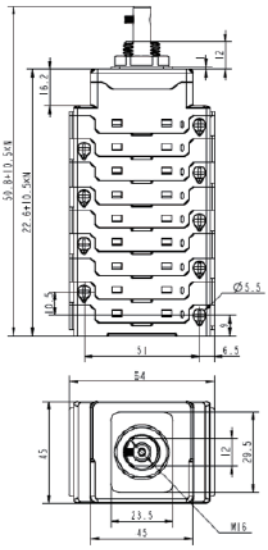

Rail mounted (mounting screw)

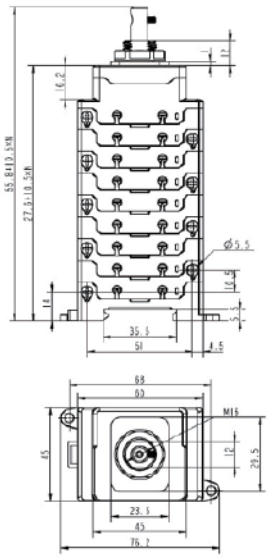

Panel mounted (mounting wiring frame)

Note: N is the number of the poles of product

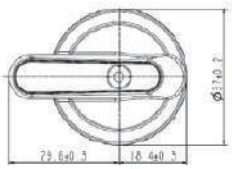

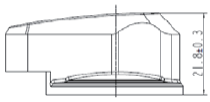

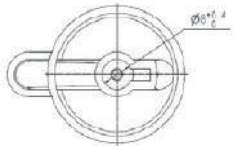

Handle outline dimensions

7 Installation method

7.1 Panel mounted

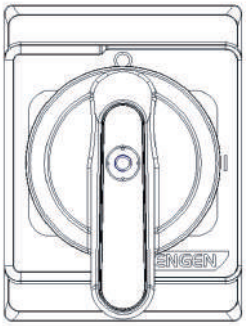

Panel indicator

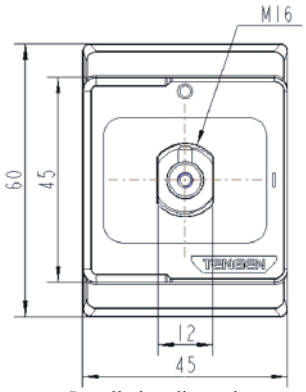

Installation dimensions

State position: The product has two position states namely closing position “I/ON” and opening position “O/OFF”, as shown in the above figure.

TGHX3 Series Switch Disconnector

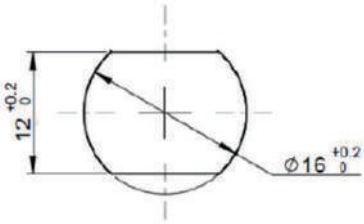

Hole size

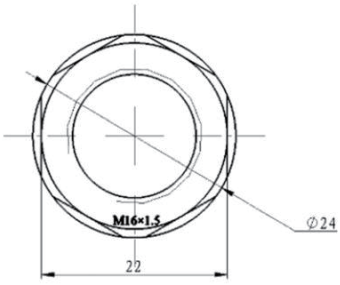

Product fixed nut

7.2 Rail mounted

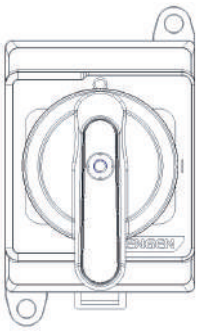

Panel indicator

Status positions: There are two position status for this product, namely OFF position “I/ON” and ON position “I/OFF”, as shown in the left figure

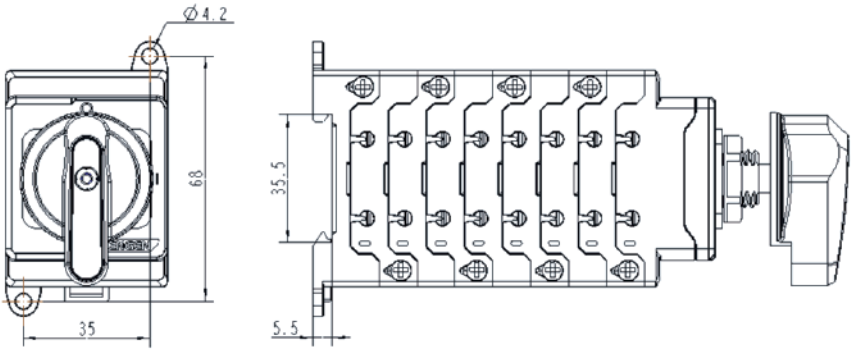

Installation dimensions

TGHX3 Series Switch Disconnector

8 Installation, Operation and Maintenance

The manufacture will provide the after-sales service for any damage or failure to work normally due to poor manufacturing under the conditions of normal installation, operation and inspection of the product.

9 Precautions

- User is solely responsible for quality problem caused by the product unpacking without permission;
- Do not touch the exposed part of the non-insulating part of the switch disconnector in the energized state with your hands.
- Wiring must be connected reliably to prevent burns to the terminal block of the switch disconnector due to excess heating.

10 Ordering Notice

Please specify the following items when ordering:

- Product name, such as TGHX3-63P/18/4/1/M/800 switch disconnector;
- Frame current, such as 63:63A;
- Rated current: such as 18:18A;
- Number of layers, such as 4:4 layers;
- Wiring method: 1: two-layer in series;
- Installation methods, such as M: panel mounted;
- Rated voltage: 800:800V;
- Qty., such as 100 units

Order example: TGHX3-63P/18/4/1/M/800, 100 units.

LW28 Series CAM Switch

1 Overview

LW28 Series CAM Switches is mainly used in AC 50Hz main circuit with a rated working voltage of 380V and below and with a DC voltage of 220V and below for power-on, power-off and change-over of circuit and also for direct master control and circuit measurement.

2 Type Designation

LW 28 - 20 □ □ / □ □

- Handle type: None: ordinary type, "Y":key type
- Number of contact system sections
- Operation diagram No. (1 ~ 9001 ~ 990001 ~ 9999) , None: conventional operation diagram
- Feature code (Table 2), "Z": self recovery, None: fixed
- Conventional thermal current
- Design code
- Universal transfer switch

3 Technical Parameters

Table 1

Name	LW28-20	
	AC-15	DC-13
Rated working voltage Ue (V)	380	220
Rated working current Ie (A)	1.5	0.14
Rated insulation voltage Ui(V)	550	
Resistive current Ith (A)	20	
Electrical life (times)	20×10^4	6×10^4
Mechanical life (times)	30×10^4	
Operating frequency (times/h)	120	

4 Others

4.1 Classification

4.1.1 There are main circuit change-over, direct control motor and master control according to the purpose.

4.1.2 There are location type, self-reset type and location and self-reset type.

4.1.3 There are location type 1-12 sections, self-reset 1-3 sections, and direct control motor 1-6 sections according to the number of the contact system sections.

4.1.4 There are 30°, 45°, 60°, and 90° according to the operating angle.

LW28 Series CAM Switch

4.2 Classified according to the operating method and operator position (see Table 2)

Table 2

Use category	Feature code	Operator position
Self-reset	A	0° 30°
	B	30° 0° 30°
Location type	C	0° 90° 0° 30°
	D	90° 0° 90° 30° 0° 30°
	E	90° 0° 90° 180° 30° 0° 30° 60°
	F	60° 30° 0° 30° 60°
	G	60° 30° 0° 30° 60° 90°
	H	90° 60° 30° 0° 30° 60° 90°
	I	90° 60° 30° 0° 30° 60° 90° 120°
	J	120° 90° 60° 30° 0° 30° 60° 90° 120°
	K	120° 90° 60° 30° 0° 30° 60° 90° 120° 150°
	L	150° 120° 90° 60° 30° 0° 30° 60° 90° 120° 150°
	M	150° 120° 90° 60° 30° 0° 30° 60° 90° 120° 150° 180°
	N	45° 45°
Location type	Z	30° 0° 60° 135° 90° 0° 45°
Self-set type		90° 0° 45°

4.3 Wiring diagram of common control switch used in LW28 series voltage and current measurement switching box

Phase voltage phase-change switch

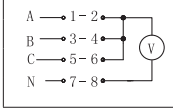

LW28-20/YH1/2	0	UA	UB	UC
	0°	90°	180°	270°
1-2		×		
3-4			×	
5-6				×
7-8		×	×	×

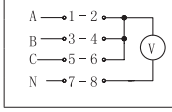

LW28-20/YH3/2	UA	UB	UC
	90°	0°	90°
1-2	×		
3-4		×	
5-6			×
7-8	×	×	×

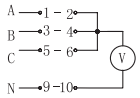

LW28-20/YH1/3	0	UA	UB	UC
	0°	90°	180°	270°
1-2		×		
3-4			×	
5-6				×
9-10		×	×	×

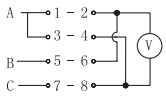

LW28-20/YH2/2	0	UAB	UBC	UCA
	0°	90°	180°	270°
1-2				×
3-4		×		
5-6		×	×	
7-8			×	×

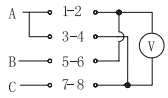

LW28-20/YH4/2	UAB	UBC	UCA
	90°	0°	90°
1-2			×
3-4	×		
5-6	×	×	
7-8		×	×

Line voltage phase-change switch

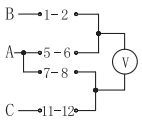

LW28-20-YH2/3	0	UAB	UBC	UCA
	0°	90°	180°	270°
1-2		×	×	
5-6				×
7-8		×		
11-12			×	×

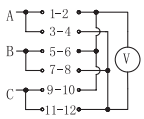

LW28-20-YH3/3	0	UAB	UBC	UCA
	0°	90°	180°	270°
1-2		×		
3-4				×
5-6			×	
7-8		×		
9-10				×
11-12			×	

LW28 Series CAM Switch

Three-phase line voltage and three-phase phase voltage phase-change switch

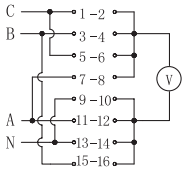

LW28-20-YH5/4	UCA	UBC	UAB	0	UAN	UBN	UCN
	135°	90°	45°	0°	45°	90°	135°
1-2		×					×
3-4			×			×	
5-6	×						
7-8					×		
9-10					×		×
11-12	×		×				
13-14						×	
15-16		×					

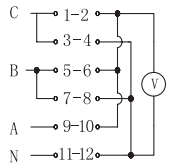

LW28-20-YH5/3	UCA	UBC	UAB	0	UAN	UBN	UCN
	135°	90°	45°	0°	45°	90°	135°
1-2		×					×
3-4	×						
5-6	×					×	
7-8		×	×				
9-10	×		×		×		
11-12					×	×	×

Current measurement transfer switch

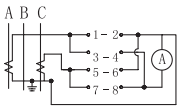

LW28-20 LH2/2	0	IA	IB	IC
	0°	90°	180°	270°
1-2	×			×
3-4		×	×	
5-6	×	×		
7-8			×	×

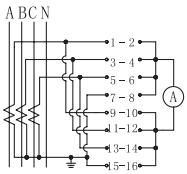

LW28-20 LH2/4	0	IA	IB	IC
	0°	90°	180°	270°
1-2	×	×	×	
3-4	×		×	×
5-6	×	×		×
7-8		×	×	×
9-10				×
11-12		×		
13-14			×	
15-16	×			

Break during direct start and operation

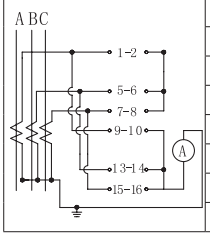

LW28-20 LH3/4	0	IA	IB	IC
	0°	90°	180°	270°
1-2	×	×		×
5-6	×		×	×
7-8	×	×	×	
9-10			×	
13-14		×		
15-16				×

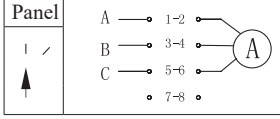

LW28-20/Q1/5.5	0	1
	0°	60°
1-2		×
3-4		×
5-6		×
7-8		

LW28 Series CAM Switch

5 Outline and Installation Dimensions

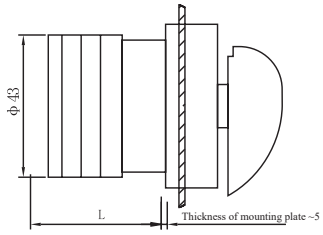

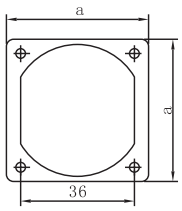

L= 22+9.6n a= 48×48

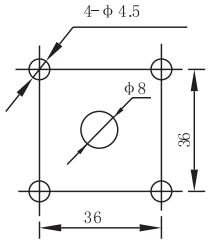

Installation dimensions

6 Ordering Notice

Please specify the complete model of switch when ordering.

For example: To order the universal change-over switch, the wiring diagram type is order code LW28-20 D303/2.

Wiring diagram No.	D303		
Conversion angle	60°	0°	60°
1-2	×		×
3-4	×		
5-6			×
7-8	×		×

LXW5 Series Limit Switch

1 Overview

LXW5 Series Limit Switch is suitable for AC 50Hz control line with a rated voltage up to 380V or with a DC voltage up to 220V for stroke control, interlocking and limit protection of various mechanical devices.

2 Type Designation

LX W 5-1 1 □

- Operating type (see Table 1)
- Number of break contacts
- Number of make contacts
- Design code.
- Micro switch
- Stroke switch

Table 1

Mark	Meaning
D1	Short-spring plunger type
G1	Hinged roller long-lever type
G3	Hinged roller short-lever type
G2	Hinged roller middle-lever type
M	Panel-mounted plunger type
N1	Hinged long-lever type
N2	Hinged short-lever type
Q1	Panel-mounted roller plunger type
Q2	Panel-mounted cross roller plunger type
Z	Push-rod plunger type

3 Technical Parameters

3.1 Technical data see Table 2

Table 2

Model	Rated voltage (V)	Rated control capacity	Resistive current (A)
LXW5	AC380、220、110	AC100VA	3
	DC220、110、24	DC10W	

3.2 Operating parameters see Table 3

Table 3

Model	Action force (N)	Reset force (N)
LXW5-11D	1~3.5	>0.8
LXW5-11M	2.5~5.3	>1
LXW5-11Q1	2~3.8	>1
LXW5-11Q2	2~3.8	>1
LXW5-11N1	0.3~0.8	>0.15
LXW5-11N2	0.5~1	>0.25
LXW5-11G1	0.35~0.85	>0.15
LXW5-11G2	0.8~1.6	>0.25
LXW5-11G3	0.4~0.9	>0.2

LXW5 Series Limit Switch

4 Operating Conditions

4.1 Ambient temperature: -5℃~+40℃.

4.2 Altitude: Not exceed 2,000 meters.

4.3 Atmospheric conditions: The relative humidity does not exceed 50% when the ambient temperature is +40℃; higher relative humidity is allowed at a lower temperature. The mean maximum relative humidity of the wettest month is 90%, and the mean month minimum temperature of this month is +25℃, and condensation on the product surface due to temperature changes shall be considered.

4.4 Pollution degree: 3.

4.5 Installation category: Class II, mounted at any angle.

5 Outline and Installation Dimensions

Outline and installation dimensions of the micro switch see Fig. 1 to Fig. 10.

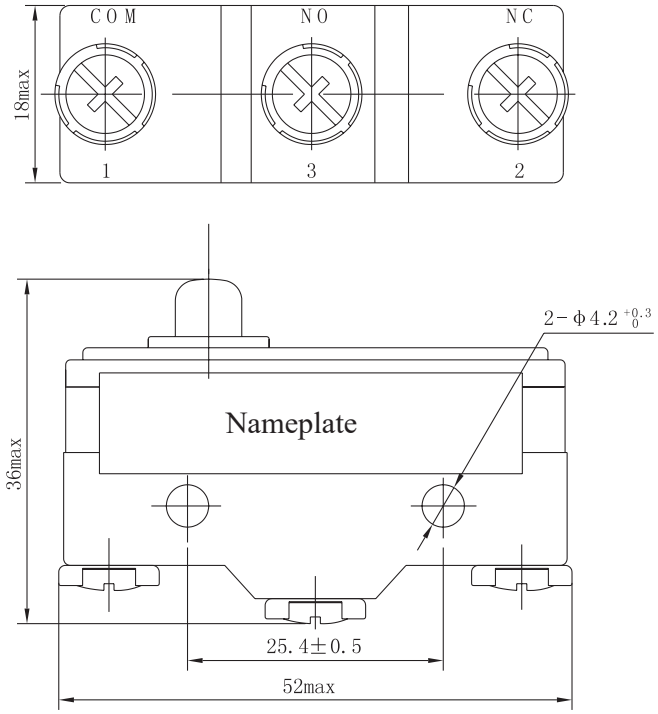

Fig. 1 LXW5–11D1

LXW5 Series Limit Switch

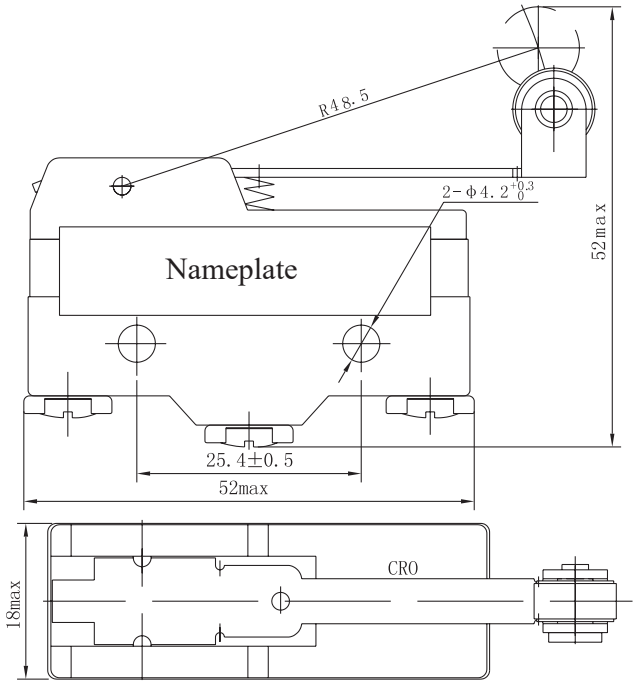

Fig. 2 LXW5–11G1

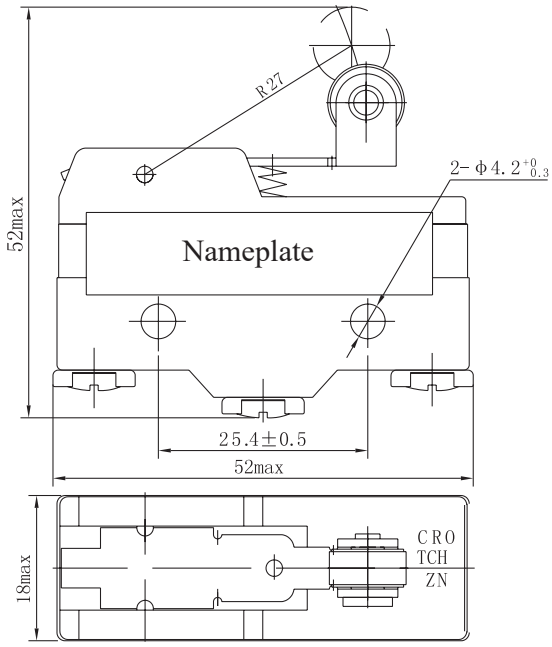

Fig. 3 LXW5–11G2

LXW5 Series Limit Switch

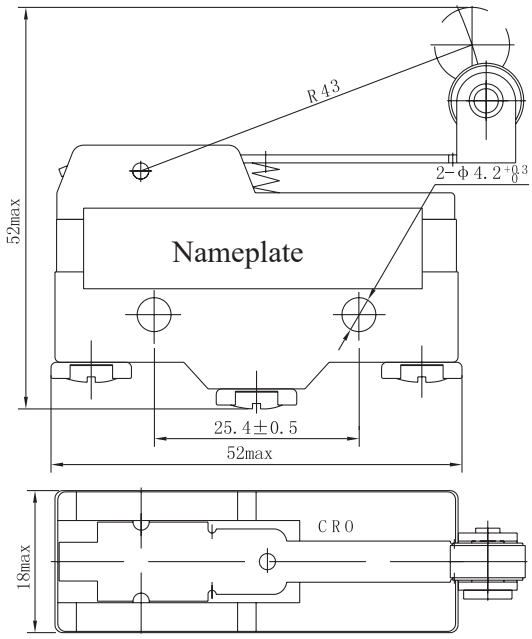

Fig. 4 LXW5-11G3

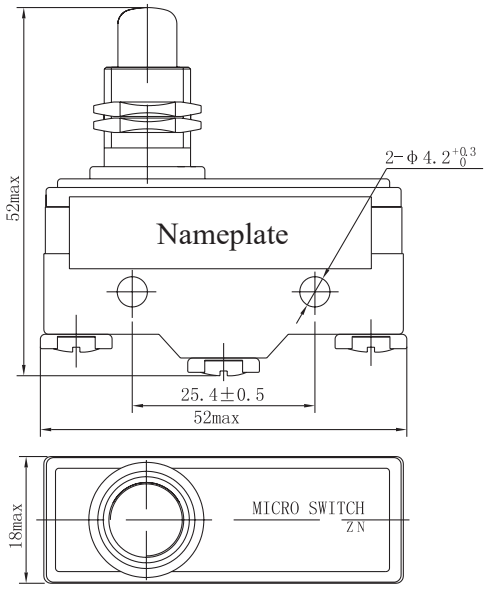

Fig. 5 LXW5-11M

LXW5 Series Limit Switch

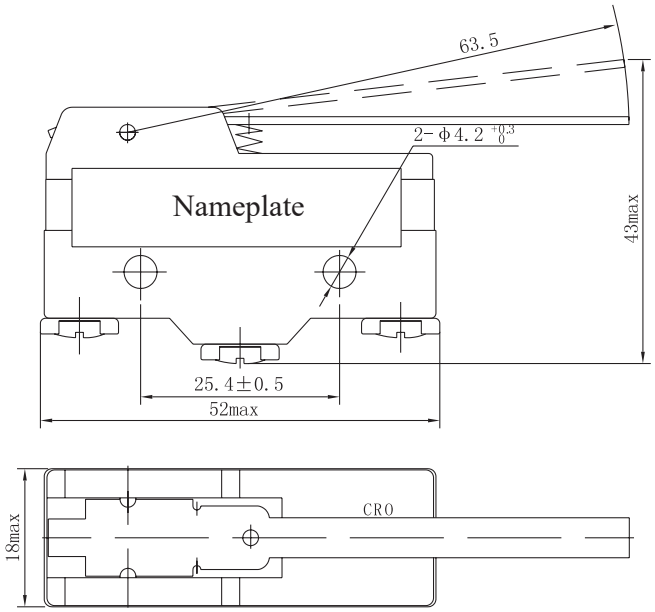

Fig. 6 LXW5-11N1

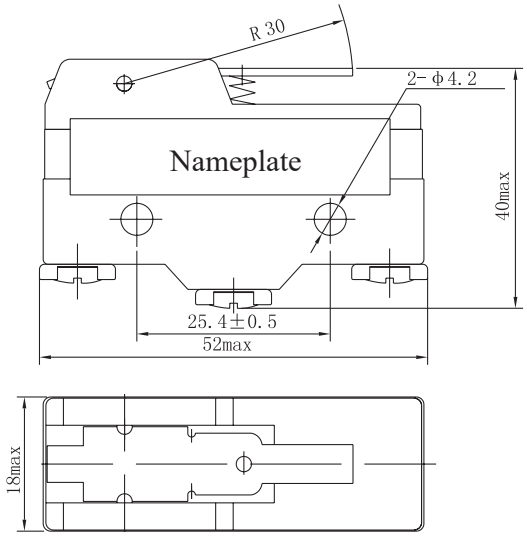

Fig. 7 LXW5-11N2

LXW5 Series Limit Switch

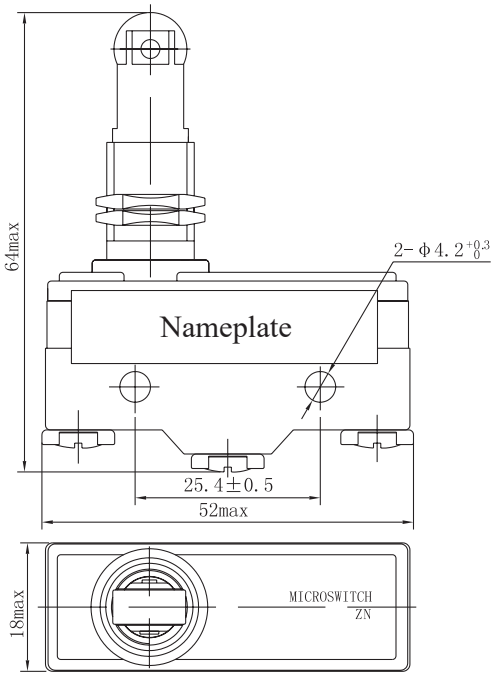

Fig. 8 LXW5-11Q1

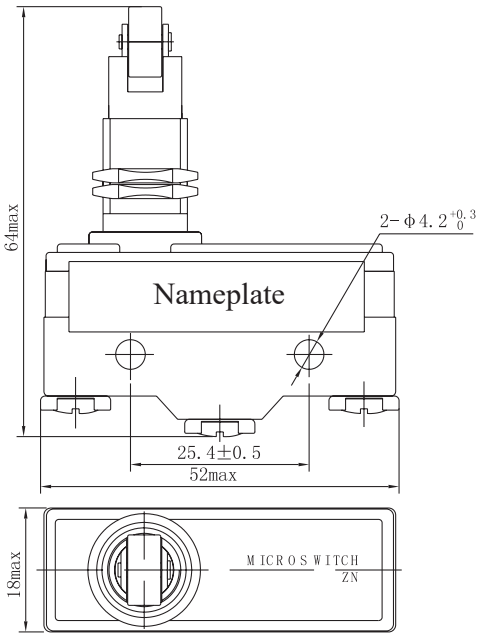

Fig. 9 LXW5-11Q2

LXW5 Series Limit Switch

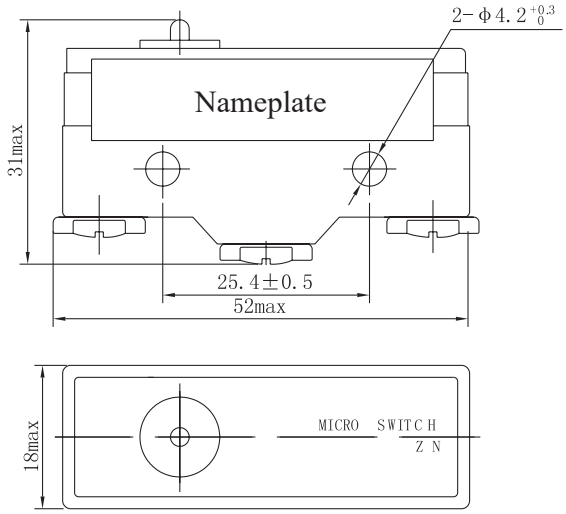

Fig. 10 LXW5-11Z

6 Ordering Notice

Please specify the following items when ordering the product from our company:

a.Product model and name

b.Order quantity.

ME Series Limit Switch

1 Overview

ME Series Limit Switch is used in AC 50Hz circuit with a rated voltage up to 380V or a DC voltage up to 220V and with a current 5A for automatic control of the machine machinery and for moving mechanism action limit and program control.

2 Type Designation

ME - □

- □ — Operating system code (see Table 1)
- ME — Stroke switch

Table 1

Operating system code	Operating method
8104	Roller rotary arm
8107	Adjustable rotary rod
8108	Adjustable roller rotary rod
8111	Direct-pressure plunger type
8112	Direct-pressure plunger lateral wheel
8122	Direct-pressure plunger vertical wheel
8166	Universal spring soft rod(Plastic head)
8169	Universal spring soft rod(Steel wire head)
9101	Universal spring soft rod(Metal head)

3 Technical Parameters

3.1 Rated insulation voltage Ui: 380V

3.2 Resistive current Ith: 5A

3.3 Rated working voltage Ue: AC 380V, DC 220V.

3.4 Rated working current Ie: AC 0.8A, DC 0.16A.

3.5 Rated control capacity: AC300VA, DC20W.

3.6 Operating parameters see Table.

Model	Operating method	Action travel	Full travel	Operating force
ME-8104	Roller rotary arm	≤20°	≥75 °	≤6N
ME-8107	Adjustable rotary rod			≤(3.4~ 8)N
ME-8108	Adjustable roller rotary rod			≤(2~8)N
ME-8111	Direct-pressure plunger type	≤1.5mm	≥4mm	≤9N
ME-8112	Direct-pressure plunger lateral wheel			
ME-8122	Direct-pressure plunger vertical wheel			
ME-8166	Universal spring soft rod	≤30mm	-	≤0.9N
ME-8169				
ME-9101				

ME Series Limit Switch

4 Operating Conditions

4.1 Ambient temperature: -5°C~+40°C.

4.2 Altitude: Not exceed 2,000 meters.

4.3 Atmospheric conditions: The relative humidity does not exceed 50% when the ambient temperature is +40°C; higher relative humidity is allowed at a lower temperature. The mean maximum relative humidity of the wettest month is 90%, and the mean month minimum temperature of this month is +25°C, and condensation on the product surface due to temperature changes shall be considered.

4.4 Pollution degree: 2.

4.5 Installed at a place where there is no obvious shaking, impact or vibration.

4.6 Install before or after the plate, fixed with screws, and mounted at any angle.

5 Outline and Installation Dimensions

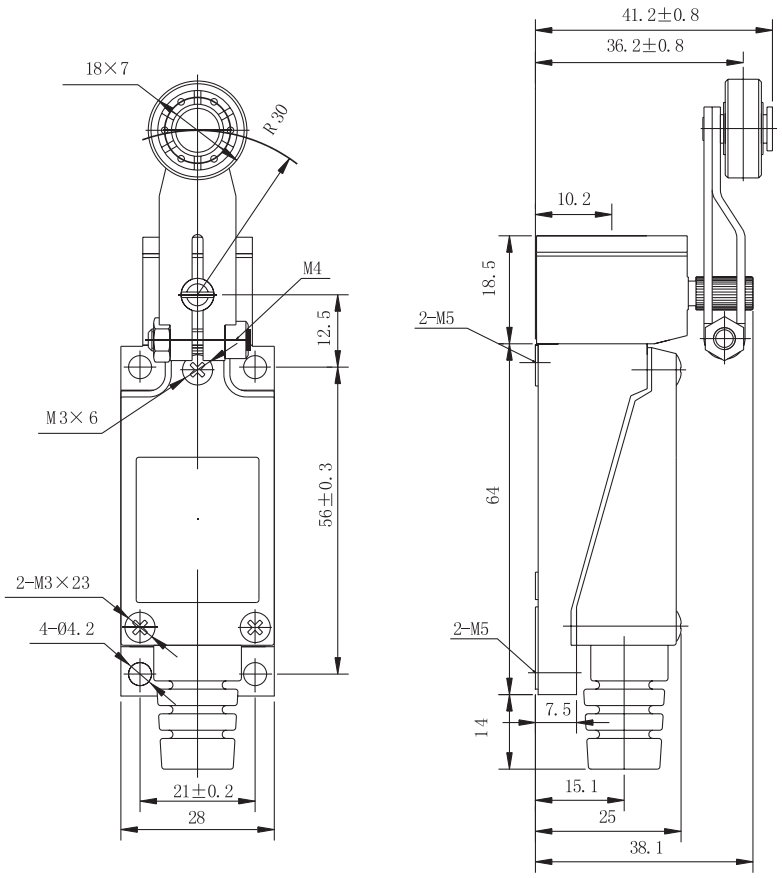

ME-8104

ME Series Limit Switch

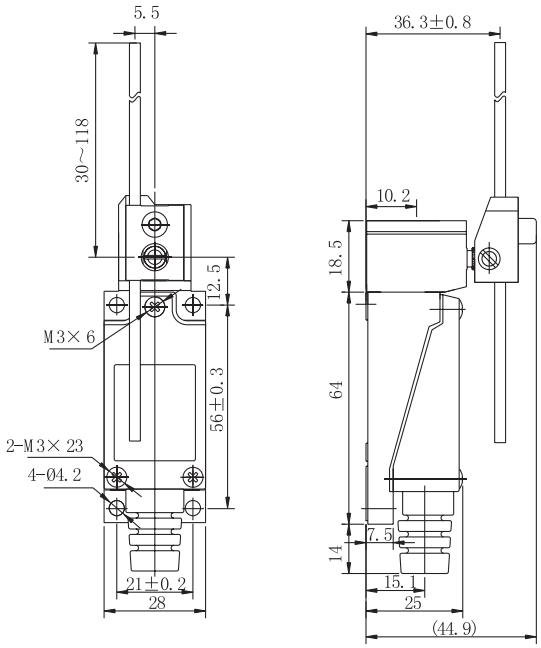

ME-8107

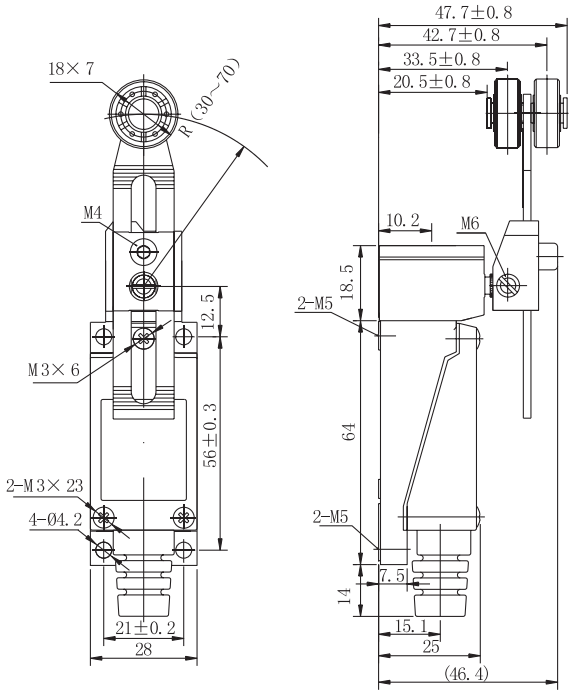

ME-8108

ME Series Limit Switch

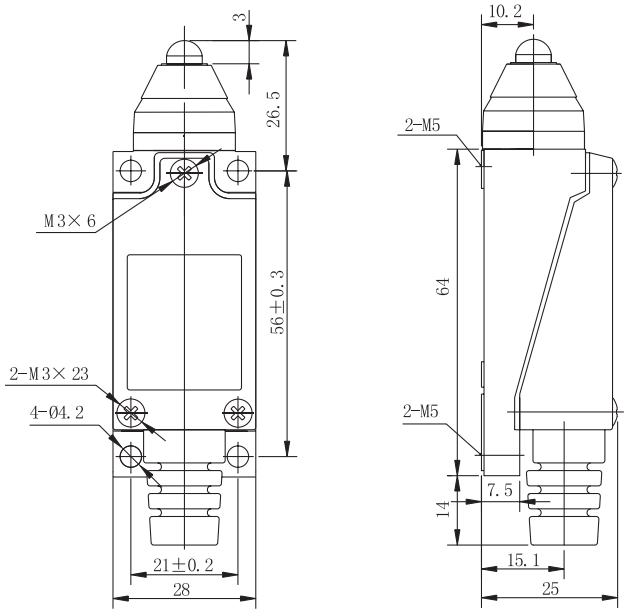

ME–8111

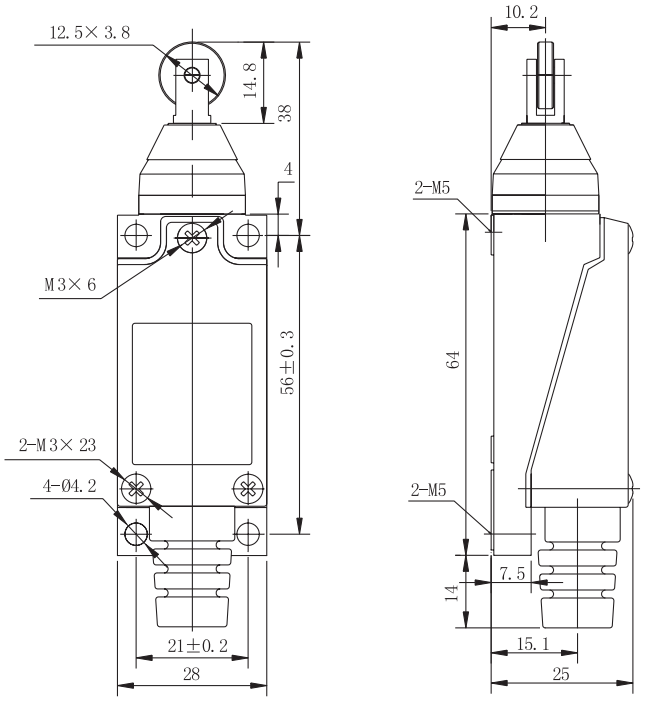

ME–8112

ME Series Limit Switch

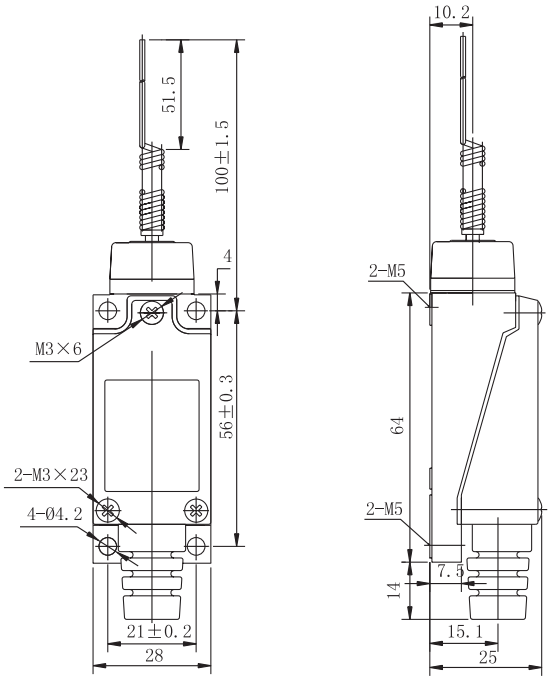

ME-8169

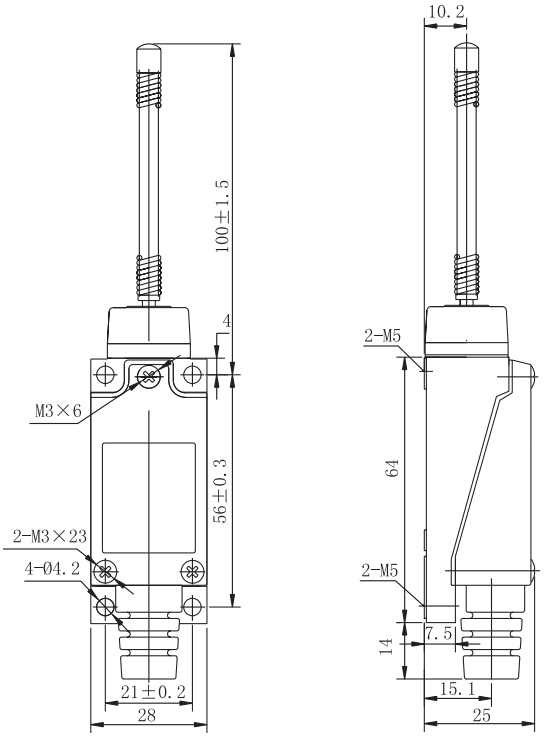

ME-9101

ME Series Limit Switch

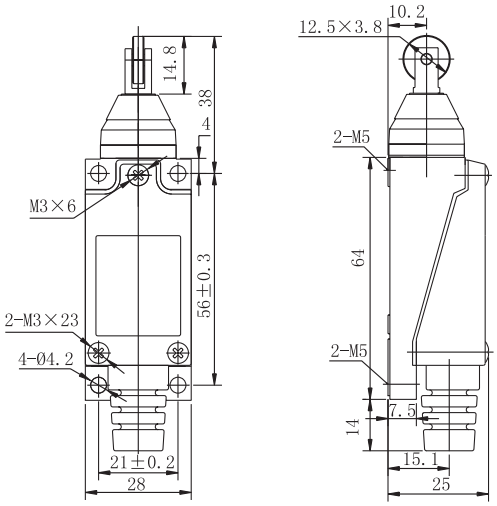

ME-8122

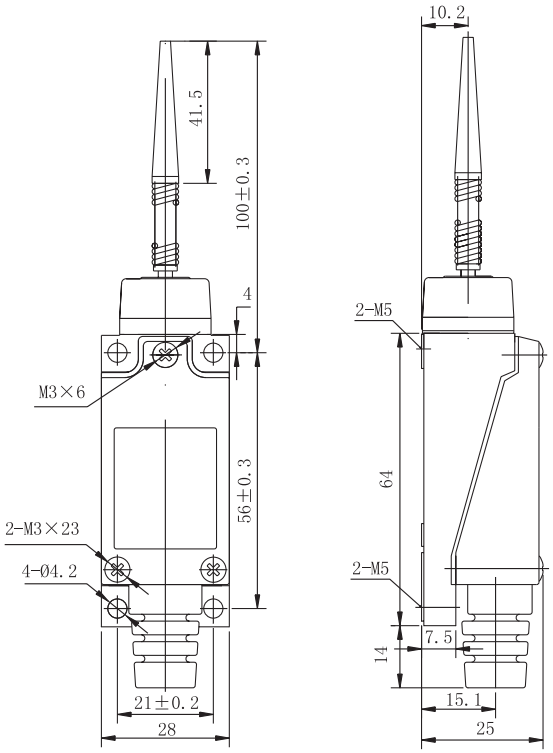

ME-8166

6 Ordering Notice

Please specify the following items when ordering the product from our company:

a.Product model and name

b.Order quantity.

D

INSTRUMENTS & METERS

D001-D027

INSTRUMENT & METERS

Analogue Panel Meters

Digital Meters

Electronic Meters

Smart Meters

Prepayment Meters

Analogue Panel Meters

Analogue Panel Meter
Page 001

44, 59 Series Analogue Panel Meter
Page 006

99T1 Series Analogue Panel Meter
Page 004

69, 85 Series Analogue Panel Meter
Page 007

42, 6 Series Analogue Panel Meter
Page 005

Digital Meters

P2565 Series Digital Meter
Page 009

PA(V)256 Series Single/Three Phase Digital Ammeter(Volt-meter) Meter
Page 013

PD(Z)2565L3 Series Three-phase Multi-function (Combination) Meter
Page 010

P2566 Series Programmable Digital Meter
Page 016

P256 Series Digital Meter
Page 012

PA(V)2566 Series Programmable Digital Ammeter (Voltmeter)
Page 019

Electronic Meters

DDS686 Series
Electronic Meter

Page 021

DTS256 Series
Electronic Meter

Page 022

Smart Meters

DTZY256, DDZY256
Series Smart Meter

Page 025

Prepayment Meters

DTSY256 Series
Prepayment Meter

Page 027

Analogue Panel Meter

1 Overview

Analogue Panel Meters is widely used in direct simulation of the indication of electrical measurement meter and suitable for measurement of AC circuit and DC circuit: electrical parameters such as current, voltage, frequency, power and power factor. The pointer meter has advantages of displaying the change trends of the measured electrical parameters; the meter is mainly used in various electrical control devices in industry and mining, metallurgy, chemical, power, and complete set of equipment, featuring with convenient installation, clear scale, and artistic appearance.

2 Type designation

□ □— □—□

- □ — Model
- □ — L: AC rectifier type; T: AC electromagnetic type; C: DC
- □ — Design code
- □ — A: Ammeter; V: Voltmeter; H: Frequency meter; S: Power factor meter; W: Active power meter; R: Reactive power meter

3 Technical parameters

Technical parameters	Technical standards
Installation	Unless otherwise specified, vertically-mounted, allowable inclination angle: ±5°.
Damping time	<4s
Working environment	Allowable working environment temperature limit: -25℃~+40℃; relative atmosphere humidity: 25%~80%; no dust or corrosive gas in air.
Insulation strength	Voltage withstand test under the sine wave AC 2kV voltage at 50Hz frequency for 1 minute
Insulation resistance	A DC voltage 500V is applied between the housing and the wiring terminal of meter, and the insulation resistance is not below 5MΩ.
Storage temperature	-40℃~+55℃

Analogue Panel Meter

4 Application

For meters not listed in the specifications, please contact us for special supply.
For overload ammeter, the overload multiples can be customized as 1, 2, 3, 4, and 5 by user.

5 Index of active power meter

(Table 1)

Connected via the current transformer (secondary current 5A)	Measurement range	Rated voltage (V)										
		Directly connected			Connected via the voltage transformer (secondary voltage 100V)							
		100	220	380	3k	6k	10k	15k	35k	110k	220k	380k
5	W	0. 8k	2k	3k	25k	50k	80k	120k	300k	1M	2M	3M
7. 5	W	1. 2k	3k	5k	40k	80k	120k	200k	500k	1. 5M	3M	5M
10	W	1. 5k	4k	6k	50k	100k	150k	250k	600k	2M	4M	6M
15	W	2. 5k	6k	10k	80k	150k	250k	400k	1M	3M	6M	10M
20	W	3k	8k	12k	100k	200k	300k	500k	1. 2M	4M	8M	12M
30	W	5k	12k	20k	150k	300k	500k	800k	2M	6M	12M	20M
40	W	6k	15k	25k	200k	400k	600k	1M	2. 5M	8M	15M	25M
50	W	8k	20k	30k	300k	500k	800k	1. 2M	3M	10M	20M	30M
75	W	12k	30k	50k	400k	800k	1. 2M	2M	5M	15M	30M	50M
100	W	15k	40k	60k	500k	1M	1. 5M	2. 5M	6M	20M	40M	60M
150	W	25k	60k	100k	800k	1. 5M	2. 5M	4M	10M	30M	60M	100M
200	W	30k	80k	120k	1M	2M	3M	5M	12M	40M	80M	120M
300	W	50k	120k	200k	1. 5M	3M	5M	8M	20M	60M	120M	200M
400	W	60k	150k	250k	2M	4M	6M	10M	25M	80M	150M	250M
600	W	100k	250k	400k	3M	6M	10M	15M	40M	120M	250M	400M
750	W	120k	300k	500k	4M	8M	12M	20M	50M	150M	300M	500M
800	W	120k	300k	500k	4M	8M	15M	20M	50M	150M	300M	500M
1k	W	150k	400k	600k	5M	10M	25M	25M	60M	200M	400M	600M
1. 5k	W	250k	600k	1M	8M	15M	25M	40M	100M	300M	600M	1000M
2k	W	300k	800k	1. 2M	10M	20M	30M	50M	120M	400M	800M	1200M
3k	W	500k	1. 2M	2M	15M	30M	50M	80M	200M	600M	1200M	2000M
4k	W	600k	1. 5M	2. 5M	20M	40M	60M	100M	250M	800M	1500M	2500M
5k	W	800k	2M	3M	25M	50M	80M	120M	300M	1000M	2000M	3000M
6k	W	1M	2. 5M	4M	30M	60M	100M	150M	400M	1200M	2500M	4000M
7. 5k	W	1. 2M	3M	5M	40M	80M	120M	200M	500M	1500M	3000M	5000M
10k	W	1. 5M	4M	6M	50M	100M	150M	250M	600M	2000M	3500M	6000M

Analogue Panel Meter

6 Index of reactive power meter

(Table 2)

Connected via the current transformer (secondary current 5A)	Measurement range	Rated voltage (V)										
		Directly connected			Connected via the voltage transformer (secondary voltage 100V)							
		100	220	380	3k	6k	10k	15k	35k	110k	220k	380k
5	W	0. 6k	1. 5k	2. 5k	20k	40k	60k	100k	250k	800k	1. 5M	2. 5M
7. 5	W	1k	2. 5k	4k	30k	60k	100k	150k	400k	1. 2M	5M	4M
10	W	1. 2k	3k	5k	40k	80k	120k	200k	500k	1. 5M	3M	5M
15	W	2k	5k	8k	60k	120k	200k	300k	800k	2. 5M	5M	8M
20	W	2. 5k	6k	10k	80k	150k	250k	400k	1M	3M	6M	10M
30	W	4k	10k	15k	120k	250k	400k	600k	1. 5M	5M	10M	15M
40	W	5k	12k	20k	150k	300k	500k	800k	2M	6M	12M	20M
50	W	6k	15k	25k	200k	400k	600k	M1	2. 5M	8M	15M	25M
75	W	10k	25k	40k	300k	600k	1M	1. 5M	4M	12M	25M	40M
100	W	12k	30k	50k	400k	800k	1. 2M	2M	5M	15M	30M	50M
150	W	20k	50k	80k	600k	1. 2M	2M	2. 5M	8M	25M	50M	80M
200	W	25k	60k	100k	800k	1. 5M	2. 5M	4M	10M	30M	60M	100M
300	W	40k	100k	150k	1. 2M	2. 5M	4M	10M	15M	50M	100M	150M
400	W	50k	120k	200k	1. 5M	3M	5M	8M	20M	60M	120M	200M
600	W	80k	200k	300k	2. 5M	5M	8M	10M	30M	100M	200M	300M
750	W	100k	250k	400k	3M	6M	10M	15M	40M	120M	250M	400M
800	W	100k	250k	400k	3M	6M	10M	20M	40M	120M	250M	400M
1k	W	120k	300k	500k	4M	8M	12M	30M	50M	150M	300M	500M
1. 5k	W	200k	500k	800k	6M	12M	20M	40M	80M	250M	500M	800M
2k	W	250k	600k	1M	8M	15M	25M	40M	150M	500M	1000M	1500M
3k	W	400k	1M	1. 5M	12M	25M	40M	50M	150M	500M	1000M	1500M
4k	W	500k	1. 2M	2M	15M	30M	50M	80M	200M	600M	1200M	2000M
5k	W	600k	1. 5M	2. 5M	20M	40M	60M	100M	250M	800M	1500M	2500M
6k	W	800k	2M	3M	25M	50M	80M	120M	300M	1000M	2000M	3000M
7. 5k	W	1M	2. 5M	4M	30M	60M	100M	150M	400M	1200M	2500M	4000M
10k	W	1. 2M	3M	5M	40M	80M	120M	200M	500M	1500M	3000M	5000M

99T1 Series Analogue Panel Meter

1 Overview

99T1 series meter is of the electromagnetic type or magnetic-electric type, and uses a repulsive structure. The meter consists of a measuring mechanical and an indication device. The housing is made of ABS engineering plastic with good insulation and wide visual field, and the values can be easily read.

2 Technical parameters

Product name	Spec.	Measurement range	Accuracy grade
AC ammeter	99T1-A	1A-30A (directly connected) 5A-10kA/5A/1A (external device)	Grade 2.5
AC voltmeter	99T1-V	15V-600V (directly connected) 380V-450kV/100V (external device)	Grade 2.5

3 Outline and installation dimension

99T1-A 99T1-V type meter

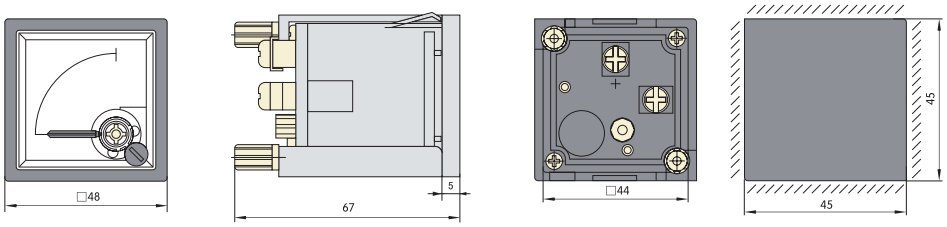

42, 6 Series Analogue Panel Meter

1 Overview

42, 6 series meter consists of a measuring line, a measuring mechanism, and an indicator device. The magneto-electricity system magnetic structure is used. With ABS engineering plastic housing, printed scale panel and transparent glass cover used, the entire structure is elegant and artistic with open view.

2 Technical parameters

Product name	Spec.	Measurement range	Accuracy grade
DC ammeter	6C2-A 42C3-A	50μA-20A (direct connection) 20A-10kA/75mV/60mV (external device)	Grade 1.5
DC voltmeter	6C2-V 42C3-V	50V-600V (direct connection) 450V-450kV/1mA/5mA (external device)	Grade 1.5
AC ammeter	6L2-A 42L6-A	500mA-50A (direct connection) 5A-10kA/5A/1A (external device)	Grade 1.5
AC voltmeter	6L2-V 42L6-V	15V-1200V (direct connection) 380V-450kV/100V (external device)	Grade 1.5
Frequency meter	6L2-H 42L6-H	45-55Hz, 45-65Hz, 55-65Hz Equivalent rated voltage 100V 200V 380V	Grade 2.5
Active power meter and reactive power meter	6L2-W/var 42L6-W/var	5A-10kA/5A(external device) 100V, 220V, 380V-380kV/100V	Grade 2.5
Power factor meter	42L6-S COSΦ 6L2-S COSΦ	0.5C-1-0.5L 100V 5A 380V 5A	Grade 2.5

3 Outline and installation dimension

42L6, 42C3 meter

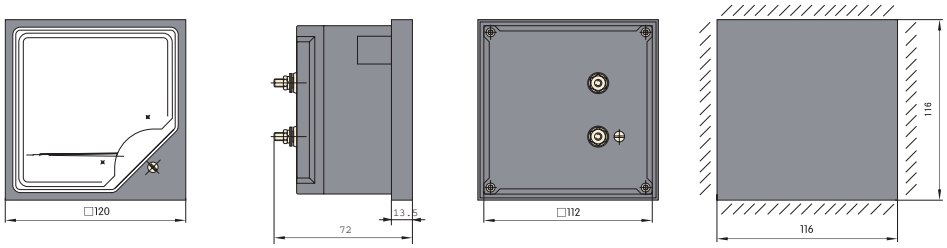

6L2, 6C2 meter

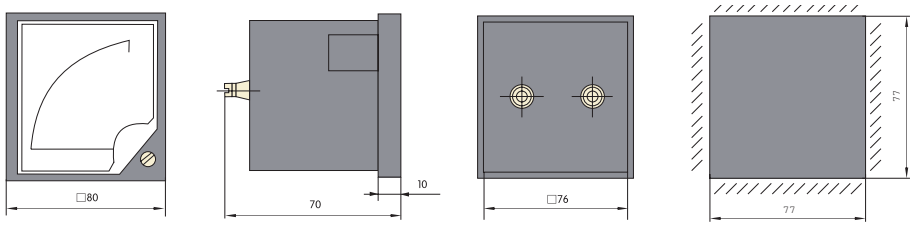

44, 59 series Analogue Panel Meter

1 Overview

44 and 59 series meter consist of a measuring line, a measuring mechanism and an indicating device. The internal magnetic structure in the magnetic-electric system is used. The plastic housing, full-transparent organic glass window and printed scale panel are used to provide an artistic and elegant entire appearance with wide open view.

2 Technical parameters

Product name	Spec.	Measurement range	Accuracy grade
DC ammeter	59C2-A 44C2-A	50μA-20A (direct connection) 20A-10kA/75mV/60mV (external device)	Grade 1.5
DC voltmeter	59C2-V 44C2-V	50V-600V (direct connection) 450V-450kV/1mA/5mA (external device)	Grade 1.5
AC ammeter	59L1-A 44L1-A	500mA-30A (direct connection) 5A-10kA/5A/1A (external device)	Grade 1.5
AC voltmeter	59L1-V 44L1-V	15V-600V (direct connection) 380V-450kV/100V (external device)	Grade 1.5
Frequency meter	59L1-H 44L1-H	45-55Hz, 45-65Hz, 55-65Hz Equivalent rated voltage 100V 200V 380V	Grade 2.5

3 Outline and installation dimension

44L1, 44C2 meter

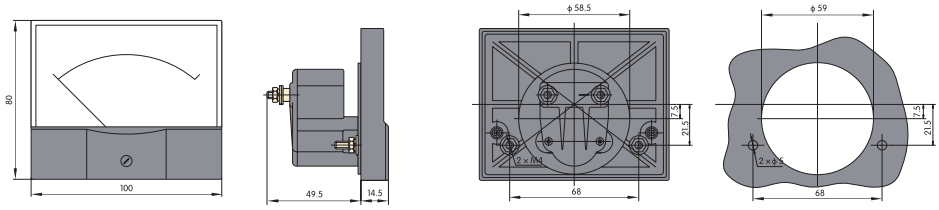

59L1, 59C2 meter

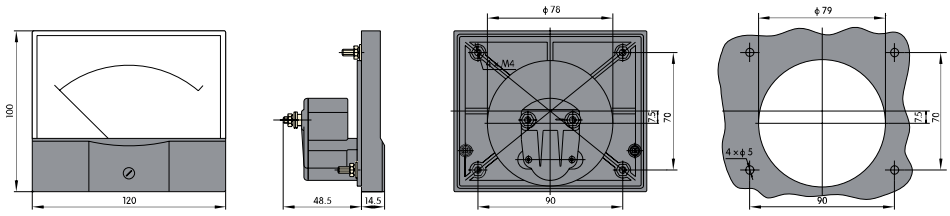

85, 69 Series Analogue Panel Meter

1 Overview

85 and 69 series meters consist of a measuring line, a measuring mechanism and an indicator device. The magneto-electricity system magnetic structure is used. With plastic housing, full-transparent organic glass window, and printed scale panel used, the entire structure is elegant and artistic with wide open view.

2 Technical parameters

Product name	Spec.	Measurement range	Accuracy grade
DC ammeter	85C1-A 69C9-A 85C17-A 69C17-A	50μA-20A (direct connection) 20A-10kA/75mV/60mV (external device)	Grade 2.5
DC voltmeter	85C1-V 69C9-V 85C17-V 69C17-V	50V-600V (direct connection) 450V-450kV/1mA/5mA (external device)	Grade 2.5
AC ammeter	69L9-A 69L17-A 85L1-A 85L17-A	500mA-30A (direct connection) 5A-10kA/5A/1A (external device)	Grade 2.5
AC voltmeter	69L9-V 69L17-V 85L1-V 85L17-V	15V-600V (direct connection) 380V-450kV/100V (external device)	Grade 2.5
Frequency meter	85L1-H 69L9-H	45-55Hz, 45-65Hz, 55-65Hz Equivalent rated voltage 100V 200V 380V	Grade 2.5

3 Outline and installation dimension

85L1, 85C1 series meter

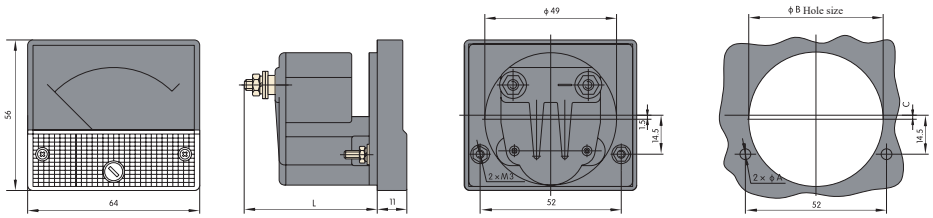

Product model	Spec.	L	A	B	C
85L1-A/V	Current ≥25A	51.5	3.5	53.5	0
	Current < 25A, available for all voltages	49.5	4	50	1.5

69, 85 Series Analogue Panel Meter

69L9, 69C9 series meter

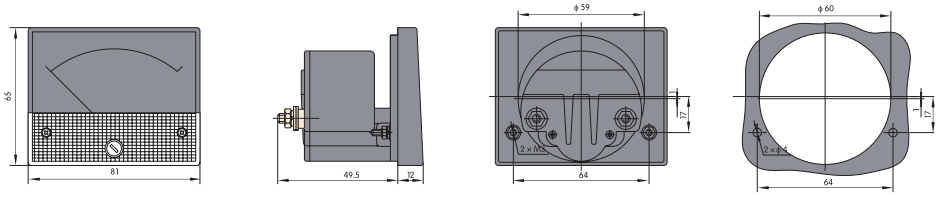

85L17, 85C17 series meter

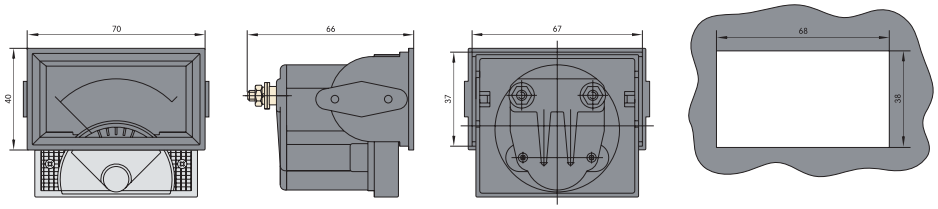

69L17, 69C17 series meter

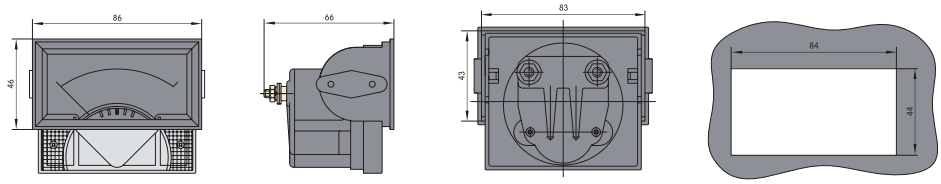

P2565 Series Digital Meter

1 Overview

With large-scale integrated circuit, digital sampling processing technology, and SMT process, P2565 series Digital Meter is designed and manufactured to satisfy the monitoring needs in power systems, industrial and mining enterprises, public facilities, intelligent buildings, and intelligent communities. It can measure all common power parameters with high precision, such as three-phase voltage, three-phase current, active power, reactive power, frequency, power factor, active energy, and reactive energy. High-speed RS485 communication interface is optional, and the Modbus protocol and DL/T 645-2007 protocol are supported; there are four programming keys on the instrument panel to easily realize display switching and instrument parameter programming settings on site with strong flexibility.
The meter has a very high performance-price ratio, and can directly replace conventional power transmitters, measurement and indication instruments, energy metering instruments and related auxiliary units.

2 Type Designation

P □ 2565 □ - □ □ - □

- Expansion function code
  T: RS485 Communication
- Display mode code
  S: Digital tube, Y: LCD
- Outline dimension code (including panel size)
  48: Square (48mm*48mm)
  72: Square (72mm*72mm)
  80: Square(80mm*80mm)
  96: Square(96mm*96mm)
- Input signal category
  L1: Single-phase AC signal L3: Three-phase AC signal
- Product series code
- Instrument type
  Z: Combination meter (frequency, power factor, power)
  D: Multifunctional
  A: Ammeter V: Voltmeter
- Installed Digital Meter series product code

3 Product Functions and Its Features

3.1 Normal working conditions: Rated working voltage 400V and below, frequency 45Hz~65Hz.

3.2 Installation and operation conditions: storage and working temperature: -25℃ ~ +55℃, relative humidity≤93%RH, no condensation, no corrosive gas, altitude < 2500m, without severe shaking, impact, and vibration.

3.3 Installation method: embedded installation method, drill the hole on the installation panel according to the outline dimensions of the instrument; when the instrument is built into the mounting hole, insert the clamps into the diagonal slot of the instrument, and push it firmly by hands.

PD(Z)2565L3 Series Three-Phase Multifunction (Combined) Meter

1 Overview

With large-scale integrated circuit, digital sampling processing technology, and SMT process, PD(Z)2565L3 series three-phase multifunctional (combined) meter is designed and manufactured to satisfy the monitoring needs in power systems, industrial and mining enterprises, public facilities, intelligent buildings, and intelligent communities. It can measure all common power parameters with high precision, such as three-phase voltage, three-phase current, active power, reactive power, frequency, power factor, active energy, and reactive energy (combined meter cannot measure the electric energy parameters); the series has a short housing with up to one-circuit RS485 communication function and one-circuit switching output function; there are four programming keys on the instrument panel to easily realize display switching and instrument parameter programming settings on site with strong flexibility.

2 Product Parameters

Technical parameter			Technical indicator
Input	Voltage	Rated value	AC 400V
		Overload	Duration: 1.2 times; instantaneous: 2 times / 5s
		Power consumption	<2VA
	Current	Rated value	AC 5A
		Overload	Duration: 1.2 times; instantaneous: 10 times / 5s
		Power consumption	<1VA
	Frequency		45Hz~65Hz
Measurement accuracy	Current		Grade 0.5
	Voltage		Grade 0.5
	Frequency		±0.05Hz
	Power		Active power, grade 0.5 Reactive power, grade 1.0
	Electric energy		Active power, grade 0.5 Reactive power, grade 2.0
Output function	Alarm output		The upper and lower limit alarms are output from the same relay, contact capacity AC250V/2A, DC30V/2A
	Communication		RS485 communication interface, supporting both Modbus-RTU and DL/T 645-2007 dual protocols, baud rates 1200, 2400, 4800, 9600, 19200 optional
	Display mode		LCD/LED
Aux. power supply	Range		AC、DC85V ～ 265V，50Hz/60Hz
	Power consumption		＜ 5VA
Safety	Power frequency withstand voltage	Input and aux. power supply	>2.5kV 50Hz/1min
		Input and output	
		Output and aux. power supply	
	Insulation resistance		Aux. power support, input, and output to the meter housing is > 100MΩ
Electromagnetic compatibility	Electrostatic discharge immunity		GB/T 17626.2 Grade 4
	Quick transient pulse train immunity		GB/T 17626.4 Grade 4
	Surge (impact) immunity		GB/T 17626.5 Grade 4
	High-frequency electromagnetic field		80MHz~1000MHz, 10V/m
Ambinet temp.	Temperature		Storage and operation: -25℃~55℃
	Humidity		≤ 93%RH, non-condensation, and no corrosive gas
	Altitude		≤2500m

PD(Z)2565L3 Series Three-Phase Multifunction (Combined) Meter

3 Outline and Installation Dimensions

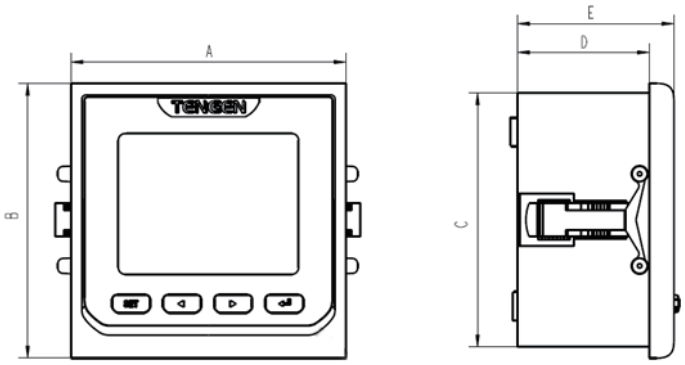

Model	A	B	C	D	E	Hole sizes (W x H)
PD/Z2565L3-72S(Y)	72mm	72mm	65mm	38.4mm	45.5mm	66mm×66mm
PD/Z2565L3-80S(Y)	80mm	80mm	74mm	38.4mm	45.5mm	75mm×75mm
PD/Z2565L3-96S(Y)	96mm	96mm	89mm	38.4mm	46.5mm	90mm×90mm

Note: The PD (Z) 2565L3 series does not have square size models of 48mm and 120mm.

4 Wiring Diagram

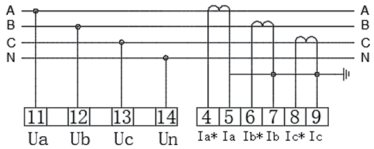

Three-phase four-wire current transformer connected

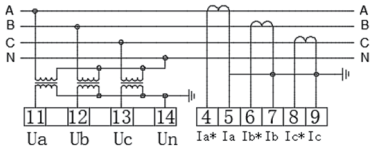

Three-phase four-wire voltage transformer connected

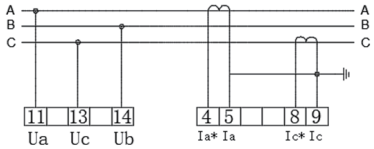

Three-phase four-wire current transformer directly connected

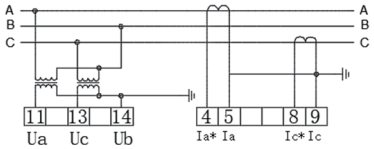

Three-phase four-wire voltage transformer directly connected

5 Precautions

5.1 Before power-on, please confirm that the power supply and input signal of the instrument are within the scope of application again, and that each terminal is connected properly and firmly.

5.2 The meter shall be warmed up for 15 minutes to ensure accurate measurement.

5.3 The meter shall not be subject to knocks, collisions, and violent vibrations, and the working environment should meet the technical requirements.

5.4 For poor quality of the meter including damage occurred during transportation (excluding unpacking without permission), please contact the company or local dealers directly, and our company will quickly replace it free of charge.

6 Ordering Notice

6.1 Please specify the model, specification, quantity, auxiliary power supply, and structural form when selecting the instrument.

6.2 When RS485 communication function and switching output function are required, please clearly specify the specification according to the Type Designation or remark the model when ordering, because the routine product generally has no above functions.

P256 Series Digital Meter

1 Overview

The P256 series programmable installed Digital Meters are manufactured in a modular manner using the SMT process to realize the functional configuration through output modules and instrument keypads. This series instrument can be used as a general Digital Meter, or can be as a multi-functional network power meter integrating measurement, alarm, switching input, switching output, loosening, and communication by installing different output modules. It is widely used in the electric power, factories and mining enterprises and equipment manufacturing fields.

2 Type Designation

P □ 256 □ - □ □ - □

- Expansion function code
  T: RS485 Communication DI: Switching input
  DO: Switching output AO: Analog transmission
  Note: By default: no this expansion function is available for this instrument; Arabic numbers in the front of the code means the number of circuits; for example, two-circuit relay output is indicated by "2DO".
- Display mode code
  S: Code tube, Y: LCD
- Outline dimension code (including panel size)
  48: Square (48mm*48mm) 72: Square (72mm*72mm)
  80: Square(80mm*80mm) 96: Square(96mm*96mm)
  120: Square (120mm*120mm)
- Input signal category
  L1: Single-phase AC signal L3: Three-phase AC signal
- Product series code
- Instrument type
  A: Ammeter V: Voltmeter Z: Combination meter (frequency, power factor)
  D: Multifunctional
- Installed Digital Meter series product code

3 Product Functions and Its Features

3.1 Normal working conditions: Rated working voltage 690V and below, frequency 45Hz~65Hz.

3.2 Installation and operation conditions: storage and working temperature: -25℃ ~ +55℃, relative humidity≤93%RH, no condensation, no corrosive gas, altitude < 2500m, without severe shaking, impact, and vibration.

3.3 Installation method: embedded installation method, drill the hole on the installation panel according to the outline dimensions of the instrument; when the instrument is built into the mounting hole, insert the clamps into the diagonal slot of the instrument, and push it firmly by hands.

4 Outline and Installation Dimensions

Model	A	B	C	D	E	Hole size (W x H)	Remarks
PA/V256 48S	48mm	48mm	45mm	65mm	72mm	46mm×46mm	Suitable for single phase instrument
PA/V256-72S	72mm	72mm	65mm	76mm	83.5mm	66mm×66mm	
PA/V256-80S	80mm	80mm	74mm	76mm	83.5mm	75mm×75mm	
PA/V256-96S	96mm	96mm	89mm	76mm	84.5mm	90mm×90mm	
PA/V256-120S	120mm	120mm	110mm	76mm	84.5mm	111mm×111mm	Suitable for single phase instrument

PA(V)256 Series Single-Phase and Three-Phase Digital Display Ammeter (Voltmeter)

1 Overview

PA/V256 series single-phase and three-phase digital display ammeter and voltmeter (hereinafter referred to as the instrument) is a new generation of programmable intelligent instrument, and is widely used in various intelligent power distribution systems such as power monitoring, industrial automation, and switchgear. The instrument is primarily used for the real-time measurement and display of the voltage, current and frequency of the power line, integrating with communication, alarm, analog transmission and switching input, and has advantages of high measurement accuracy, good linearity, long-term operation without adjustment, programmable setting parameters. The product follows the development trend of digitalization, modularization and networking of installed digital display electrical measuring instrument with high cost-performance and simple and practical function combination.

2 Product Parameters

Technical parameter			Technical indicator
Input	Voltage	Rated value	AC 100V、400V、 690V
		Overload	Duration: 1.2 times; instantaneous: 2 times / 5s When out of 2 times rated value, the "HHH" overload mark will display
		Power consumption	<1VA (per phase)
	Current	Rated value	AC 1A, 5A
		Overload	Duration: 1.2 times ; instantaneous: 10 times / 5s When out of 2 times rated value, the "HHH" overload mark will display
		Power consumption	<1VA (per phase)
	Frequency		45Hz~65Hz
Measurement accuracy	Current		Grade 0.5
	Voltage		Grade 0.5
Input function	Switching input		Support 2-circuit passive dry contact input, optocoupler isolation
Output function	Alarm output		The upper and lower limit alarms are output from the same relay, with contact capacity AC250V/2A, DC30V/2A
	Analog transmission output		Output spec. 0 ~ 20mA, 4 ~ 20mA optional, grade 0.5, output load ≤ 500Ω
	Communication		RS485 communication interface, supporting both Modbus-RTU and DL/T 645-2007 dual protocols, baud rates 1200, 2400, 4800, 9600, 19200 optional
	Display mode		LED digital tube display, the highest resolution is voltmeter 0.1V, ammeter 0.001A, units are automatically switched and decimal points are automatically shifted
	Display range		Voltmeter: AC 0 ~ 9999kV Ammeter: AC 0 ~ 999.9kA
Aux. power supply	Range		AC, DC85V ~ 265V or AC220V, 50Hz/60Hz
	Power consumption		<15VA
Safety	Power frequency withstand voltage	Input and aux. power supply	> 2kV 50Hz/1min
		Input and output	
		Output and aux. power supply	
	Insulation resistance		Aux. power support, input, and output to the meter housing is > 100MΩ
Electromagnetic compatibility	Electrostatic discharge immunity		GB/T 17626.2 Grade 4
	Quick transient pulse train immunity		GB/T 17626.4 Grade 4
	Surge (impact) immunity		GB/T 17626.5 Grade 4
	High-frequency electromagnetic field		80MHz ~ 1000MHz, 10V/m
Ambinet temp.	Temperature		Storage and operation: -25℃ ~ 55℃
	Humidity		≤ 93%RH, non-condensation, and no corrosive gas
	Altitude		≤ 2500m

Note: Single-phase meter does not support switching input and analog transmission output functions.

PA(V)256 Series Single-Phase and Three-Phase Digital Display Ammeter (Voltmeter)

3 Outline and Installation Dimensions

Model	A	B	C	D	E	Hole size (W x H)	Remarks
PA/V256 48S	48mm	48mm	45mm	65mm	72mm	46mm×46mm	Suitable for single phase instrument
PA/V256-72S	72mm	72mm	65mm	76mm	83.5mm	66mm×66mm	
PA/V256-80S	80mm	80mm	74mm	76mm	83.5mm	75mm×75mm	
PA/V256-96S	96mm	96mm	89mm	76mm	84.5mm	90mm×90mm	
PA/V256-120S	120mm	120mm	110mm	76mm	84.5mm	111mm×111mm	Suitable for single phase instrument

4 Wiring Diagram

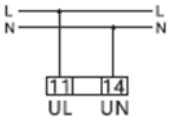

Single-phase voltage directly connected

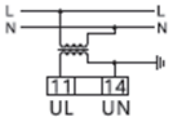

Single-phase voltage connected through the transformer

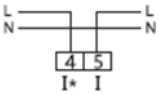

Single-phase current directly connected

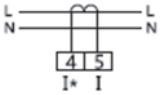

Single-phase current connected through the transformer

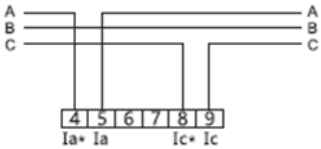

Three-phase three-wire current directly connected

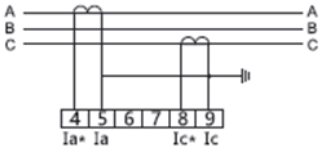

Three-phase three-wire current connected through the transformer

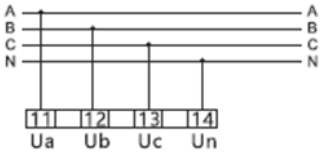

Three-phase three-wire current directly connected

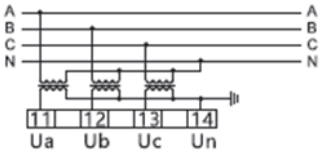

Three-phase three-wire current connected through the transformer

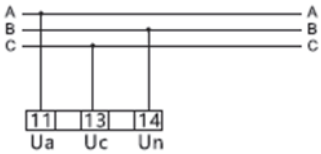

Three-phase three-wire current directly connected

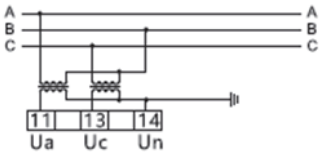

Three-phase three-wire current connected through the transformer

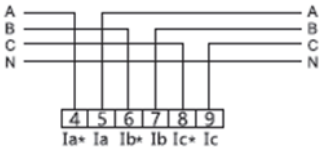

Three-phase three-wire current directly connected

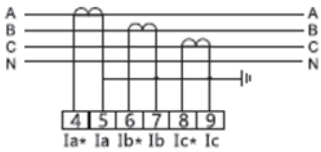

Three-phase three-wire current connected through the transformer

PA(V)256 Series Single-Phase and Three-Phase Digital Display Ammeter (Voltmeter)

5 Precautions

5.1 Before power-on, please confirm that the power supply and input signal of the instrument are within the scope of application again, and that each terminal is connected properly and firmly.

5.2 The meter shall be warmed up for 15 minutes to ensure accurate measurement.

5.3 The meter shall not be subject to knocks, collisions, and violent vibrations, and the working environment should meet the technical requirements.

5.4 The warranty period of the instrument is 24 months. For poor quality of the meter including damage occurred during transportation (excluding unpacking without permission), please contact the company or local dealers directly, and our company will quickly replace it free of charge.

6 Ordering Notice

6.1 Please specify the model, specification, quantity, auxiliary power supply, and structural form when selecting the instrument.

6.2 When RS485 communication function, switching input function, switching output function, and transmitter output function are required, please clearly specify them when ordering. The conventional product has no above functions (multifunctional meter has RS485).

P2566 Series Programmable Digital Meter

1 Overview

P2566 series digital panel meters is designed and manufactured with SMT process in the modular way to realize the function configuration of output module and meter keyboard. This series of meter can be used as the general digital display device. With different output modules used, this meter can become multi-functional network power meter with functions such as measurement, alarm, switching input, switching output, transmission and communication, widely used in various fields such as power, industrial and mining enterprises and equipment manufacturing.

2 Type designation

P □ □ □ - □ × □ - □ - □

- □ (last): Meter range, input specification, change information
- □ (after the second dash): Combination: only for combined meter
  3A: three-current 3V: three-voltage
  VAP: voltage, current, and active power
  VAF: voltage, current, and frequency
- □ (after the first dash): Display method:
  1: Displayed by single-row nixie tube
  4: Displayed by three-row nixie tube
  Y: LED display
- × : Output way:
  X: Display meter, no function output;
  K: Relay contact output
  B: Analog transmitter output
  D: Analog transmitter + RS485 communication output
  R: Relay contact + Analog transmitter output T; RS485 communication output
  S: Relay contact + RS485 communication output
  N: Relay contact + Analog transmitter + RS485 communication output
- □ (before the dash): Meter shape:
  1: 16 grooved type (160*80)
  2: 42 square type (120*120)
  3: 6 square type (80*80)
  4: 46 grooved type (120*60)
  5: 96*48 grooved type
  7: 72*72 square type
  8: 48*48 square type
  9: 96*96 square type
- □ (fourth): Signal input way:
  L: AC signal input M: pulse signal input S: three-phase four-wire input C: DC signal input Y: three-phase three-wire input
- □ (third): Product series:
  2566: Programmable mounted digital panel meter
- □ (second): Meter type:
  A: Ammeter
  V: Voltmeter
  Z: Combined meter
  D: Multi-function meter
- P (first): Mounted digital display panel meter

P2566 Series Programmable Digital Meter

3 Product functions and features

3.1 Working environment: Used in an environment with temperature ranged -25°C to +55°Cand with humidity ≤90% without corrosive gas;

3.2 Installation way: Vertically mounted.

4 Outline and installation dimension

P2566-1 series

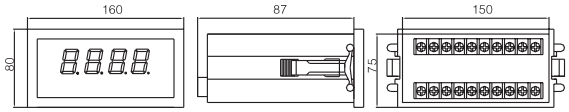

P2566-2 series

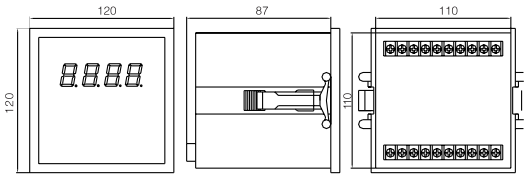

P2566-3 series

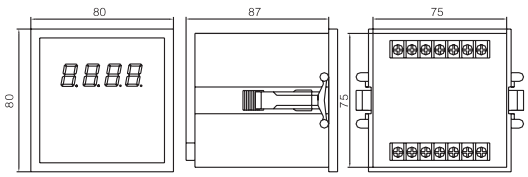

P2566-4 series

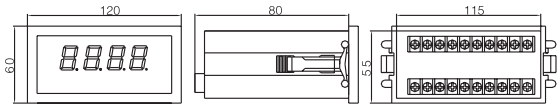

P2566-5 series

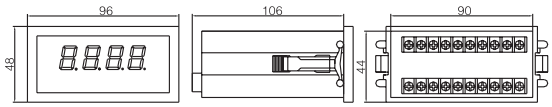

P2566-7 series

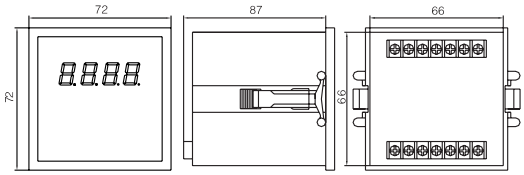

P2566 Series Programmable Digital Meter

P2566-8 series

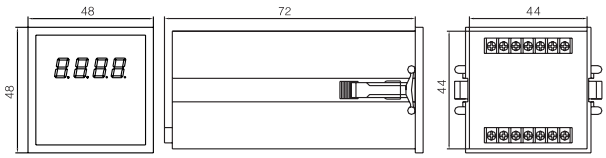

P2566-9 series

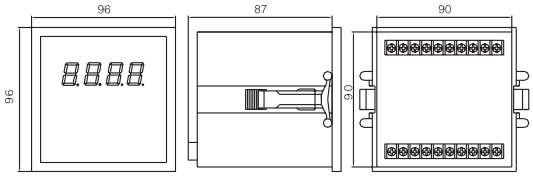

5 Installation dimension and hole size

Unit:mm

Meter shape	Frame size		Housing size			Mounting hole size		Value
	Width	Height	Width	Height	Depth	Width	Height	Code
16 grooved type	160	80	150	75	87	152	76	1
42 square type	120	120	110	110	87	112	112	2
6 square type	80	80	75	75	87	76	76	3
46 grooved type	120	60	115	55	80	116	56	4
72x72 square type	72	72	67	67	87	68	68	7
48x48 square type	48	48	44	44	72	45	45	8
96x96 grooved type	96	96	90	90	87	92	92	9
96x98 grooved type	96	48	90	44	106	92	45	5

6 Ordering notice

Please specify the product model, specification and quantity before ordering. For special requirements, please contact the manufacturer.

PA(V)2566 Series Programmable Digital Ammeter and Voltmeter

1 Overview

PA(V)2566 series programmable digital display ammeter and voltmeter are primarily used for real-time measurement and indication of the current and voltage in the single-phase power line. The instrument has optional switching output (upper and lower limit alarm) module, analog transmission output module, RS485 digital communication module for users. Through the instrument keyboard, the upper and lower limit alarm value (or range) and alarm switching difference, communication address and communication baud rate, transmission output mode and transmission output range, and digital filter coefficient can be set very conveniently.

2 Product Functions and Features

With high measurement accuracy, good stability, long-term operation without debugging, and parameters setting on site through panel keys.

3 Product Parameters

3.1 Measurement range
AC voltmeter
Direct measurement: AC0-660V
External device: ACO-9999kV (external */100V voltage transformer; the range can be programmed within the measurement range arbitrarily)
DC voltmeter
Direct measurement: DC660V
AC ammeter
Direct measurement: AC0-10A
External device: AC0-9999A (external */5A current transformer; the range can be programmed within the measurement range arbitrarily)
DC ammeter
Direct measurement: DC0~±10A
External device: DC-1999~+9999A (external */75mV shunt; the range can be programmed within the measurement range arbitrarily).
3.2 Measurement accuracy: ±0,5%FS±1 word.
3.3 Sample rate: about 3 times/s.
3.4 Display mode: three rows of four-bit LED digital tube display.
3.5 Display resolution: 1, 0.1, 0.01, and 0.001 can be set freely.
3.6 Voltage input circuit power consumption: <1VA.
3.7 Current input circuit power consumption: <0,5VA.
3.8 Aux. power supply: AC/DC: 85~270V.
3.9 Auxiliary power consumption: <4VA.
3.10 Overflow indication: the character "HHHH" is displayed.
3.11 Transmission output: 0~20mA or 4~20mA can be set freely, with accuracy ± 0.5%FS. Electrical isolation between the signal input and the auxiliary power port.
3.12 Transmission output load resistance: ≤500Q.
3.13 Alarm output: The upper and lower limit alarms are output through the same relay with the contact capacity AC250V/2A, DC30V/2A.
3.14 Communication interface: RS485 serial communication, with MODBUS_RTU communication protocol.
3.15 Working environment: temperature -20℃ ~ 55℃, humidity ≤ 90% RH corrosive occasions.

4 Precautions

4.1 Before power-on, please confirm whether the auxiliary power supply, input signal and wiring are correct;
4.2 The meter shall be warmed up for 15 minutes for accurate measurement;
4.3 The instrument should not be subject to knock, collision and severe vibration, and the working environment should meet the technical requirements;
4.4 The measuring range has been set to be consistent with the specifications provided by the user when ordering when leaving the factory. Users are required to check that the range setting value of the instrument is consistent with the specification of the matched transformer or shunt used by users again. If inconsistent, please re-set the instrument range.

PA(V)2566 Series Programmable Digital Ammeter and Voltmeter

5 Wiring and Terminal Description

18	17	16	15	70	71	72
DO2		DO1		COM	DI1	DI2
Switching output				Switching input		

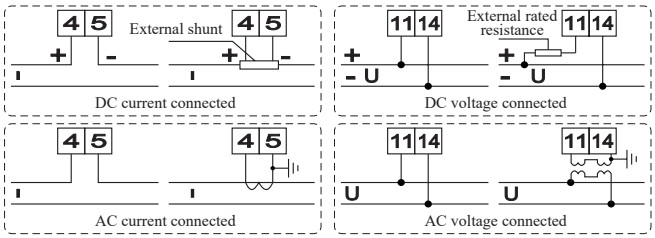

Aux. power	
L	N
1	2

RS485		Voltage signal input	
A	B	UH(+)	UL(-)
58	59	11	14

Current signal input	
I*(+)	I(-)
4	5

6 Ordering Notice

Please specify the product model, specification and quantity when ordering. For special requirements, please contact the manufacturer.

DDS686(QBM11) Series Electronic Meter

1 Overview

DDS686 (QBM11-1):
1.Bidirectional measurement of actice energy
2.LED impulse output for calibration
3.Data reserved over 100 years under power off

2 Technical parameters

Specification		DDS686(QBM11-1)
Standards		IEC 62052-11:003
Accuracy	Active	1.0
voltage	Rated current	127V, 230V
	Range	0.8Un–1.2Un
	Limit	1.7Un-1.3 Un
Frequency		50Hz/60Hz
Current	Range	5(30)A,5(60)A,10(100)A
Starting Current		0.4%lb
Constant	Active	3200,1600,800 imp /KWh
Display	Type	Register
	Digit	5+1,6+0,6+1
Power Consumption	Voltage Circuit	≤1.0W,10VA
	Current Circuit	≤1VA
Communication	lnterface	\
Temperature Condition	Work Temperature	-25℃~+55℃
	Storage Temperature	-35℃~+70℃
Humidity		≤85℃
lP grade		IP51
Dimension		160×112×60mm
Weight	Net weight	0.5kg
	Weight	1.0kg

DDS686(QBM12) Series Electronic Meter

1 Overview

DDS686
(QBM12-1)

DDS686(QBM12-1)/(QBM12-2)
1.Bidirectional measurement of actice energy
2.Extension terminals cover, in order to protect to use safety
3.Standard: BREBP ublication: 379.1999,Revision:8, Date: September, 2014
4.LED lights: Power, Pulse, Tamper, Reverse
5.8 digits dislay energy, 7 digits for serial No.and instant valve measurement
6.Maximum demand: monthly billing, Billing date/time set up
7. Supply more tamper type, Neutral line sensor for tampering-proof, Detectingbypass,neutral line earthed, etc.
8. Neutral Missing start power: 10ow
9.Instantaneous value measurement(kW,V, A, kVA, kVar, Cos, Hz)
10.Display readable without main pow(RWP)
11.LCD backlights to increase readabilty in low light conditions

DDS686
(QBM12-2)

2 Technical parameters

Specification		DDS686(QBM12-1)	DDS686(QBM12-2)
Standards		IEC 62052-11:2003	IEC 62053-21:2003
Accuracy	Active	1.0	1.0, 0.5
voltage	Rated current	230V	230V
	Range	0.8Un–1.2Un	0.8Un–1.2Un
	Limit	1.7Un-1.3 Un	1.7Un-1.3 Un
Frequency		50Hz	50Hz
Current	Range	10(60)A	10(60)A
Starting Current		0.4%lb	0.4%lb
Constant	Active	1600imp/KWh	1600imp/KWh
Display	Type	LCD	LCD
	Digit	6+2+7	6+2+8
Power Consumption	Voltage Circuit	≤1.0W,10VA	≤1.0W,10VA
	Current Circuit	≤1VA	≤1VA
Communication	Interface	\	\
Temperature Condition	Work Temperature	-25℃ ~+55℃	-25℃ ~+55℃
	Storage Temperature	-35℃ ~+70℃	-35℃ ~+70℃
Humidity		≤85℃	≤85℃
IP grade		IP51	IP51
Dimension		160×112×60mm	210×141×61mm
Weight	Net weight	0.5kg	0.8 kg
	Weight	1.0kg	1.2 kg

DTS256(QBM31) Series Electronic Meter

1 Overview

DTS256
(QBM31-1)

DTS256(QBM31-1)
1. Unidirectional or Bi-directional measurement configurable
2. Energy Measurement Function: Measure active energy
3. LED impulse output for calibration
4. Data reserved over 100 years under power off5.Adopts anti-magnetic anti-reverse register

DTS256(QBM31-2)
1. Unidirectional or Bi-directional measurement configurable
2. Three phase active energy measurement, absolute measurement for reverse energy
3. LED impulse output for calibration
4. Data reserved over 100 years under power off
5. Display readable without main pow(RWP)
6. LCD backlights to increase readabilty in low light conditions
7. New circuit design, with anti-electromagnetic interference ability, excellent error characteristics and excellent EMC performance

2 Product parameters

DTS256
(QBM31-2)

Specification		DTS256(QBM311)	DTS256(QBM31-2)
Standards		IEC 62052-11:2003 IEC 62053-21:2003 IEC 62053-23:2003 IEC 62056-21	
Accuracy	Active	1.0	1.0
	Reactive	/	2.0
voltage	Rated	3×57.7/100V~3×240/415V	3×57.7/100V~3×240/415V
	Range	0.8Un–1.2Un	0.8Un–1.2Un
	Limit	1.7Un-1.3 Un	1.7Un-1.3 Un
Frequency		50Hz/60Hz	50Hz/60Hz
Current	Range	1.5(6)A, 5(30)A, 5(60)A, 10(100)A	1.5(6)A, 5(30)A, 5(60)A, 10(100)A
Starting Current		≤0.4%Ib	≤0.4%Ib
Constant	Active	3200, 1600, 800, 400imp /KWh	3200, 1600, 800, 400imp /KWh
	Reactive	/	3200, 1600, 800, 400imp /Kvarh
Display	Type	LCD	LCD
	Digit	6+2	6+2
Power Loss	Voltage Circuit	≤0.5W,7VA	≤0.5W,7VA
	Current Circuit	≤0.5VA	≤0.5VA
Communication	Interface	IR, RS485	Optical, RS485
Temperature Condition	Work Temperature	-25℃~+55℃	-25℃~+55℃
	Storage Temperature	-35℃~+70℃	-35℃~+70℃
Humidity		≤85℃	≤85℃
IP grade		IP54	IP54
Dimension		203×110×60mm	203×110×60mm
Weight	Net / Gross	0.6kg/0.75kg	0.6kg/0.75kg

DTS256(QBM32) Series Electronic Meter

1 Overview

DTS256
(QBM32-1)

DTS256(QBM32-1)
1. Unidirectional or Bi-directional measurement configurable
2. Three phase active energy measurement, absolute measurement for reverse energy
3. LED impulse output for calibration
4. Data reserved over 100 years under power off
5. Display readable without main pow(RWP)
6. LCD backlights to increase readabilty in low light conditions
7. Support infrared and RS485, RF(optional)

DTS256(QBM32-2)
1. Energy Measurement Function: Measure forward/ reversal, active/ reactive energy
2. lnstantaneous Parameters Measurement Function: measure instant active/ reactive total power. phase voltage/ current/ power factor, frequency
3. LED impulse output for calibration
4. Data reserved over 100 years under power off
5. Display readable without main pow(RWP)
6. LCD backlights to increase readabilty in low light conditions
7. Support infrared and RS485,RF(optional)
8. For details, please refer to User Manual

2 Technical parameters

DTS256
(QBM32-2)

Specification		DTS256(QBM32-1)	DTS256(QBM32-2)
Standards		IEC 62052-11:2003 IEC 62053-21:2003 IEC 62053-23:2003	
Accuracy	Active	1.0	1.0
Voltage	Reactive	/	2.0
	Rated	3×57.7/100V~3×240/415V	3×57.7/100V~3×240/415V
	Range	0.8Un–1.2Un	0.8Un–1.2Un
	Limit	1.7Un-1.3 Un	1.7Un-1.3 Un
Frequency		50Hz/60Hz	50Hz/60Hz
Current	Range	1.5(6)A, 5(30)A, 5(60)A, 10(100)A	1.5(6)A, 5(30)A, 5(60)A, 10(100)A
Starting Current		≤0.4%lb	≤0.4%lb
Constant	Active	3200, 1600, 800, 400imp /KWh	3200, 1600, 800, 400imp /KWh
	Reactive	/	3200, 1600, 800, 400imp /Kvarh
Display	Type	LCD	LCD
	Digit	6+2	6+2
Power Loss	Voltage Circuit	≤0.5W,7VA	≤0.5W,7VA
	Current Circuit	≤0.5VA	≤0.5VA
	lnterface	IR, RS485, RF	IR, RS485, RF
Temperature Condition	Work Temperature	-25℃~+55℃	-25℃~+55℃
	Storage Temperature	-35℃~+70℃	-35℃~+70℃
Humidity		≤85℃	≤85℃
lP grade		IP54	IP54
		203×110×60mm	203×110×60mm
Weight	Net / Gross	0.6kg/0.75kg	0.6kg/0.75kg

DTZY256, DDZY256 Series Smart Meter

DDZY256
(QSM11-1)

BS

DIN

CIU

1 Overview

1. Measurement of import/ export active energy, current energy balance, instant voltage, current, power.
2. Pre-payment function, and prepayment is loaded through 20-digit token
3. Tariffs function: support TOU tariffs and step tariff
4. Load control function Load limit configurable.
5. Events detection and record function, include cover opening, reverse, overload etc
6. Remote switch control functions: remote switch disconnect/ reconnect.
7. Message alarm function: the meter will inform users By sending message if disconnect when energy Reaches zero or power overload etc.
8. RTC: clock with calendar, timing, leap year Automatic conversion function.
9. Alarm by LED/Buzzer when low credit , overload, tamper.
10. Relay control: (1) the internal relay will be switched off when the top cover is opened (2) overload (3) out of remaining balance (4)RTC battery power down

2 Technical parameters

Specification		BS	DIN
Standards		IEC 62052-11:2003 IEC 62053-21:2003 IEC 62053-21:2003	
Accuracy	Accuracy	1.0	1.0
Voltage	Rated	230V	230V
	Range	0.8Un–1.2Un	0.8Un–1.2Un
	Limit	1.7Un-1.3 Un	1.7Un-1.3 Un
Frequency		50Hz	50Hz
Current	Range	5(60)A, 5(80)A, 5(100)A	5(60)A, 5(80)A, 5(100)A
Starting Current		≤0.4%Ib	≤0.4%Ib
Constant	Active	1000 imp /KWh	1000 imp /KWh
Display	Type	LCD	\
	Digit	6+2	\
Power Consumption	Voltage Circuit	≤1.0W,10VA	≤1.0W,10VA
	Current Circuit	≤1VA	≤1VA
Communication	Interface	Optical, PLC, RF Mbus	Optical, PLC, RF Mbus, SCSSCAAA9
Temperature Condition	Work Temperature	-25℃~+55℃	-25℃~+55℃
	Storage Temperature	-35℃~+70℃	-35℃~+70℃
Humidity		≤85℃	≤85℃
IP grade		IP54	IP54
Dimension		203×110×60mm	203×110×60mm
Weight	Net / Gross	0.5kg/1.0kg	0.5kg/1.0kg

DTZY256, DDZY256 Series Smart Meter

DDZY256
(QSM11-1)

BS

GPRS/3G

PLC

RF

1 Overview

1. Measurement of import/export active energy, current energy balance, instant voltage, current, power.
2. TOU multi-tariff: 12 tariff schedules, 8 tariffs,12 season charts, 25 special days
3. Events detection and record function, include cover opening, reverse, overload etc
4. Remote switch control functions: remote switch disconnect/ reconnect.
5. Communication function: with GPRS, 3G, PLC, RF, RS485 and optical Port.
6. RTC: clock with calendar, timing, leap year Automatic conversion function.
7. Demand calculation: interval type or slip type altematvely, Demand interval time can be programmed as 15/30/60 mins
8. Power grid detection and recording: record theovervoltage, under voltage, over current, power down, Unbalance current event and record the latest 10 events
9. Display: automatic rotation display and manual keyboarddisplay, the display item is programmable
10. Switchable between Prepaid and Postpaid function.

2 Technical parameters

Specification		DDZY256(QSM11-1)	
Standards		IEC 62052-11:2003 IEC 62053-21:2003 IEC 62055-41 IEC 62056-21	
Accuracy	Accuracy	1.0	1.0
Voltage	Rated	127V,230V	230V
	Range	0.8Un–1.2Un	0.8Un–1.2Un
	Limit	1.7Un-1.3 Un	1.7Un-1.3 Un
Frequency		50Hz/60Hz	50Hz
Current	Range	5(80)A	5(60)A, 5(80)A, 5(100)A
Starting Current		≤0.4%lb	≤0.4%lb
Constant	Active	1000 imp /KWh	1000 imp /KWh
Display	Type	LCD	\
	Digit	6+2	\
Power Consumption	Voltage Circuit	≤1.0W,10VA	≤1.0W,10VA
	Current Circuit	≤1VA	≤1VA
Communication	lnterface	Optical, PLC,GPRS, 3G, RF, PLC	Optical, PLC, RF Mbus, SCSSCAAA9
Temperature Condition	Work Temperature	-25℃~+55℃	-25℃~+55℃
	Storage Temperature	-35℃~+70℃	-35℃~+70℃
Humidity		≤85℃	≤85℃
lP grade		IP54	IP54
Dimension		203×110×60mm	203×110×60mm
Weight	Net / Gross	0.5kg/1.0kg	0.5kg/1.0kg

DTSY256 Series Prepayment Meter

1 Overview

DTSY256
(QPM31-1)

DTSY256(QPM31-1)
1. Bidirectional active energy measurement
2. One card one user, ease of electricity management
3. Data security: smart card optional embedded CoS plus dynamic 3DES encryption
4. Over credit and overload power off
5. Integrated prepaid vending system and consumption inspection feature6.For details, please refer to User Manual

DTSY256(QPM32-1)
1. Energy Measurement Function: Measure forward/ reversal, active/ reactive energy
2. Instantaneous Parameters Measurement Function: measure instant active/ reactive total power. phase voltage / current/ power factor, frequency
3. Tariffs function: support TOU tariffs and step tariff
2. One card one user, ease of electricity management
3. Multi-Tariff feature(optional),configurable tariff(peak, flat, valley)and TOD
4. Data security: smart card optional embedded CoS plus dynamic 3DES encryption
5. lR and RS485,RF(optional), PLC(optional)
6. Over credit and overload power off
7. lntegrated prepaid vending system and consumption inspection feature
8. For details, please refer to User Manual

DTSY256
(QPM32-1)

2 Technical parameters

Specification		DTS686((QPM31-1)	DTS686(QPM32-1)
Standards		IEC 62052-11:2003 IEC 62053-21:2003 IEC 62053-23:2003 IEC 62056-21	
Accuracy	Active	1.0	1.0
Voltage	Reactive	/	2.0
	Rated	3×57.7/100V~3×240/415V	3×57.7/100V~3×240/415V
	Range	0.8Un–1.2Un	0.8Un–1.2Un
	Limit	1.7Un-1.3 Un	1.7Un-1.3 Un
Frequency		50Hz/60Hz	50Hz/60Hz
Current	Range	1.5(6)A, 5(30)A, 5(60)A, 10(100)A	1.5(6)A, 5(30)A, 5(60)A, 10(100)A
Starting Current		≤0.4%lb	≤0.4%lb
Constant	Active	3200, 1600, 800, 400imp /KWh	3200, 1600, 800, 400imp /KWh
	Reactive	/	3200, 1600, 800, 400imp /Kvarh
Display	Type	LCD	LCD
	Digit	6+2	6+2
Power Loss	Voltage Circuit	≤0.5W,7VA	≤0.5W,7VA
	Current Circuit	≤0.5VA	≤0.5VA
	lnterface	/	Optical, RS485, RF, PLC, GPRS
Temperature Condition	Work Temperature	-25℃~+55℃	-25℃~+55℃
	Storage Temperature	-35℃~+70℃	-35℃~+70℃
Humidity		≤85℃	≤85℃
lP grade		IP54	IP54
		203×110×60mm	203×110×60mm
Weight	Net / Gross	0.6kg/0.75kg	0.6kg/0.75kg

E

Medium Voltage Apparatus

E001-E105

Medium Voltage Apparatus

Vacuum Circuit Breakers

Load Switches and Switch Disconnetors

Surge Arrester and Drop-out Fuse

Vacuum Circuit Breakers

ZN63A-12 Indoor Medium-voltage AC Vacuum Circuit Breaker

Page 001

ZN63A-24 Indoor Medium-voltage AC Vacuum Circuit Breaker

Page 009

VTM-12 Indoor Medium-voltage AC Permanent Magnet Vacuum Circuit Breaker

Page 015

VTG-12 Indoor Solid-Sealed Medium-voltage AC Vacuum Circuit Breaker

Page 022

VTG-24 Indoor Medium-voltage AC Vacuum Circuit Breaker

Page 030

ZW32-12(G)/T Outdoor Medium-voltage AC Vacuum Circuit Breaker

Page 037

ZW32-12(G)/M Outdoor Medium-voltage AC Permanent Magnet Vacuum Circuit Breaker

Page 043

ZW7-40.5 Outdoor Medium-voltage AC Vacuum Circuit Breaker

Page 049

Load Switches and Switch Disconnectors

FN12-12(D)/T630-20 Indoor Medium-voltage Pressure-Operated Load Switch
FN12-12R (D)/T125-31.5 Indoor Medium-voltage Pressure-Operated Load Switch – Fuse Combination Unit

Page 057

GN19-12 Indoor Medium-voltage AC Switch-disconnector

Page 073

FZN25-12(D)/T630-20 Indoor Medium-voltage AC Vacuum Load Switch
FZ-RN25-12(D)/T200-31.5 Indoor Medium-voltage AC Vacuum Load Switch – Fuse Combination Unit

Page 065

Surge Arrester and Drop-out Fuse

0.28～17kV Series Polymeric Housed Metal Oxide Surge Arrester

Page 076

Drop-out Fuse

Page 079

Switchgears

KYN28A-12 Series Armored Movable AC Metal-Enclosed Switchgear

Page 082

TGXR6-12 Series SF6 Fully-Insulated and Fully-Sealed Metal-Enclosed Ring Main Unit

E093

TGXR6-24 Series SF6 Fully-Insulated and Fully-Sealed Metal-Enclosed Ring Main Unit

E100

ZN63A-12 Indoor Medium-voltage AC Vacuum Circuit Breaker

1 Overview

1.1 Voltage level: AC 10kV, frequency 50 Hz, max. rated current up to 4000 A.
1.2 Used in KYN28A-12(GZS1) mid-mounted handcart switchgear and XGN fixed switchgear.

2 Type Designation

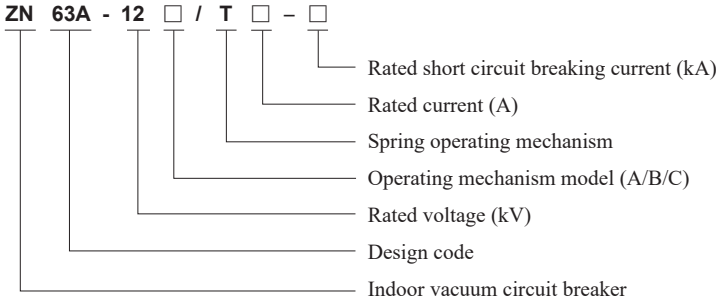

3 Working Environment Conditions

3.1 Ambient temperature: The upper limit is +40℃, and the lower limit is -15℃ (storage and transportation at -30℃ are allowed).

3.2 Relative humidity: The daily mean relative humidity is ≤95%, and the monthly mean relative humidity is ≤90%.

3.3 The daily mean vapor pressure is ≤ 2.2×10^{-3} MPa, and the monthly mean vapor pressure is ≤ 1.8×10^{-3} MPa.

3.4 The altitude does not exceed 1000 m.

3.5 The earthquake intensity does not exceed 8 degrees.

3.6 Mounted in a place where there is no fire, explosion hazards, serious pollution, chemical corrosion and severe vibration.

4 Technical Parameters

No.	Item	Unit	Value
1	Rated voltage	kV	12
2	Rated power frequency withstand voltage (1min)	kV	42
3	Rated lightning impulse withstand voltage (peak)	kV	75
4	Rated freq.	Hz	50
5	Rated short circuit duration	s	4
6	Rated closing and opening operating voltage	V	AC/DC220 AC/DC110
7	Closing time	ms	30~70
8	Opening time	ms	20~50
9	Contact closing bounce time	ms	≤3

ZN63A-12 Indoor Medium-voltage AC Vacuum Circuit Breaker

No.	Item	Unit	Value
10	Three-phase closing simultaneity	ms	≤2
11	Three-phase opening simultaneity	ms	≤2
12	Average opening speed (contact just open by 6mm)	m/s	0.9~1.3
13	Average closing speed	m/s	0.4~0.8
14	Circuit breaker grade		E2, C2, M2

5 Selection Information

Model	Rated voltage (kV)	Rated current (A)	Rated short circuit breaking current (kA)	Rated short circuit making current (kA)	Rated short time withstand voltage (kV)	Rated peak withstand voltage (kV)	Phase distance (mm)	Interpole gap (mm)
ZN63A-12/T630-20	12	630	20	50	20	50	150	275
ZN63A-12/T630-20	12	630	20	50	20	50	210	275
ZN63A-12/T630-25	12	630	25	63	25	63	150	275
ZN63A-12/T630-25	12	630	25	63	25	63	210	275
ZN63A-12/T630-31.5	12	630	31.5	80	31.5	80	150	275
ZN63A-12/T630-31.5	12	630	31.5	80	31.5	80	210	275
ZN63A-12/T1250-25	12	1250	25	63	25	63	150	275
ZN63A-12/T1250-25	12	1250	25	63	25	63	210	275
ZN63A-12/T1250-31.5	12	1250	31.5	80	31.5	80	150	275
ZN63A-12/T1250-31.5	12	1250	31.5	80	31.5	80	210	275
ZN63A-12/T1600-31.5	12	1600	31.5	80	31.5	80	210	275
ZN63A-12/T1600-40	12	1600	40	100	40	100	210	275
ZN63A-12/T2000-31.5	12	2000	31.5	80	31.5	80	275	310
ZN63A-12/T2000-40	12	2000	40	100	40	100	275	310
ZN63A-12/T2500-31.5	12	2500	31.5	80	31.5	80	275	310
ZN63A-12/T2500-40	12	2500	40	100	40	100	275	310
ZN63A-12/T3150-31.5	12	3150	31.5	80	31.5	80	275	310
ZN63A-12/T3150-40	12	3150	40	100	40	100	275	310
ZN63A-12/T4000-31.5	12	4000	31.5	80	31.5	80	275	310
ZN63A-12/T4000-40	12	4000	40	100	40	100	275	310

ZN63A-12 Indoor Medium-voltage AC Vacuum Circuit Breaker

6 Outline and Installation Dimensions

6.1 Handcart type circuit breaker (phase distance 150 mm) outline drawings:

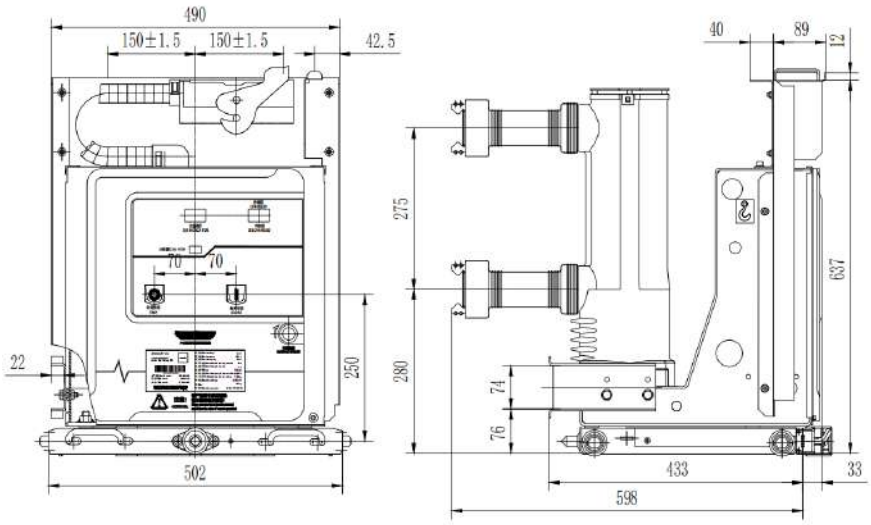

Rated current (A)	630	1250
With the size of the static contact(mm)	Φ35	Φ49

6.2 Handcart type circuit breaker (phase distance 210 mm) outline drawings:

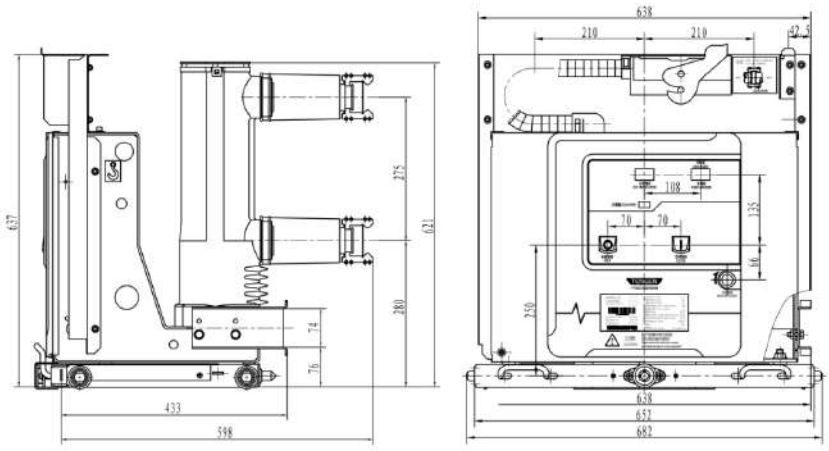

Rated current (A)	630	1250	1600
With the size of the static contact(mm)	Φ35	Φ49	Φ55

ZN63A-12 Indoor Medium-voltage AC Vacuum Circuit Breaker

6.3 Handcart type circuit breaker (phase distance 275 mm) outline drawings:

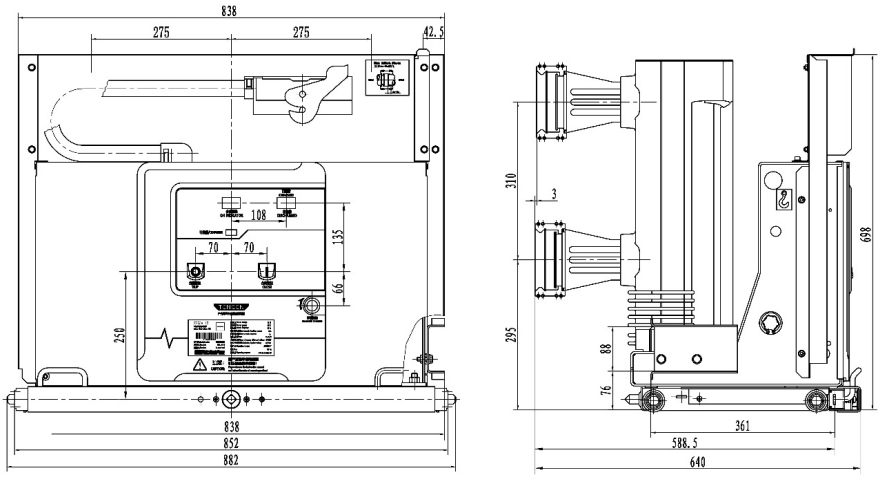

Rated current (A)	2000	2500	3150	4000
With the size of the static contact(mm)	Φ79	Φ109	Φ109	Φ109

6.4 Fixed type circuit breaker (phase distance 150 mm) outline drawings:

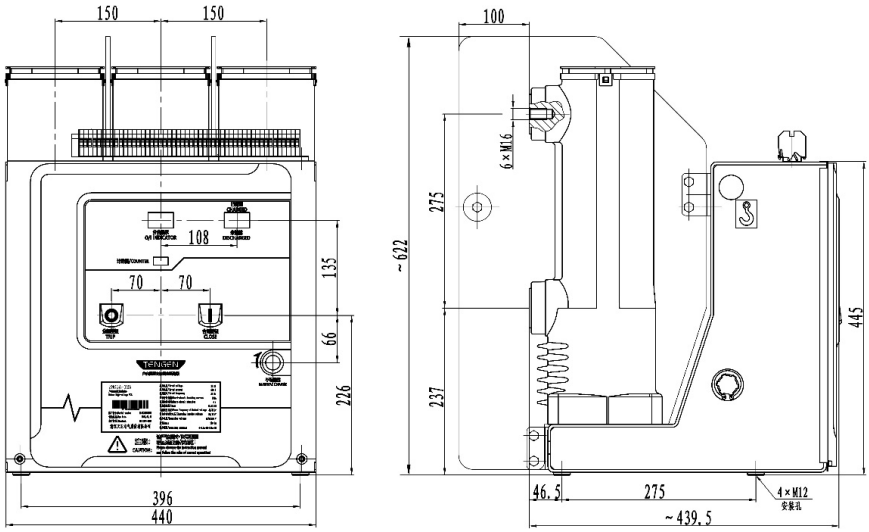

ZN63A-12 Indoor Medium-voltage AC Vacuum Circuit Breaker

6.5 Fixed type circuit breaker (phase distance 210 mm) outline drawings:

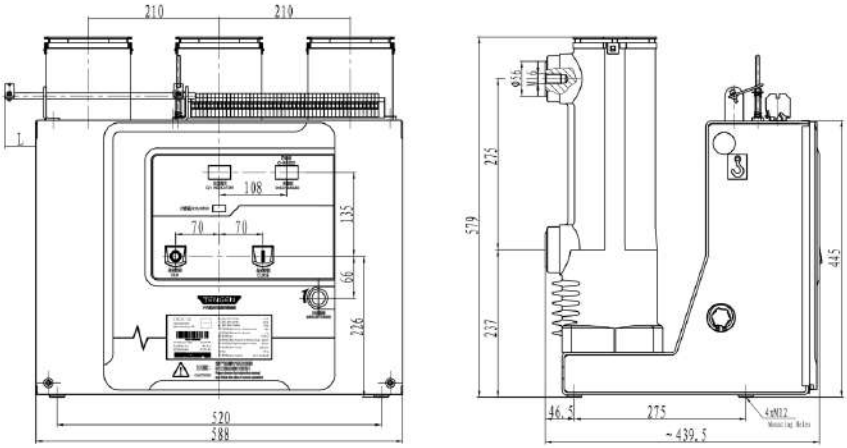

Note: Mechanism top interlock L=50mm (there are left or right extended interlock; the length can be customized according to the customer requirements)

6.6 Fixed type circuit breaker (phase distance 275 mm) outline drawings:

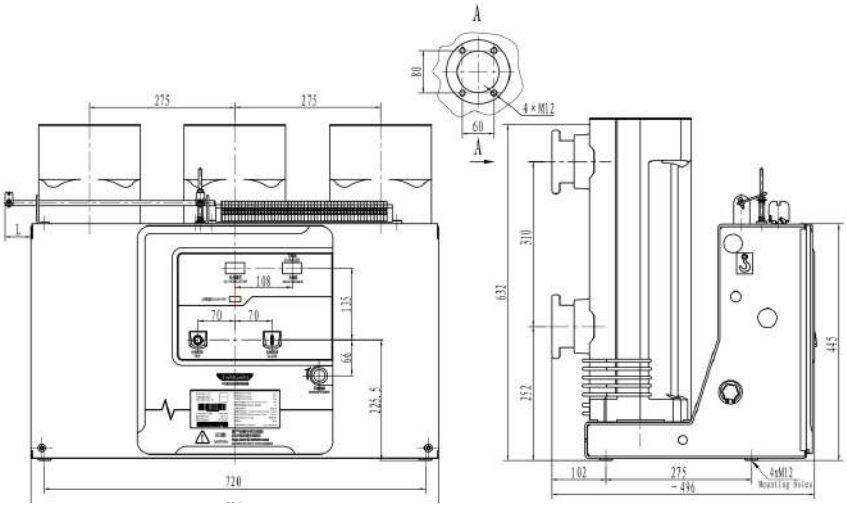

Note: Mechanism top interlock L=50mm (there are left or right extended interlock; the length can be customized according to the customer requirements)

ZN63A-12 Indoor Medium-voltage AC Vacuum Circuit Breaker

7 Electrical Diagram

7.1 Handcart type schematic diagram

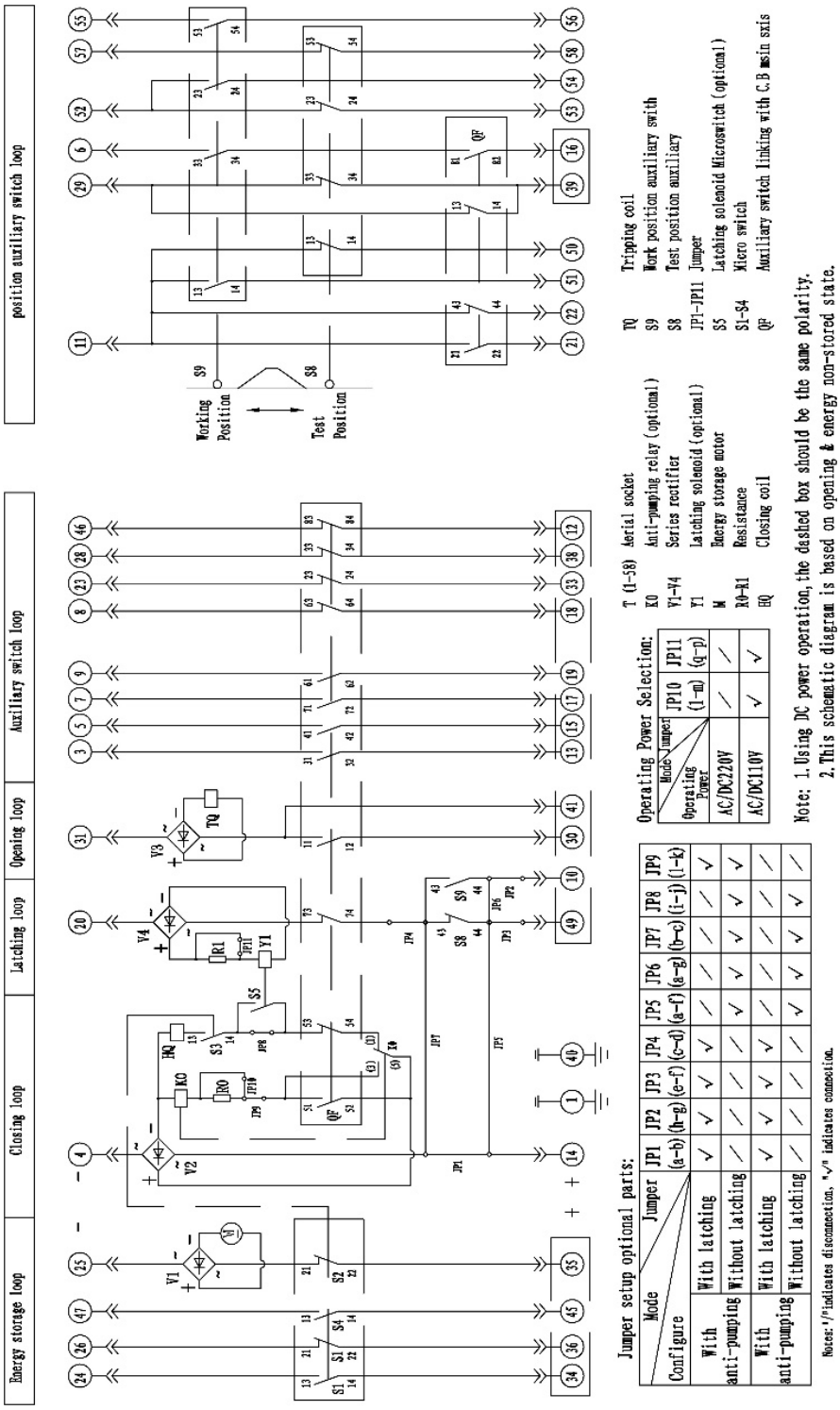

ZN63A-12 Indoor Medium-voltage AC Vacuum Circuit Breaker

7.2 Fixed type schematic diagram

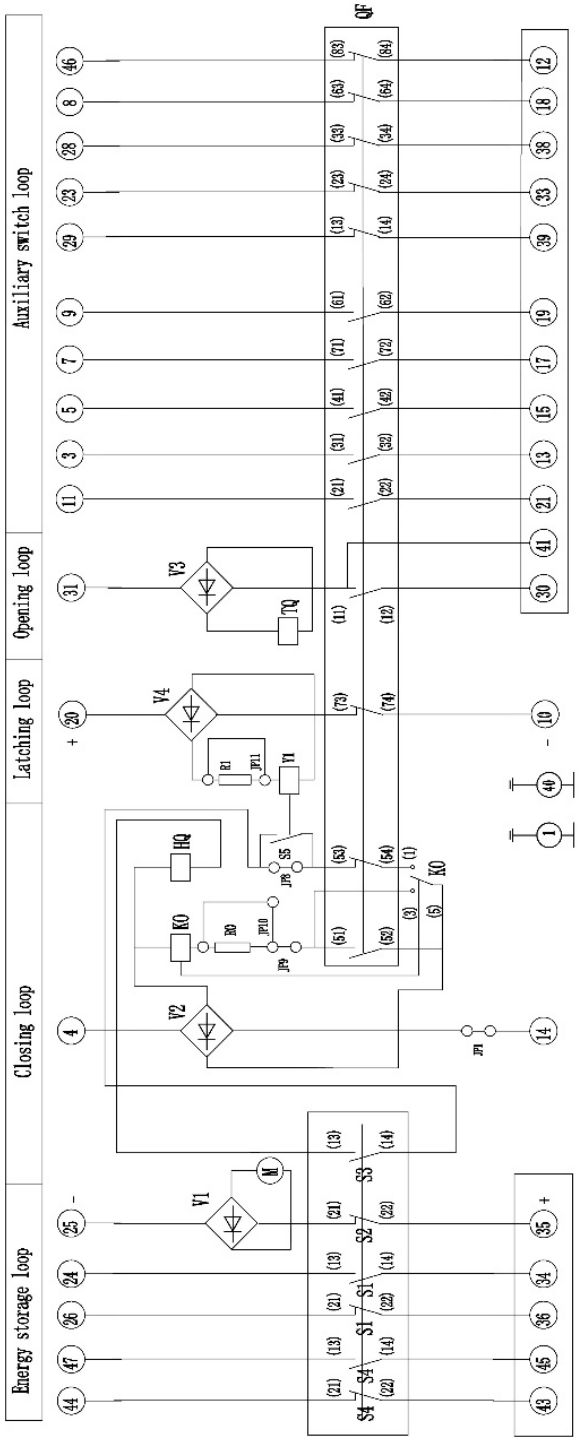

HQ:Closing coil

S1～4:Micro switch

S5:Latching solenoid Microswitch (optional)

TQ:Tripping coil

QF:Auxiliary switch linking with C.B main axis

M:Energy storage motor

V1:Latching solenoid (optional)

R0-R1:Resistance

KO:Anti-pumping relay (optional)

V1-V4:Series rectifier

JP8-JP11:Jumper

Operating Power Selection:

Operating Power \ Mode Jumper	JP10 (i-m)	JP11 (q-p)
AC/DC220V	/	/
AC/DC110V	√	√

Note: 1. Using DC power operation, the dashed box should be the same polarity.
2. This schematic diagram is based on opening & energy non-stored state.

Jumper setup optional parts:

Configure \ Mode \ Jumper		JP1 (a-b)	JP2 (h-g)	JP3 (e-f)	JP4 (c-d)	JP5 (a-f)	JP6 (a-g)	JP7 (b-c)	JP8 (i-j)	JP9 (l-k)
With anti-pumping	With latching	√	/	/	/	/	/	/	/	√
	Without latching	√	/	/	/	/	/	/	√	√
With anti-pumping	With latching	√	/	/	/	/	/	/	/	/
	Without latching	√	/	/	/	/	/	/	√	/

Notes: '/' indicates disconnection, '√' indicates connection.

ZN63A-12 Indoor Medium-voltage AC Vacuum Circuit Breaker

8 Ordering Notice

Please specify the following items when ordering:

8.1 Name, model, specification and order quantity of circuit breaker;

8.2 Rated voltage, rated current and rated short circuit breaking current of circuit breaker;

8.3 Name and type of the operating mechanism;

8.4 Name and quantity of spare parts and replacement parts;

Note: If the customer has other special requirements, they shall be specified when ordering.

ZN63A-24 Indoor Medium-voltage AC Vacuum Circuit Breaker

1 Overview

1.1 Voltage level: AC24kV, frequency 50Hz; max. rated current up to 1600A
1.2 Used in the KYN28A-24(GZS1) mid-mounted handcart switchgear and XGN fixed switchgear

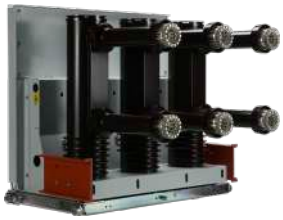

2 Type Designation

ZN 63A - 24 / T □ – □

- □ – Rated short circuit breaking current (kA)
- □ – Rated current (A)
- T – Spring operating mechanism
- 24 – Rated voltage (kV)
- 63A – Design code
- ZN – Indoor vacuum circuit breaker

3 Working Environment Conditions

3.1 Ambient temperature: The upper limit is +40°C, and the lower limit is -15°C (-30°C storage and transportation conditions allowed)

3.2 Relative humidity: The mean daily relative humidity is ≤95%, and the mean monthly relative humidity is ≤90%.

3.3 The mean daily vapor pressure is 2.2×10^{-3} MPa, and the mean monthly vapor pressure is 1.8×10^{-3} MPa.

3.4 The altitude does not exceed 1000 m.

3.5 The seismic intensity does not exceed 8 degrees.

3.6 Installed in places where there shall be no fire, explosion hazards, serious pollution, chemical corrosion and severe vibration.

4 Technical Parameters

No.	Item	Unit	Value
1	Rated voltage	kV	24
2	Rated power frequency withstand voltage (1 min)	kV	65
3	Rated lightning impulse withstand voltage (peak)	kV	125
4	Rated frequency	Hz	50
5	Rated short circuit duration time	s	4
6	Rated closing and opening operating voltage	V	AC/DC220 AC/DC110
7	Closing time	ms	30~70
8	Opening time	ms	20~50
9	Contact closing bounce time	ms	≤2

ZN63A-24 Indoor Medium-voltage AC Vacuum Circuit Breaker

No.	Item	Unit	Value
10	Three-phase closing simultaneity	ms	≤2
11	Three-phase opening simultaneity	ms	≤2
12	Average opening speed (contact just opened by 6mm)	m/s	1.2~1.6
13	Average closing speed	m/s	0.6~1.0
14	Circuit breaker grade		E2, C2, M2

5 Selection Information

Model	Rated voltage (kV)	Rated current (A)	Rated short circuit breaking current (kA)	Rated short circuit making current (kA)	Rated short time withstand voltage (kV)	Rated peak withstand voltage (kV)	Phase distance (mm)	Interpole gap (mm)
ZN63A-24/T630-20	24	630	20	50	65	125	275	310
ZN63A-24/T630-25	24	630	25	63	65	125	275	310
ZN63A-24/T630-31.5	24	630	31.5	80	65	125	275	310
ZN63A-24/T1250-25	24	1250	25	63	65	125	275	310
ZN63A-24/T1250-31.5	24	1250	31.5	80	65	125	275	310
ZN63A-24/T1250-40	24	1250	40	100	65	125	275	310
ZN63A-24/T1600-31.5	24	1600	31.5	80	65	125	275	310

ZN63A-24 Indoor Medium-voltage AC Vacuum Circuit Breaker

6 Outline and Installation Dimensions

6.1 Handcart type circuit breaker outline diagram:

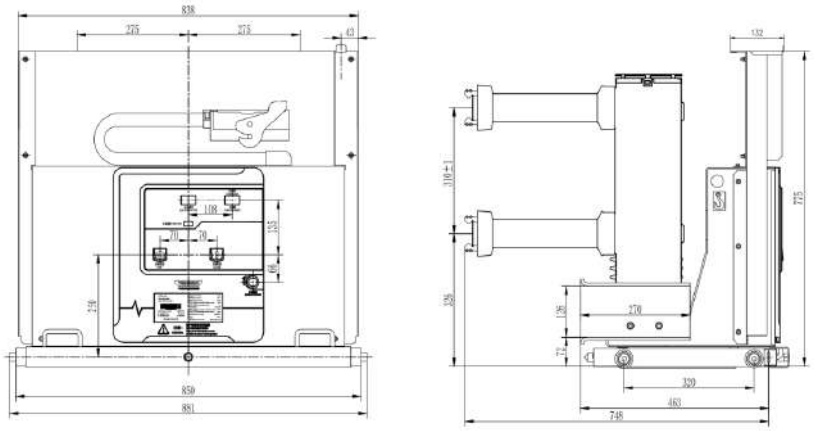

Rated current (A)	630	1250	1600
With the size of the static contact(mm)	Φ35	Φ49	Φ55

6.2 Fixed type circuit breaker outline diagram:

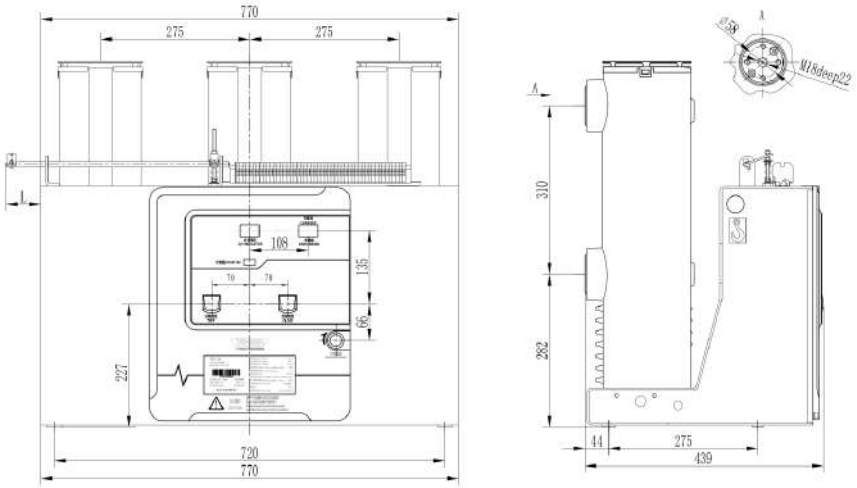

Note: The top interlock of the mechanism is L=50mm (there are left and right extended type interlocks, and the length can be customized according to the customer requirements)

ZN63A-24 Indoor Medium-voltage AC Vacuum Circuit Breaker

7 Electrical Diagram

7.1 Handcart type schematic diagram

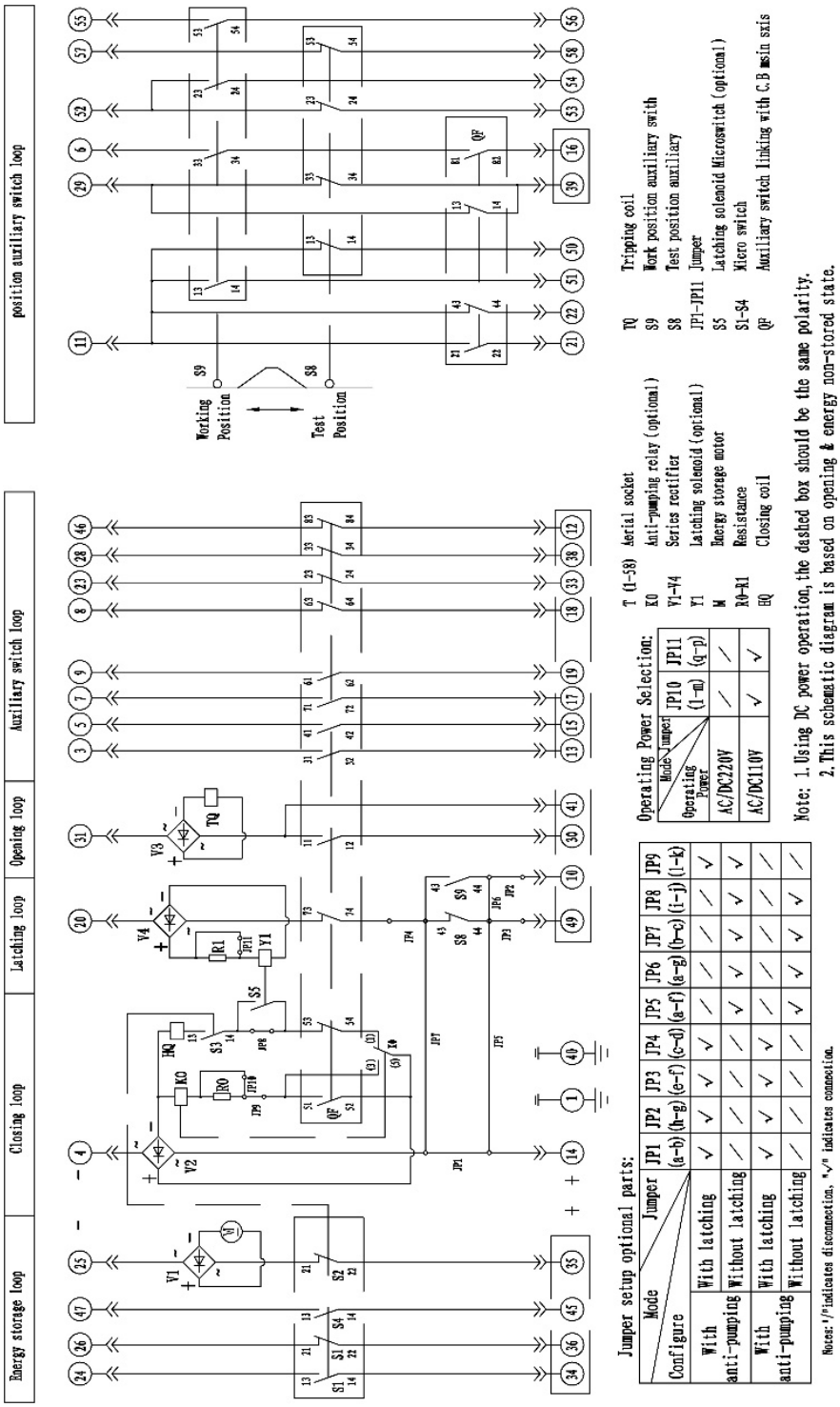

ZN63A-24 Indoor Medium-voltage AC Vacuum Circuit Breaker

7.2 Fixed type schematic diagram

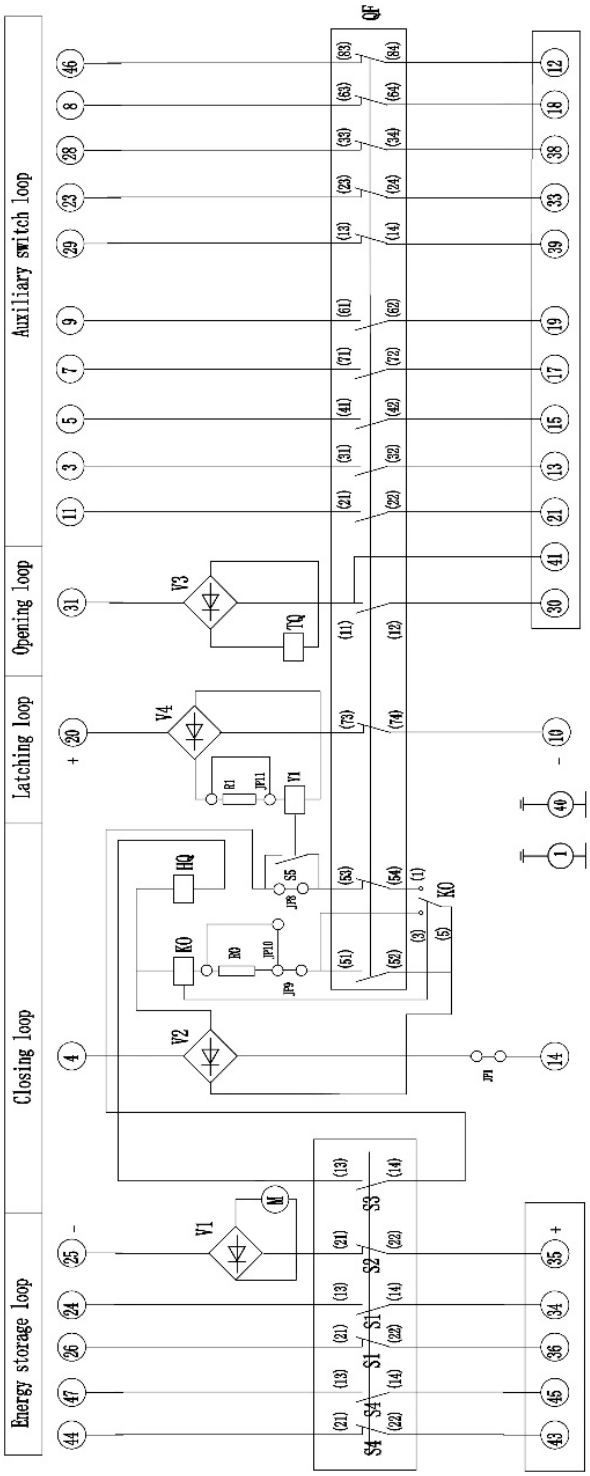

HQ:Closing coil

S1～4:Micro switch

SS:Latching solenoid Microswitch (optional)

TQ:Tripping coil

QF:Auxiliary switch linking with C.B main axis

M:Energy storage motor

Y1:Latching solenoid (optional)

R0-R1:Resistance

KO:Anti-pumping relay (optional)

V1-V4:Series rectifier

JP8-JP11:Jumper

Operating Power Selection:

Operating Power \ Mode Jumper	JP10 (i-m)	JP11 (q-p)
AC/DC220V	/	/
AC/DC110V	√	√

Note: 1. Using DC power operation, the dashed box should be the same polarity.
2. This schematic diagram is based on opening & energy non-stored state.

Jumper setup optional parts:

Configure \ Mode	Jumper	JP1 (a-b)	JP2 (h-g)	JP3 (e-f)	JP4 (c-d)	JP5 (a-f)	JP6 (a-g)	JP7 (b-c)	JP8 (i-j)	JP9 (l-k)
With anti-pumping	With latching	√	/	/	/	/	/	/	/	√
	Without latching	√	/	/	/	/	/	/	√	√
With anti-pumping	With latching	√	/	/	/	/	/	/	/	/
	Without latching	√	/	/	/	/	/	/	√	/

Notes: "/" indicates disconnection, "√" indicates connection.

ZN63A-24 Indoor Medium-voltage AC Vacuum Circuit Breaker

8 Ordering Notice

Please specify the following items when ordering:

8.1 Name, model, specification and order quantity of circuit breaker;

8.2 Rated voltage, rated current and rated short circuit breaking current of circuit breaker;

8.3 Name and type of operating mechanism;

8.4 Names and quantity of spare parts and components;

Note: Any special requirements of the customer shall be indicated when ordering.

VTM-12 Indoor Medium-voltage AC Permanent Magnet Vacuum Circuit Breaker

1 Overview

1.1 Voltage level: AC10kV, frequency 50Hz, max. rated current up to 4000A.
1.2 Purpose: Used in KYN28A-12(GZS1) mid-mounted handcart switchgear and XGN fixed switchgear.

2 Type Designation

VT M - □ / □ – □

- VT — Indoor vacuum circuit breaker
- M — Permanent magnetic actuator
- □ — Rated voltage (kV)
- □ — Rated current (A)
- □ — Rated short circuit breaking current (kA)

3 Working Environment Conditions

3.1 Ambient temperature: The upper limit is +40°C, and the lower limit is -15°C (storage and transportation at -30°C is allowed).

3.2 Relative humidity: The mean daily relative humidity is ≤95%, and the monthly mean relative humidity is ≤90%.

3.3 The daily mean vapor pressure is $\leq 2.2\times10^{-3}$MPa, and the monthly mean vapor pressure is $\leq 1.8\times10^{-3}$MPa.

3.4 The altitude does not exceed 1000m.

3.5 The seismic intensity does not exceed 8 degrees.

Mounted in a place where there is no fire, explosion hazards, serious pollution, chemical corrosion and severe vibration.

4 Technical Parameters

No.	Item	Unit	Value
1	Rated voltage	kV	12
2	Rated power frequency withstand voltage (1min)	kV	42
3	Rated lightning impulse withstand voltage (peak)	kV	75
4	Rated freq.	Hz	50
5	Rated short circuit duration time	s	4
6	Rated closing and opening operating voltage	V	AC/DC220 AC/DC110
7	Closing time	ms	30~70
8	Opening time	ms	20~50
9	Contact closing bounce time	ms	≤3
10	Three-phase closing simultaneity	ms	≤2
11	Three-phase opening simultaneity	ms	≤2
12	Average opening speed (contact just opened by 6mm)	m/s	0.9~1.3

VTM-12 Indoor Medium-voltage AC Permanent Magnet Vacuum Circuit Breaker

No.	Item	Unit	Value
13	Average closing speed	m/s	0.4~0.8
14	Circuit breaker grade		E2, C2, M2

5 Scope of Supply

Model	Rated voltage (kV)	Rated current (A)	Rated short circuit breaking current (kA)	Rated short circuit making current (kA)	Rated short time withstand voltage (kV)	Rated peak withstand voltage (kV)	Phase distance (mm)	Interpole gap (mm)
VTM-12/630-20	12	630	20	50	20	50	210	275
VTM-12/630-25	12	630	25	63	25	63	210	275
VTM-12/630-31.5	12	630	31.5	80	31.5	80	210	275
VTM-12/1250-25	12	1250	25	63	25	63	210	275
VTM-12/1250-31.5	12	1250	31.5	80	31.5	80	210	275
VTM-12/1600-31.5	12	1600	31.5	80	31.5	80	210	275
VTM-12/1600-40	12	1600	40	100	40	100	210	275
VTM-12/2000-31.5	12	2000	31.5	80	31.5	80	275	310
VTM-12/2000-40	12	2000	40	100	40	100	275	310
VTM-12/2500-31.5	12	2500	31.5	80	31.5	80	275	310
VTM-12/2500-40	12	2500	40	100	40	100	275	310
VTM-12/3150-31.5	12	3150	31.5	80	31.5	80	275	310
VTM-12/3150-40	12	3150	40	100	40	100	275	310
VTM-12/4000-31.5	12	4000	31.5	80	31.5	80	275	310
VTM-12/4000-40	12	4000	40	100	40	100	275	310

VTM-12 Indoor Medium-voltage AC Permanent Magnet Vacuum Circuit Breaker

6 Outline and Installation Dimensions (The structural dimensions of the insulating cylinder are consistent with those of the sealed polar post)

6.1 Handcart type circuit breaker (phase distance 210 mm) outline drawings:

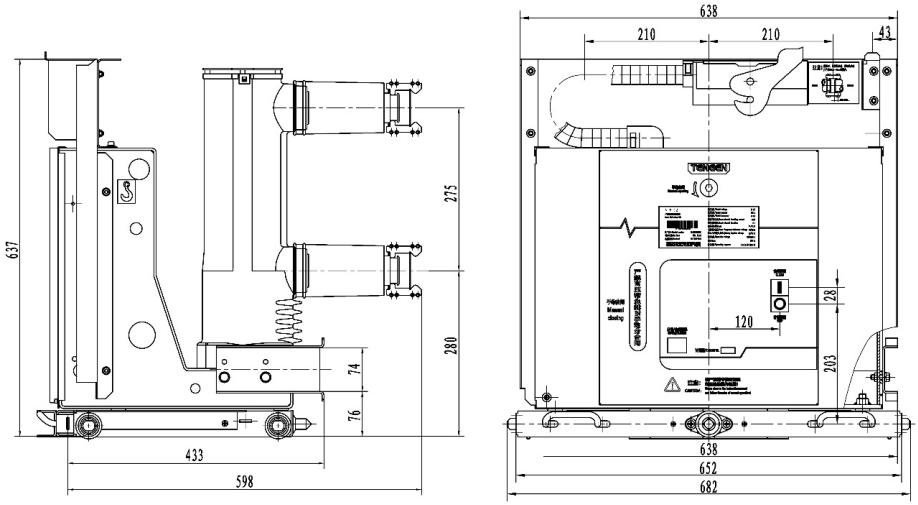

Rated current (A)	630	1250	1600
With the size of the static contact (mm)	Φ35	Φ49	Φ55

6.2 Handcart type circuit breaker (phase distance 275 mm) outline drawings:

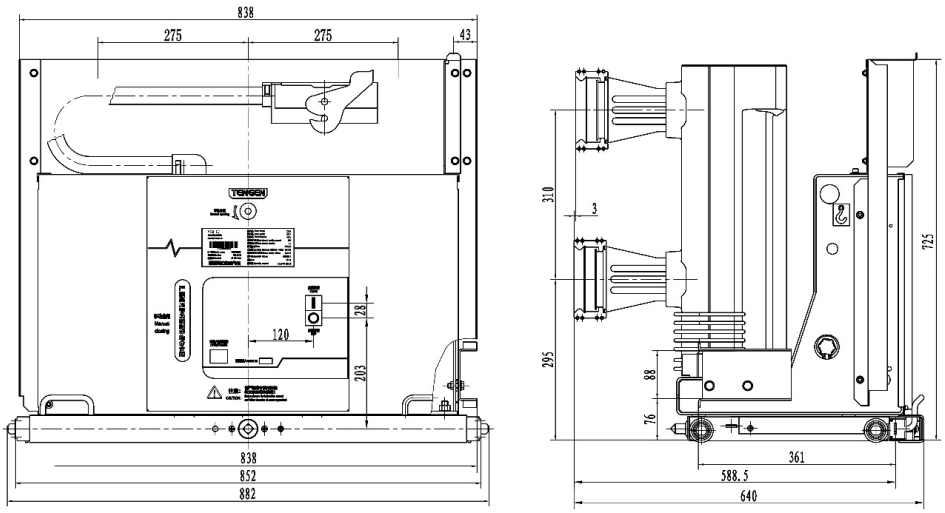

Rated current (A)	2000	2500	3150	4000
With the size of the static contact (mm)	Φ79	Φ109	Φ109	Φ109

6.3 Fixed type circuit breaker (phase distance 210 mm) outline drawings:

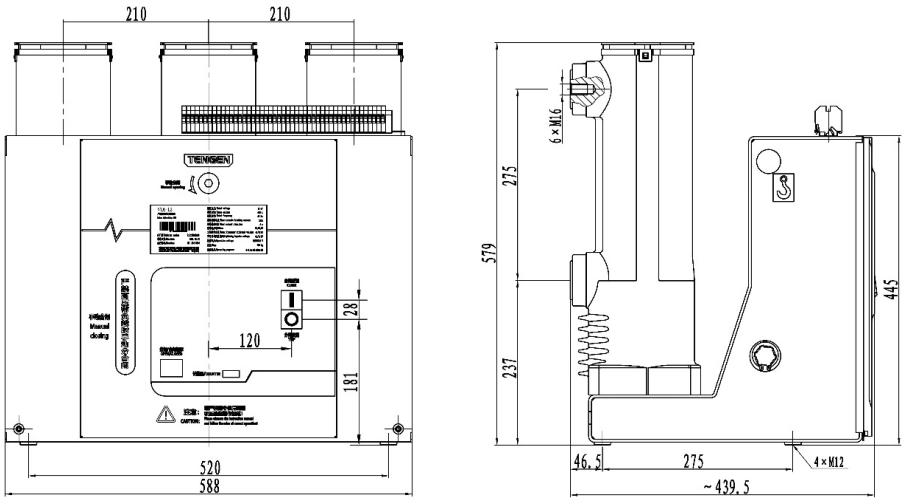

6.4 Fixed type circuit breaker (phase distance 275 mm) outline drawings:

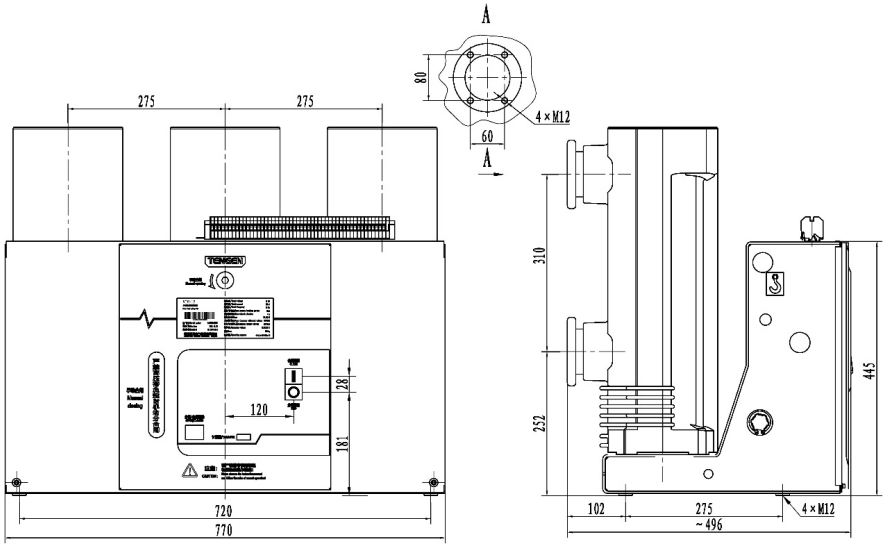

VTM-12 Indoor Medium-voltage AC Permanent Magnet Vacuum Circuit Breaker

7 Circuit Breaker Electrical Schematic Diagram

7.1.Handcart type schematic diagram

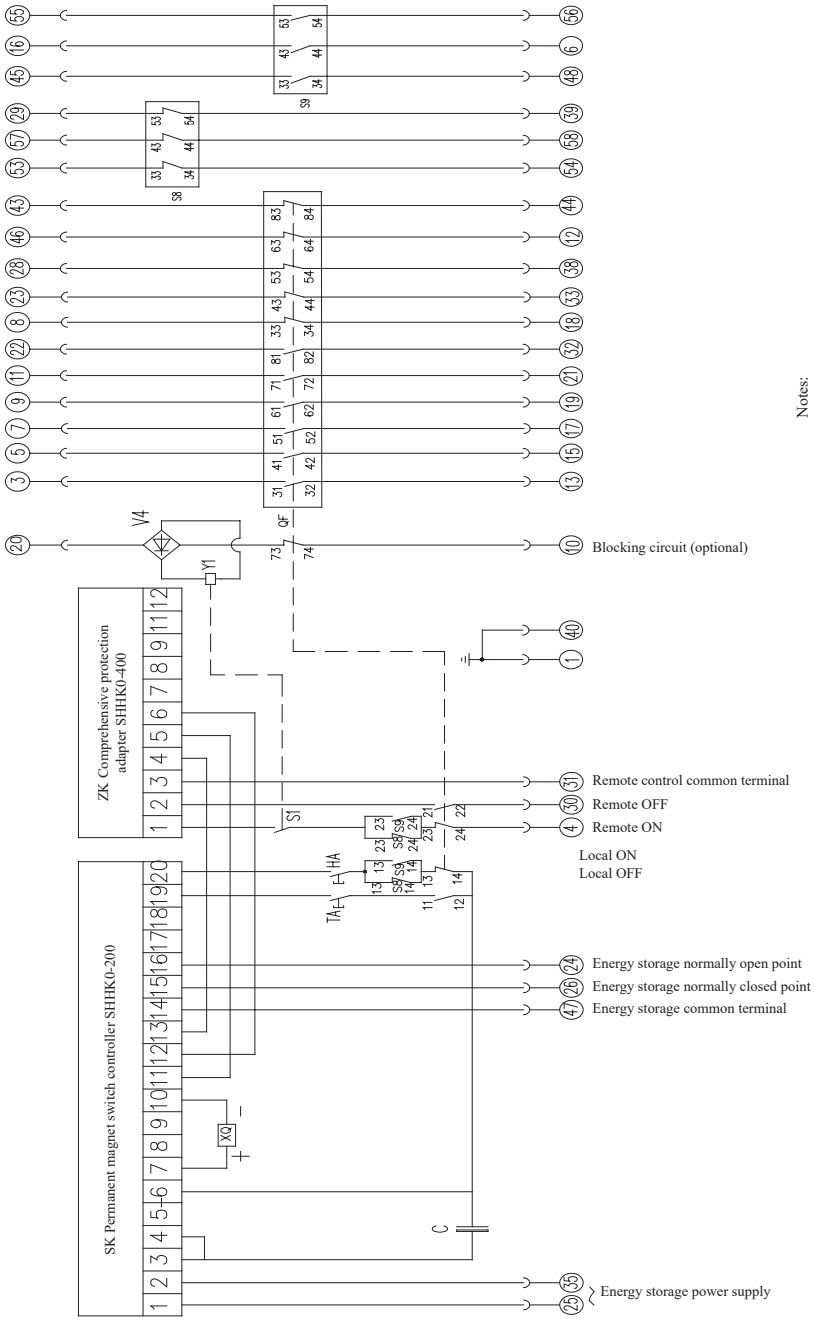

Notes:
1.In this schematic diagram, the circuit breaker is in the OFF state in the handcart test position, and the mechanism is in the energy non-storage state;
2.The power supply of control circuit is available for both AC and DC.

S8, S9: Test position and working position	XQ: Closing and opening coil	SK: Permanent magnet switch controller	ZK: Comprehensive protector
HA: Local ON button	TA: Local OFF button	QF: Aux. switch	C: Capacitor

VTM-12 Handcart type secondary wiring diagram

7.2 Fixed type schematic diagram

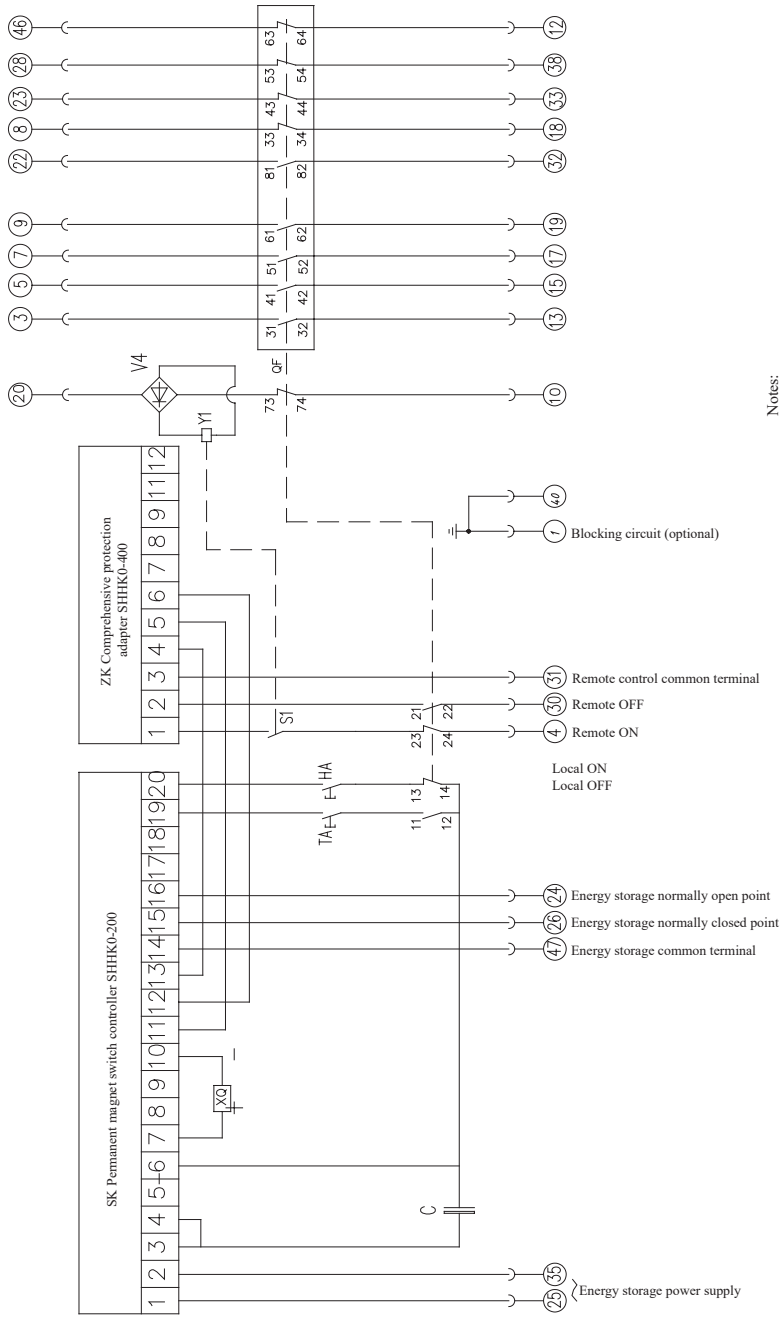

VTM-12 Fixed type secondary wiring diagram

VTM-12 Indoor Medium-voltage AC Permanent Magnet Vacuum Circuit Breaker

8 Ordering Notice

Please specify the following items when ordering:

8.1 Name, model, specification and order quantity of circuit breaker;

8.2 Rated voltage, rated current and rated short circuit breaking current of circuit breaker;

8.3 Name and type of the operating mechanism;

8.4 Name and quantity of spare parts and replacement parts;

Note: If the customer has other special requirements, they shall be specified when ordering.

VTG-12 Indoor Solid-Sealed Medium-voltage AC Vacuum Circuit Breaker

1 Overview

1.1 Voltage level: AC 10kV, frequency 50 Hz, max. rated current up to 4000 A.
1.2 Used in KYN28A-12(GZS1) mid-mounted handcart switchgear and XGN fixed switchgear.

2 Type Designation

V TG - 12 / T □ – □

- □ – □: Rated short circuit breaking current (kA)
- □: Rated current (A)
- T: Spring operating mechanism
- 12: Rated voltage (kV)
- TG: Enterprise code
- V: Indoor vacuum circuit breaker

3 Working Environment Conditions

3.1 Ambient temperature: The upper limit is +40℃, and the lower limit is -15℃ (storage and transportation at -30℃ are allowed).

3.2 Relative humidity: The daily mean relative humidity is ≤95%, and the monthly mean relative humidity is ≤90%.

3.3 The daily mean vapor pressure is ≤ 2.2×10^{-3} MPa, and the monthly mean vapor pressure is ≤ 1.8×10^{-3} MPa.

3.4 The altitude does not exceed 1000 m.

3.5 The earthquake intensity does not exceed 8 degrees.

3.6 Mounted in a place where there is no fire, explosion hazards, serious pollution, chemical corrosion and severe vibration.

4 Technical Parameters

No.	Item	Unit	Value
1	Rated voltage	kV	12
2	Rated power frequency withstand voltage (1min)	kV	42
3	Rated lightning impulse withstand voltage (peak)	kV	75
4	Rated freq.	Hz	50
5	Rated short circuit duration	s	4
6	Rated closing and opening operating voltage	V	AC/DC220 AC/DC110
7	Closing time	ms	30~70
8	Opening time	ms	20~50
9	Contact closing bounce time	ms	≤3

VTG-12 Indoor Solid-Sealed Medium-voltage AC Vacuum Circuit Breaker

No.	Item	Unit	Value
10	Three-phase closing simultaneity	ms	≤2
11	Three-phase opening simultaneity	ms	≤2
12	Average opening speed (contact just open by 6mm)	m/s	0.9~1.3
13	Average closing speed	m/s	0.4~0.8
14	Circuit breaker grade		E2, C2, M2

5 Selection Information

Model	Rated voltage (kV)	Rated current (A)	Rated short circuit breaking current (kA)	Rated short circuit making current (kA)	Rated short time withstand voltage (kV)	Rated peak withstand voltage (kV)	Phase distance (mm)	Interpole gap (mm)
VTG-12/T630-20	12	630	20	50	20	50	150	275
VTG-12/T630-20	12	630	20	50	20	50	210	275
VTG-12/T630-25	12	630	25	63	25	63	150	275
VTG-12/T630-25	12	630	25	63	25	63	210	275
VTG-12/T630-31.5	12	630	31.5	80	31.5	80	150	275
VTG-12/T630-31.5	12	630	31.5	80	31.5	80	210	275
VTG-12/T1250-25	12	1250	25	63	25	63	150	275
VTG-12/T1250-25	12	1250	25	63	25	63	210	275
VTG-12/T1250-31.5	12	1250	31.5	80	31.5	80	150	275
VTG-12/T1250-31.5	12	1250	31.5	80	31.5	80	210	275
VTG-12/T1600-31.5	12	1600	31.5	80	31.5	80	210	275
VTG-12/T1600-40	12	1600	40	100	40	100	210	275
VTG-12/T2000-31.5	12	2000	31.5	80	31.5	80	275	310
VTG-12/T2000-40	12	2000	40	100	40	100	275	310
VTG-12/T2500-31.5	12	2500	31.5	80	31.5	80	275	310
VTG-12/T2500-40	12	2500	40	100	40	100	275	310
VTG-12/T3150-31.5	12	3150	31.5	80	31.5	80	275	310
VTG-12/T3150-40	12	3150	40	100	40	100	275	310
VTG-12/T4000-31.5	12	4000	31.5	80	31.5	80	275	310
VTG-12/T4000-40	12	4000	40	100	40	100	275	310

VTG-12 Indoor Solid-Sealed Medium-voltage AC Vacuum Circuit Breaker

6 Outline and Installation Dimensions

6.1 Handcart type circuit breaker (phase distance 150 mm) outline drawings:

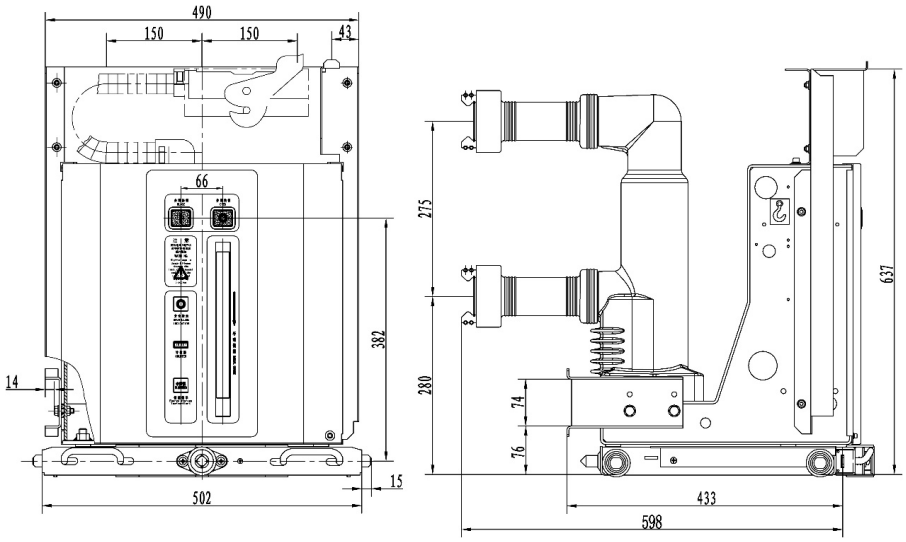

Rated current (A)	630	1250
With the size of the static contact(mm)	Φ35	Φ49

6.2 Handcart type circuit breaker (phase distance 210 mm) outline drawings

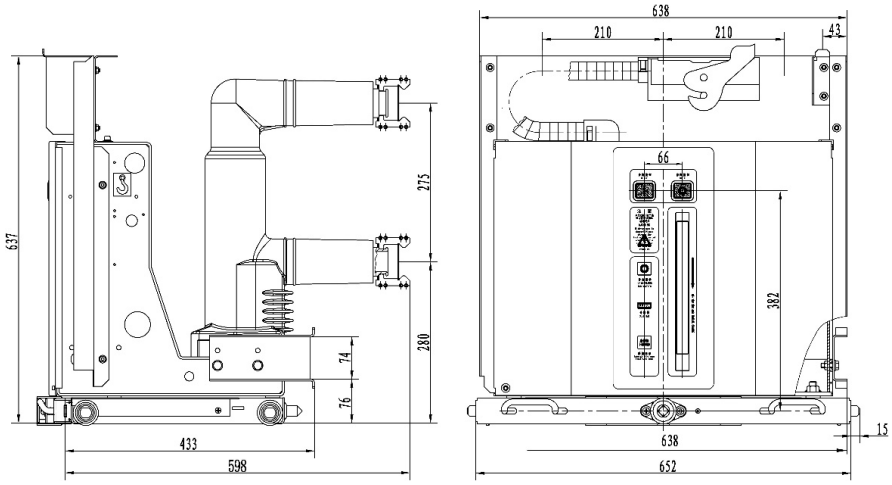

Rated current (A)	630	1250	1600
With the size of the static contact(mm)	Φ35	Φ49	Φ55

VTG-12 Indoor Solid-Sealed Medium-voltage AC Vacuum Circuit Breaker

6.3 Handcart type circuit breaker (phase distance 275 mm) outline drawings

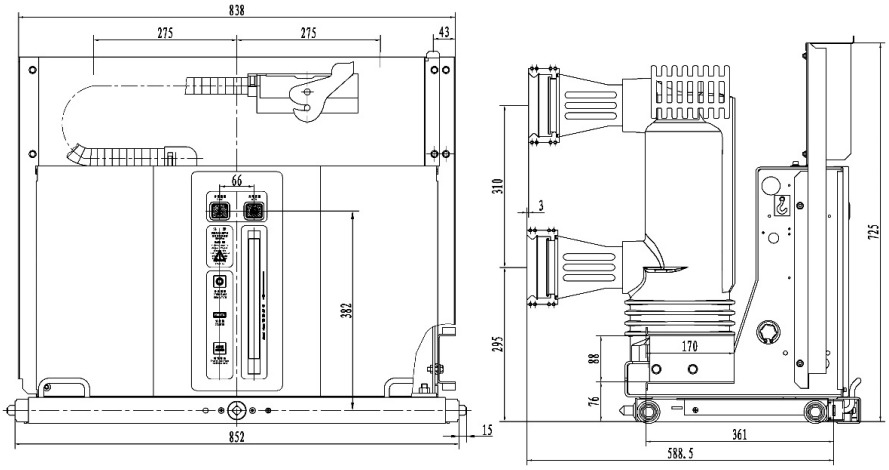

Rated current (A)	1600	2500	3150	4000
With the size of the static contact(mm)	Φ79	Φ109	Φ109	Φ109

6.4 Fixed type circuit breaker (phase distance 150 mm) outline drawings:

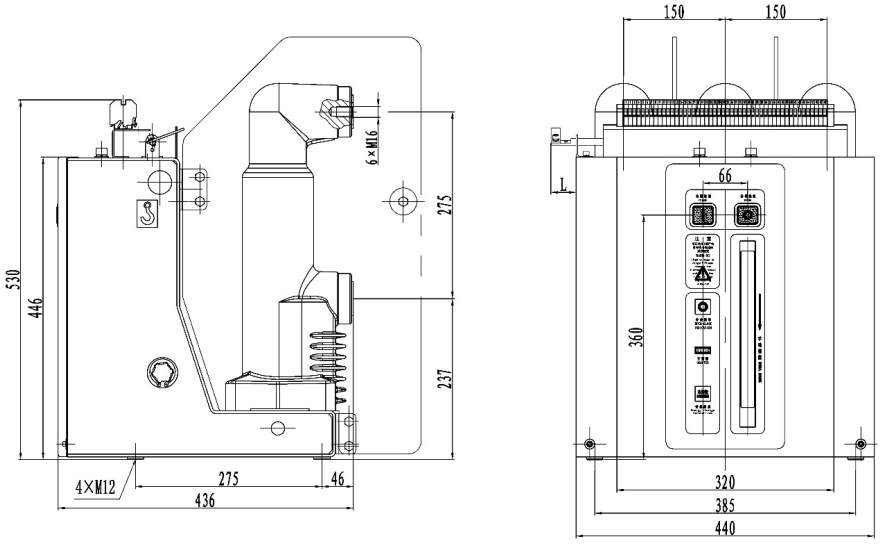

VTG-12 Indoor Solid-Sealed Medium-voltage AC Vacuum Circuit Breaker

6.5 Fixed type circuit breaker (phase distance 210 mm) outline drawings:

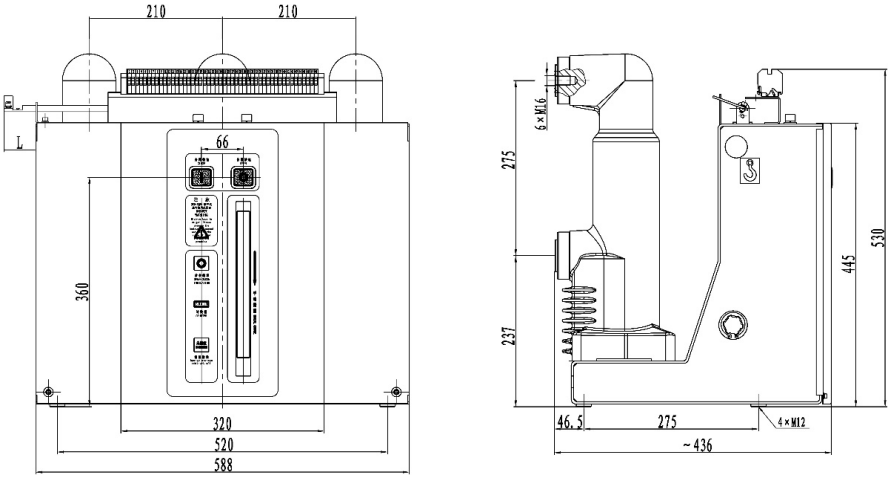

Note: Mechanism top interlock L=50mm (there are left or right extended interlock; the length can be customized according to the customer requirements)

6.6 Fixed type circuit breaker (phase distance 275 mm) outline drawings:

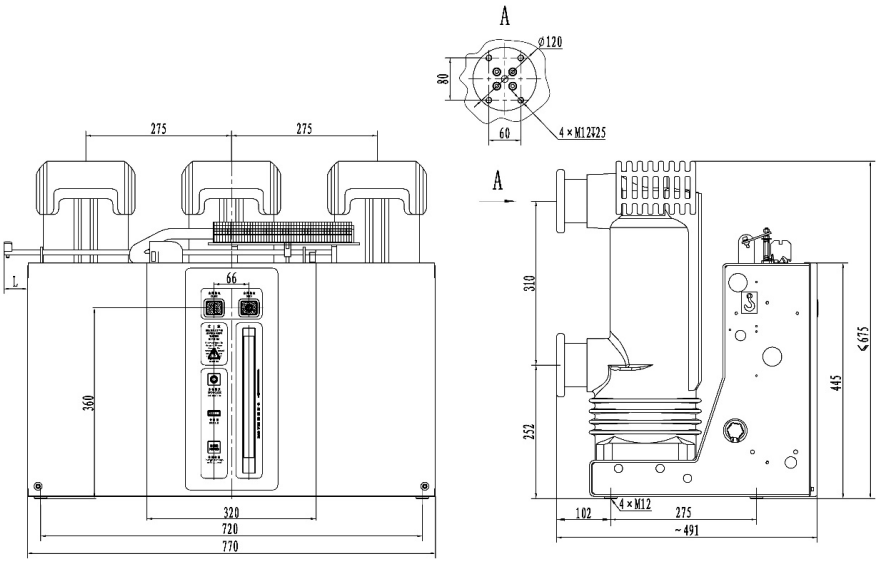

Note: Mechanism top interlock L=50mm (there are left or right extended interlock; the length can be customized according to the customer requirements)

VTG-12 Indoor Solid-Sealed Medium-voltage AC Vacuum Circuit Breaker

7 Electrical Diagram

7.1 Handcart type

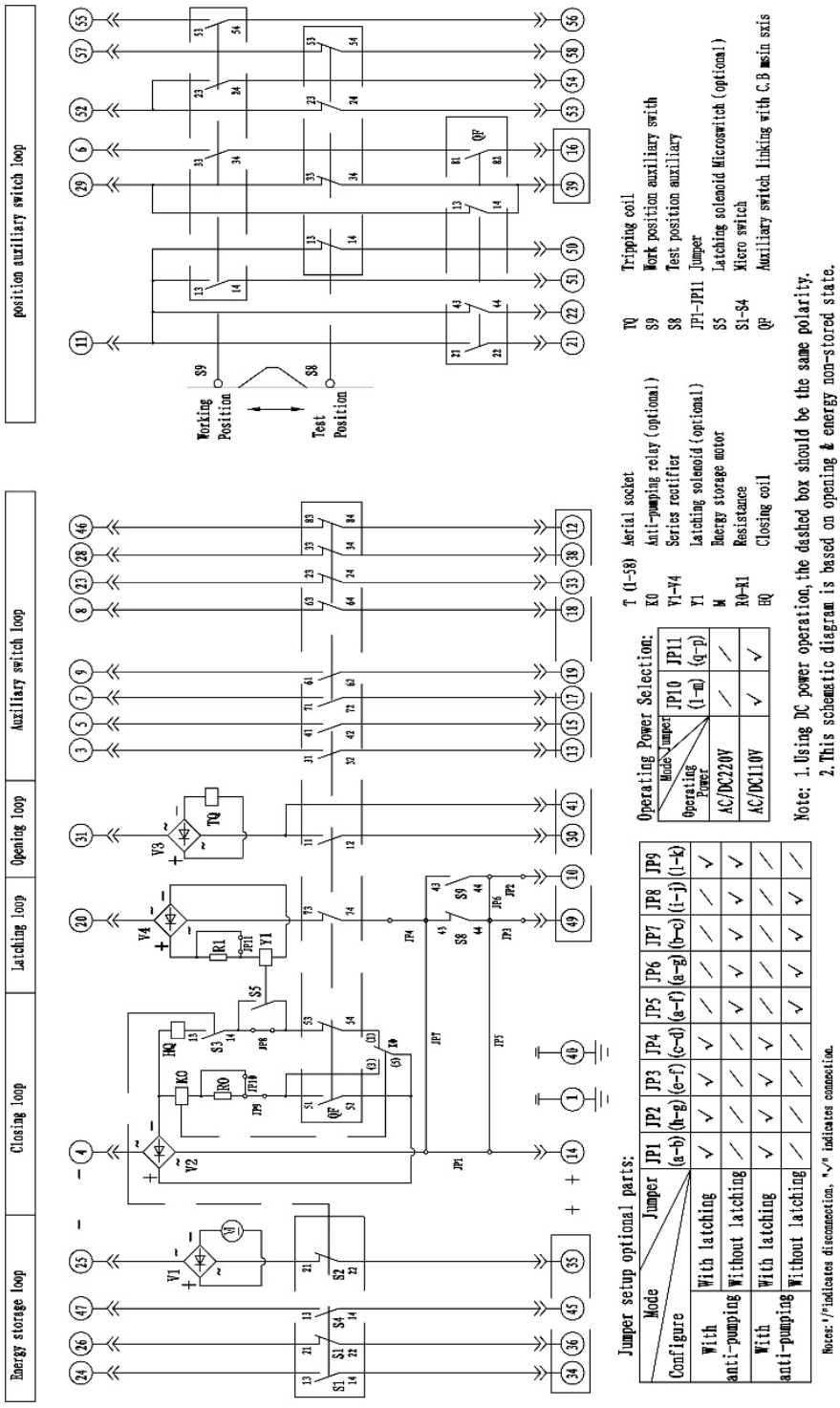

VTG-12 Indoor Solid-Sealed Medium-voltage AC Vacuum Circuit Breaker

7.2 Fixed type

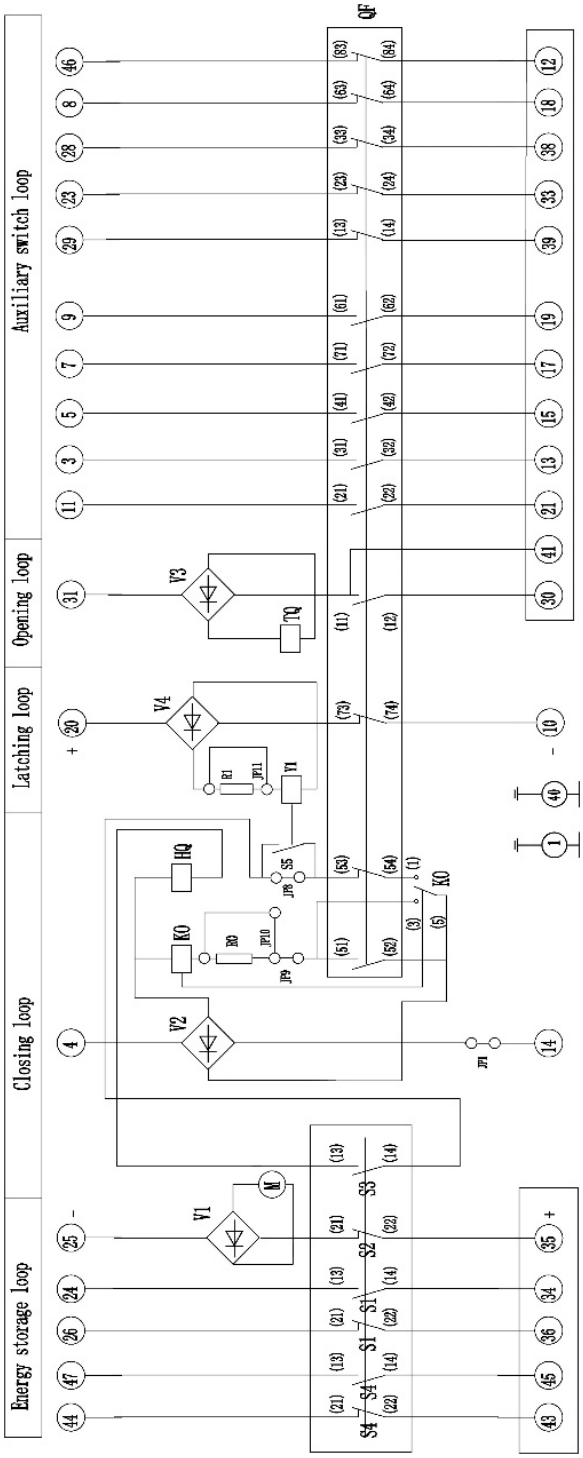

HQ:Closing coil

S1～4:Micro switch

TQ:Tripping coil

SS:Latching solenoid Microswitch (optional)

M:Energy storage motor

QF:Auxiliary switch linking with C.B main axis

R0-R1:Resistance

V1:Latching solenoid (optional)

V1-V4:Series rectifier

KO:Anti-pumping relay (optional)

JP8-JP11:Jumper

Operating Power Selection:

Operating Power \ Mode \ Jumper	JP10 (l-m)	JP11 (q-p)
AC/DC220V	/	/
AC/DC110V	√	√

Note: 1. Using DC power operation, the dashed box should be the same polarity.
2. This schematic diagram is based on opening & energy non-stored state.

Jumper setup optional parts:

Configure \ Mode \ Jumper		JP1 (a-b)	JP2 (h-g)	JP3 (e-f)	JP4 (c-d)	JP5 (a-f)	JP6 (a-g)	JP7 (b-c)	JP8 (i-j)	JP9 (l-k)
With anti-pumping	With latching	√	/	/	/	/	/	/	/	√
	Without latching	√	/	/	/	/	/	/	√	√
With anti-pumping	With latching	√	/	/	/	/	/	/	/	/
	Without latching	√	/	/	/	/	/	/	√	/

Notes: "/" indicates disconnection, "√" indicates connection.

VTG-12 Indoor Solid-Sealed Medium-voltage AC Vacuum Circuit Breaker

8 Ordering Notice

Please specify the following contents when ordering:

8.1 Name, model, specification and order quantity of circuit breaker;

8.2 Rated voltage, rated current and rated short circuit breaking current of circuit breaker;

8.3 Name and type of the operating mechanism;

8.4 Name and quantity of spare parts and replacement parts;

Note: If the customer has other special requirements, they shall be specified when ordering.

VTG-24 Indoor Medium-voltage AC Vacuum Circuit Breaker

1 Overview

1.1 Voltage level: AC24kV, frequency 50Hz; max. rated current up to 4000A.
1.2 Used in the KYN28A-24(GZS1) mid-mounted handcart switchgear and XGN fixed switchgear.

2 Type Designation

V TG - 24 / T □ – □

- □ – □: Rated short circuit breaking current (kA)
- □: Rated current (A)
- T: Spring operating mechanism
- 24: Rated voltage (kV)
- TG: Enterprise code
- V: Vacuum circuit breaker

3 Working Environment Conditions

3.1 Ambient temperature: The upper limit is +40°C, and the lower limit is -15°C (-30°C storage and transportation conditions allowed)

3.2 Relative humidity: The mean daily relative humidity is ≤95%, and the mean monthly relative humidity is ≤90%.

3.3 The mean daily vapor pressure is 2.2×10^{-3} MPa, and the mean monthly vapor pressure is 1.8×10^{-3} MPa.

3.4 The altitude does not exceed 1000 m.

3.5 The seismic intensity does not exceed 8 degrees.

Installed in places where there shall be no fire, explosion hazards, serious pollution, chemical corrosion and severe vibration.

4 Technical Parameters

No.	Item	Unit	Value
1	Rated voltage	kV	24
2	Rated power frequency withstand voltage (1 min)	kV	65
3	Rated lightning impulse withstand voltage (peak)	kV	125
4	Rated frequency	Hz	50
5	Rated short circuit duration time	s	4
6	Rated closing and opening operating voltage	V	AC/DC220 AC/DC110
7	Closing time	ms	30~70
8	Opening time	ms	20~50
9	Contact closing bounce time	ms	≤2
10	Three-phase closing simultaneity	ms	≤2
11	Three-phase opening simultaneity	ms	≤2

VTG-24 Indoor Medium-voltage AC Vacuum Circuit Breaker

No.	Item	Unit	Value
12	Average opening speed (contact just opened by 6mm)	m/s	1.2~1.6
13	Average closing speed	m/s	0.6~1.0
14	Circuit breaker grade		E2, C2, M2

5 Selection Information

Model	Rated voltage (kV)	Rated current (A)	Rated short circuit breaking current (kA)	Rated short circuit making current (kA)	Rated short time withstand voltage (kV)	Rated peak withstand voltage (kV)	Phase distance (mm)	Interpole gap (mm)
ZN63A-24/T630-20	24	630	20	50	65	125	275	310
ZN63A-24/T630-25	24	630	25	63	65	125	275	310
ZN63A-24/T630-31.5	24	630	31.5	80	65	125	275	310
ZN63A-24/T1250-25	24	1250	25	63	65	125	275	310
ZN63A-24/T1250-31.5	24	1250	31.5	80	65	125	275	310
ZN63A-24/T1250-40	24	1250	40	100	65	125	275	310
ZN63A-24/T1600-31.5	24	1600	31.5	80	65	125	275	310
ZN63A-24/T1600-40	24	1600	40	100	65	125	275	310
ZN63A-24/T2000-31.5	24	2000	31.5	80	65	125	275	310
ZN63A-24/T2000-40	24	2000	40	100	65	125	275	310
ZN63A-24/T2500-31.5	24	2500	31.5	80	65	125	275	310
ZN63A-24/T2500-40	24	2500	40	100	65	125	275	310
ZN63A-24/T3150-31.5	24	3150	31.5	80	65	125	275	310
ZN63A-24/T3150-40	24	3150	40	100	65	125	275	310
ZN63A-24/T4000-31.5	24	4000	31.5	80	65	125	275	310
ZN63A-24/T4000-40	24	4000	40	100	65	125	275	310

VTG-24 Indoor Medium-voltage AC Vacuum Circuit Breaker

6 Outline and Installation Dimensions

6.1 Handcart type circuit breaker outline diagram:

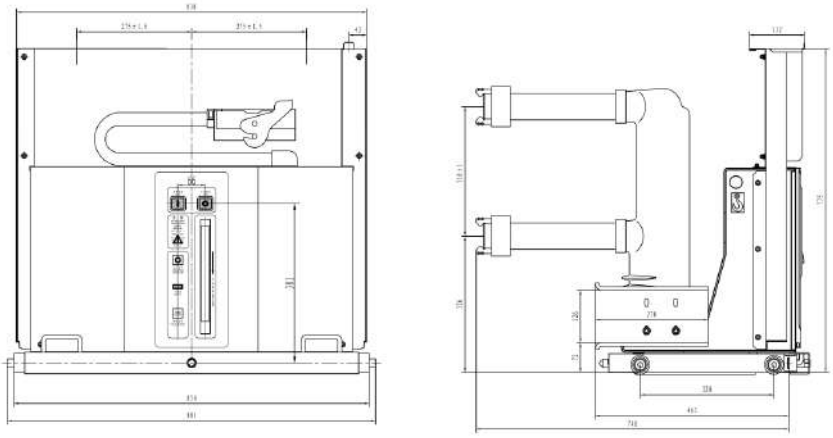

Rated current (A)	630	1250	1600
With the size of the static contact(mm)	Φ35	Φ49	Φ55

6.2 Handcart type circuit breaker outline diagram:

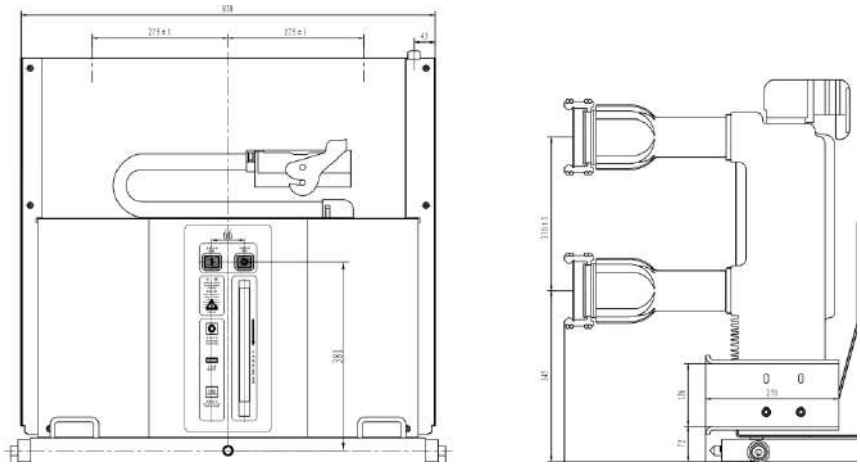

Rated current (A)	1600	2000	2500	3150	4000
With the size of the static contact(mm)	Φ79	Φ79	Φ109	Φ109	Φ109

VTG-24 Indoor Medium-voltage AC Vacuum Circuit Breaker

6.3 Fixed type circuit breaker outline diagram:

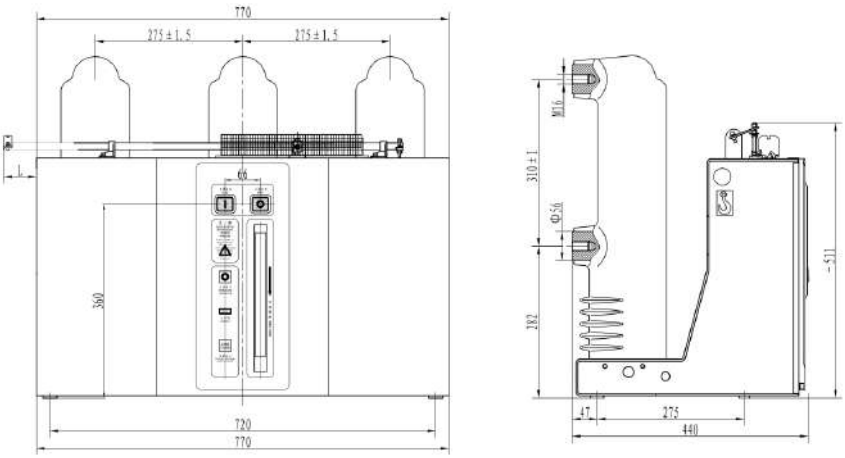

Note: The top interlock of the mechanism is L=50mm (there are left and right extended type interlocks, and the length can be customized according to the customer requirements)

6.4 Fixed type circuit breaker outline diagram:

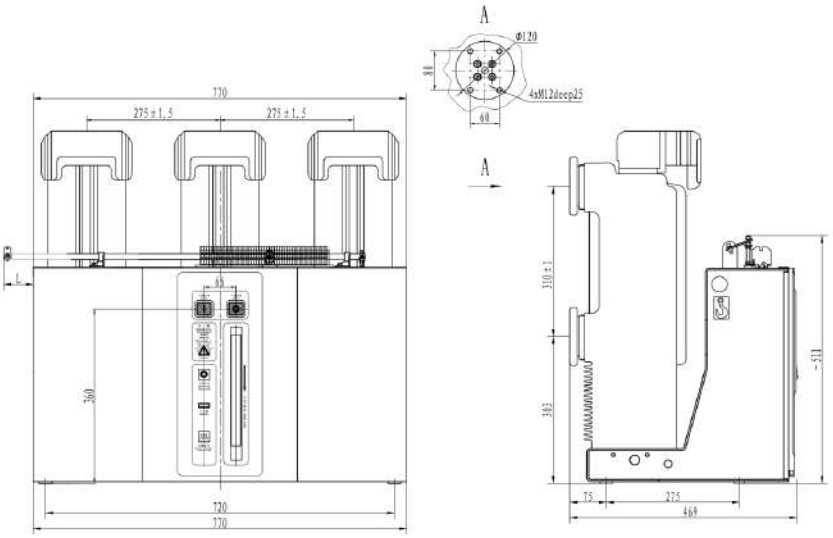

Note: The top interlock of the mechanism is L=50mm (there are left and right extended type interlocks, and the length can be customized according to the customer requirements)

VTG-24 Indoor Medium-voltage AC Vacuum Circuit Breaker

7 Electrical Diagram

7.1 Handcart type

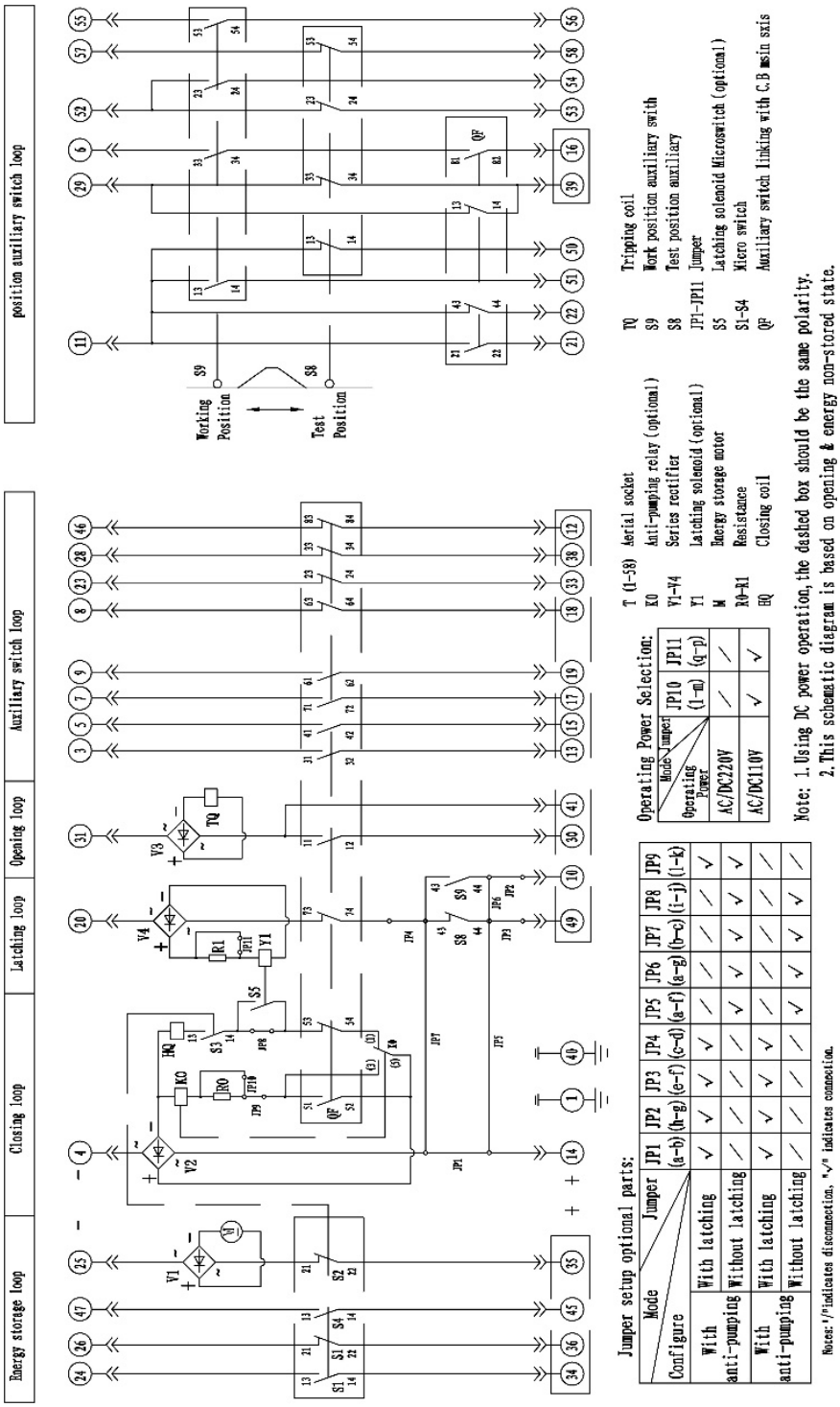

VTG-24 Indoor Medium-voltage AC Vacuum Circuit Breaker

7.2 Fixed type

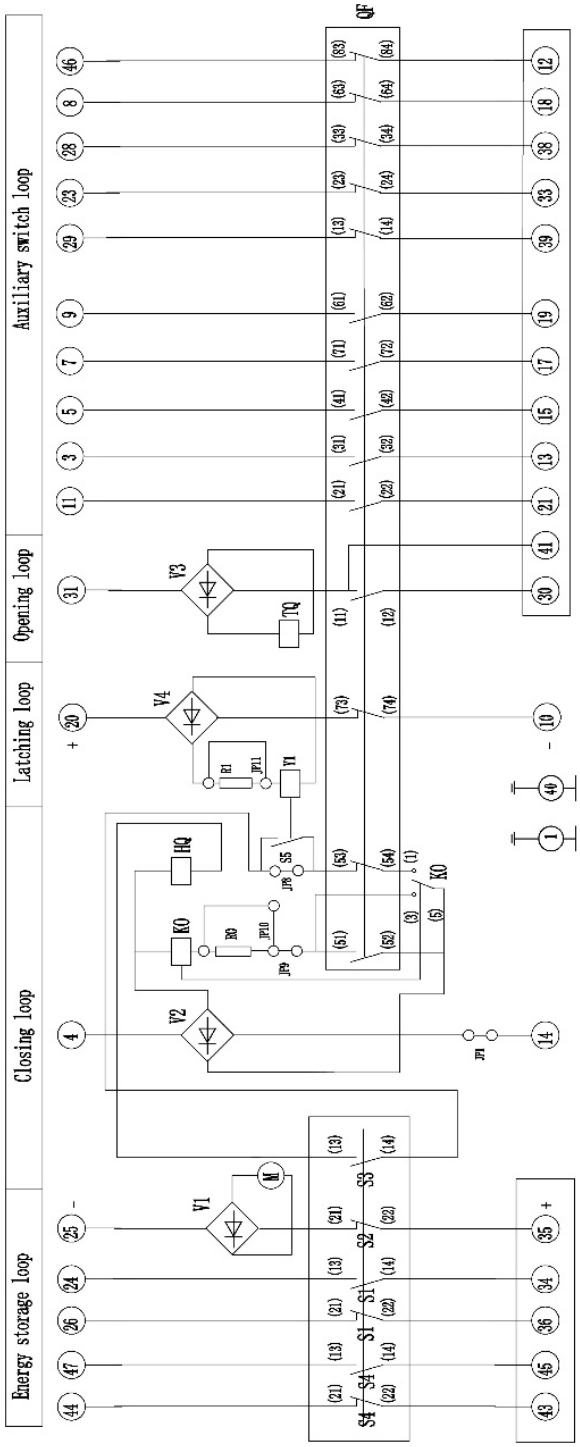

HQ:Closing coil

TQ:Tripping coil

M:Energy storage motor

R0-R1:Resistance

V1-V4:Series rectifier

JP8-JP11:Jumper

S1～4:Micro switch

SS:Latching solenoid Microswitch (optional)

QF:Auxiliary switch linking with C.B main axis

Y1:Latching solenoid (optional)

KO:Anti-pumping relay (optional)

Operating Power Selection:

Operating Power \ Mode Jumper	JP10 (1-m)	JP11 (q-p)
AC/DC220V	/	/
AC/DC110V	√	√

Note: 1. Using DC power operation, the dashed box should be the same polarity.
2. This schematic diagram is based on opening & energy non-stored state.

Jumper setup optional parts:

Configure \ Mode	Jumper	JP1 (a-b)	JP2 (b-g)	JP3 (e-f)	JP4 (c-d)	JP5 (a-f)	JP6 (a-g)	JP7 (b-c)	JP8 (i-j)	JP9 (l-k)
With anti-pumping	With latching	√	/	/	/	/	/	/	/	√
	Without latching	√	/	/	/	/	/	/	√	√
With anti-pumping	With latching	√	/	/	/	/	/	/	/	/
	Without latching	√	/	/	/	/	/	/	√	/

Notes: "/" indicates disconnection, "√" indicates connection.

VTG-24 Indoor Medium-voltage AC Vacuum Circuit Breaker

8 Ordering Notice

Please specify the following items when ordering:

8.1 Name, model, specification and order quantity of circuit breaker;

8.2 Rated voltage, rated current and rated short circuit breaking current of circuit breaker;

8.3 Name and type of operating mechanism;

8.4 Names and quantity of spare parts and components;

Note: Any special requirements of the customer shall be indicated when ordering.

ZW32-12(G)/T Outdoor Medium-voltage AC Vacuum Circuit Breaker

1 Overview

Three-phase AC 50Hz outdoor Medium voltage switchgear, used in the 10kV electrical power systems of rural power grid and urban power grid for opening and closing load current, overload current, and short circuit current, and in other similar applications.

2 Type Designation

Z W 32 - 12 (G) / T □ – □

- Rated short-circuit breaking current (kA)
- Rated current (A)
- Spring operating mechanism
- With isolating switch
- Rated voltage (kV)
- Design code
- Outdoors
- Vacuum circuit breaker

3 Technical Parameters

No.	Parameter Name			Unit	Value	
1	Rated voltage			kV	12	
2	Rated current			A	630, 1250	
3	Rated frequency			Hz	50	
4	Rated insulation level	Power frequency withstand voltage for 1 minute	Dry test	kV	P/phase to phase, P/phase to earth: 42 O/open contacts: 48	
			Wet test		34	
		Lighting impulse withstand voltage (peak)			P/phase to phase, P/phase to earth: 75 O/open contacts: 85	
5	Rated circuit-breaker breaking current			kA	20	25
6	Rated short-circuit making current (peak)			kA	50	63
7	Rated peak withstand current			kA	50	63
8	4s thermal stability current			kA	20	25
9	Rated operating sequence				O-0.3s-CO-180s-CO	
10	Closing time			ms	≤50	
11	Opening time				≤45	
12	Rated short-circuit breaking current ON/OFF times			Times	30	
13	Mechanical life				10,000	
14	Control circuit and auxiliary circuit, power frequency withstand voltage for 1 minute			V	2000	
15	Rated operating voltage and auxiliary voltage				AC/DC220、DC110/48/24	
16	Rated current of overcurrent trip coil			A	5	
17	Allowable wear thickness of dynamic and static contacts in arc extinguish chamber			mm	3	

ZW32-12(G)/T Outdoor Medium-voltage AC Vacuum Circuit Breaker

4 Operating Conditions

4.1 Ambient air temperature: Max. temperature: +55°C; Min. temperature: -40°C; Max. daily temperature difference: 25K;

4.2 Relative humidity: Daily mean is not greater than 95%, and monthly mean is not greater than 90%;

4.3 Altitude: Not exceed 2,000 meters;

4.4 Wind: Not exceed 35m/s (equivalent to air pressure 700Pa);

4.5 Pollution degree 4;

4.6 Radial thickness of ice: 10mm;

4.7 Earthquake resistance: horizontal acceleration: $0.3g/s^2$; vertical acceleration: $0.2g/s^2$;

4.8 Installed in places free of fire, explosion, chemical corrosion and frequent severe vibration.

Please contact the manufacturer for customizing those failed to follow the normal working conditions.

5 Features

5.1 The product mainly consists of three-phase pole, spring operating mechanism, drive system, conducting loop, control unit and housing (made of ordinary carbon steel spray or stainless steel). The overall structure is of the three-phase pole type with miniaturization design, full-closed structure and good sealing property, especially suitable for cold and wet areas;

5.2 The efficient and reliable spring operating mechanism (manual or electric; with manual functions or near-distance remote control for the electric type), featuring with low-power energy-storage motor and low opening and closing energy consumption. The operating mechanism is sealed in the box to effectively prevent rust to parts, guaranteeing the reliable action of mechanism;

5.3 The pole is made of imported epoxy resin and coated with silicone rubber featuring with high temperature, low temperature, ultraviolet ray and aging resistance;

5.4 An external two-phase or three-phase protective current transformer is provided to realize overcurrent protection and fault current quick-break protection together with inrush current, and the protection delay time can be adjustable;

5.5 The interphase protection CT and zero-sequence CT integrated structure can be configured to realize parameter setting, single-phase grounding protection, three-section protection, reclosing, and fault accident memory together with the intelligent controller (the external power supply PT is used to supply the operating power); the controller has the corresponding communication module with data uploading to master station, fault feedback and “four-remote” functions to form an intelligent circuit breaker achieving distribution network automation;

5.6 The circuit breaker can be equipped with an isolating knife switch (at single or dual sides) with three-phase linkage to form an obvious isolating distance at the incoming (outgoing) side; a reliable mechanical anti-misoperation interlock is provided between the main switch and the isolating switch to guarantee safe and reliable operation.

6 Outline and Installation Dimensions

6.1 ZW32-12/T Circuit breaker outline drawing (conventional type with CT)

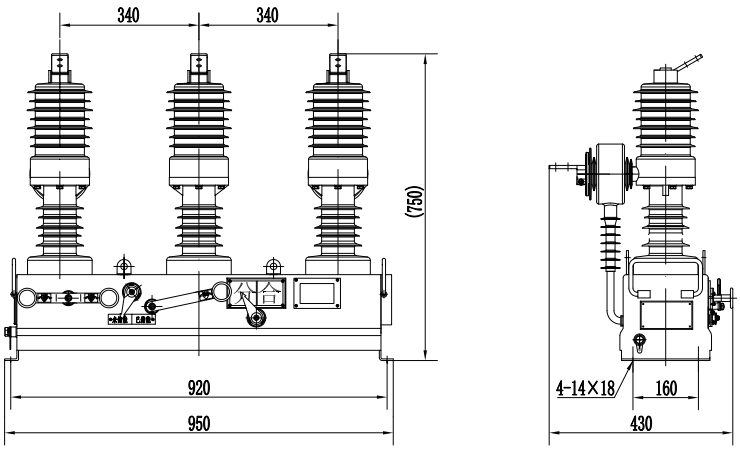

ZW32-12(G)/T Outdoor Medium-voltage AC Vacuum Circuit Breaker

6.2 ZW32-12G/T Circuit breaker outline drawing (conventional type with CT)

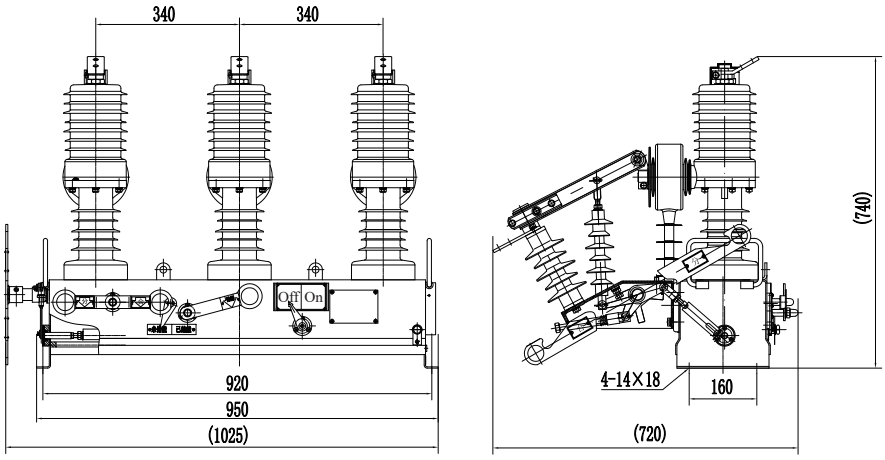

6.3 ZW32F-12/T Circuit breaker outline drawing (intelligent type)

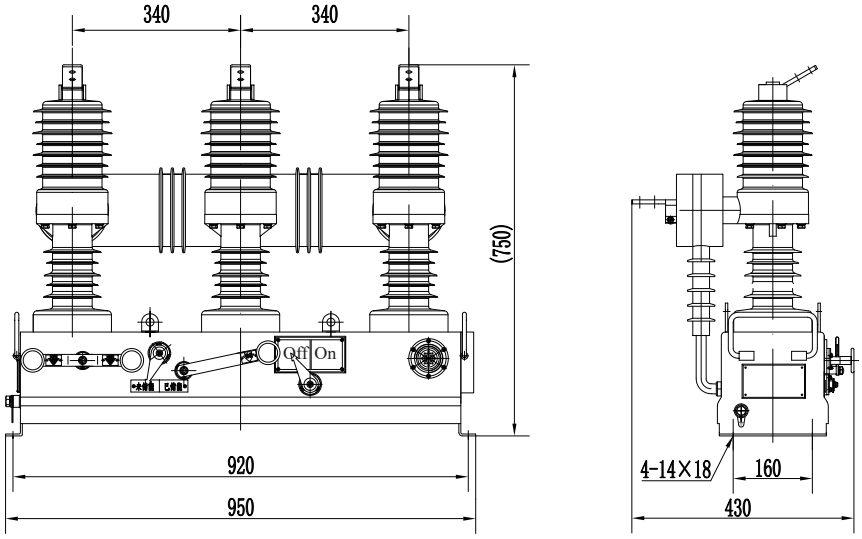

ZW32-12(G)/T Outdoor Medium-voltage AC Vacuum Circuit Breaker

6.4 ZW32F-12G/T Circuit breaker outline drawing (intelligent type)

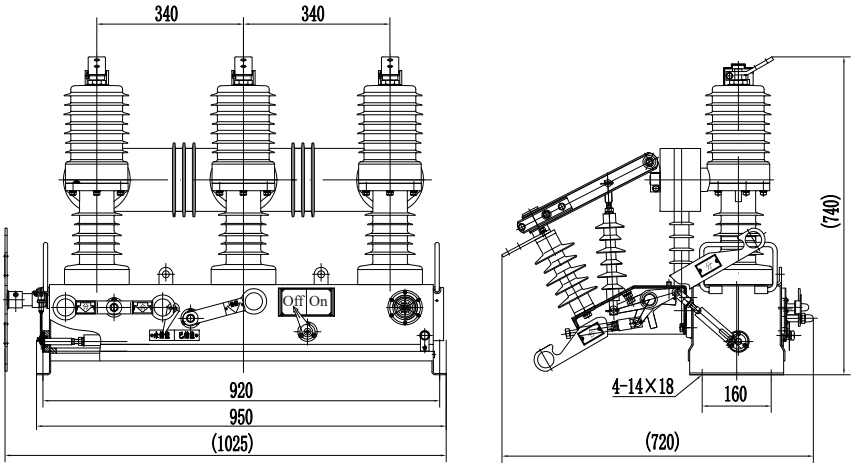

6.5 ZW32F-12/T Circuit breaker installation diagram (intelligent box-type)

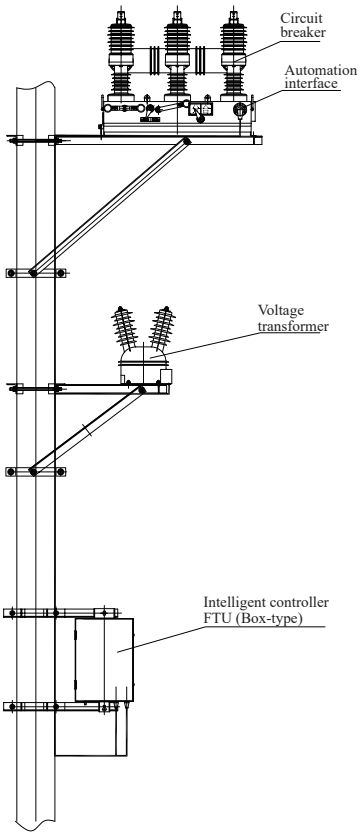

ZW32-12(G)/T Outdoor Medium-voltage AC Vacuum Circuit Breaker

6.6 ZW32F-12/T Circuit breaker installation diagram (intelligent cover-type)

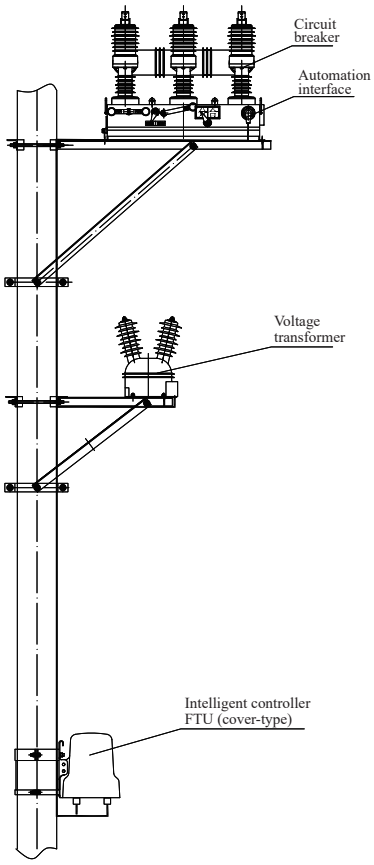

7 Ordering Notice

7.1 Product model, name, specification, and quantity;

7.2 Rated current, rated short-circuit breaking current;

7.3 Pole type (split type, integrated type or solid-sealed type);

7.4 Three-phase or two-phase current transformer transformation ratio, accuracy and capacity;

7.5 Zero-sequence transformer (independent or combined) transformation ratio, accuracy and capacity;

7.6 Operating mechanism type (manual or electric) and operating voltage;

7.7 Configuration requirements of voltage transformer (quantity, transformation ratio, accuracy and capacity);

7.8 Configuration requirements of controller (structure type, functions, and interfaces);

7.9 Names and quantity of accessories or spare parts;

7.10 For special requirements, please contact our company and sign the technical agreement.

ZW32-12(G)/T Outdoor Medium-voltage AC Vacuum Circuit Breaker

8 Ordering Technical Confirmation Form

Technical Confirmation Form for Ordering ZW32-12(G)/T Outdoor Medium-voltage AC Vacuum Circuit Breaker

Determine your requirements according to the items listed in table below:

Current grade	Rated current (A): □630 □1250	
	Rated short-circuit breaking current (kA): □20 □25	
Qty. (pcs)		
Pole type	□Split type (standard configuration) □Solid-sealed typ □Integrated type	
Phase distancing	□340mm (Standard configuration)	
Housing requirement	□Carbon steel spray □Stainless steel polishing (standard configuration) □Others___	
Operating mechanism and operating voltage	Electric spring mechanism: □AC/DC220V(standard configuration) □DC220V □Others:_____	
Isolating knife switch requirements	□No (standard configuration) □With single-side isolation □With dual-side isolation	
Zero-sequence transformer (not required for common type)	□20/1(Standard configuration) □Combined □Others:_____	
Configuration requirements for current transformer	□No □Two-phase (standard configuration) □Three-phase	
	□Standard configuration: 200-400-600/5, accuracy: Grade 10P; connected to:___/5 before shipment; □Others:_____	
Configuration requirements for voltage transformer	□No (standard configuration) □Single-side PT □Dual-side PT	
	□Transformation ratio 10/0.22kV; capacity 300VA; □Others:_____	
Controller requirements (without controller for standard configuration)	Cover-type:□Common type □Intelligent type (with GPRS) Box-type: □Common type □Intelligent type (with GPRS) Others: _____	
Mounting bracket requirements	□No (standard configuration) □With single-pole bracket (hot dip galvanizing) □Others:_____	
Other special requirements		Ordering unit (seal) Sign: _____ Confirmation date:_____ Tel: _____

Note: If not ticked, all options shall be manufactured according to the TENGEN's standard configurations.

ZW32-12(G)/M Outdoor Medium-voltage AC Permanent Magnet Vacuum Circuit Breaker

1 Overview

Three-phase AC 50Hz outdoor Medium voltage switchgear, used in the 10kV electrical power systems of rural power grid and urban power grid for opening and closing load current, overload current, and short circuit current, and in other similar applications.

2 Type Designation

Z W 32 - 12 (G) / M □ – □

- Rated short-circuit breaking current (kA)
- Rated current (A)
- Permanent magnet operating mechanism
- With isolating switch
- Rated voltage (kV)
- Design code
- Outdoor
- Vacuum circuit breaker

3 Technical Parameters

No.	Parameter Name			Unit	Value	
1	Rated voltage			kV	12	
2	Rated current			A	630、1250	
3	Rated frequency			Hz	50	
4	Rated insulation level	Power frequency withstand voltage for 1 minute	Dry test	kV	P/phase to phase, P/phase to earth: 42 O/open contacts: 48	
			Wet test		34	
		Lightning impulse withstand voltage (peak)			P/phase to phase, P/phase to earth 75 O/open contacts: 85	
5	Rated circuit-breaker breaking current			kA	20	25
6	Rated short-circuit making current (peak)			kA	50	63
7	Rated peak withstand current			kA	50	63
8	4s thermal stability current			kA	20	25
9	Rated operating sequence				O-0.3s-CO-180s-CO	
10	Closing time			ms	25~65	
11	Opening time				15~35	
12	Rated short-circuit breaking current ON/OFF times			Times	30	
13	Mechanical life				30,000	
14	Control circuit and auxiliary circuit, power frequency withstand voltage for 1 minute			V	2000	
15	Rated operating voltage and auxiliary voltage				DC220/110	
16	Rated current of overcurrent trip coil			A	5	
17	Allowable wear thickness of dynamic and static contacts in arc extinguish chamber			mm	3	

ZW32-12(G)/M Outdoor Medium-voltage AC Permanent Magnet Vacuum Circuit Breaker

4 Operating Conditions

4.1 Ambient air temperature: Max. temperature: +55°C; Min. temperature: -40°C; Max. daily temperature difference: 25K;

4.2 Relative humidity: Daily mean is not greater than 95%, and monthly mean is not greater than 90%;

4.3 Altitude: Not exceed 2,000 meters;

4.4 Wind: Not exceed 35m/s (equivalent to air pressure 700Pa);

4.5 Pollution degree 4;

4.6 Radial thickness of ice: 10mm;

4.7 Installed in places where there is no fire, explosion, chemical corrosion and frequent severe vibration.

When out of the normal working conditions, please contact the manufacturer.

5 Features

5.1 The product mainly consists of three-phase pole, spring operating mechanism, drive system, conducting loop, control unit and housing (made of ordinary carbon steel spray or stainless steel). The overall structure is of the three-phase pole type with miniaturization design, full-closed structure and good sealing property, especially suitable for cold and wet areas;

5.2 The efficient and reliable permanent magnet operating mechanism (electric OFF/ON; electric ON and manual OFF) or the dual mechanism of permanent magnet mechanism plus spring mechanism is used to realize manual ON function. The operating mechanism is sealed in the box to effectively prevent rust to parts, guaranteeing the reliable action of mechanism;

5.3 The pole is made of imported epoxy resin and coated with silicone rubber featuring with high temperature, low temperature, ultraviolet ray and aging resistance;

5.4 An external two-phase or three-phase protective current transformer is provided to realize overcurrent protection and fault current quick-break protection together with permanent magnet controller, and the protection delay time can be adjustable;

5.5 The interphase protection CT and zero-sequence CT integrated structure can be configured to realize parameter setting, single-phase grounding protection, three-section protection, reclosing, and fault accident memory together with the intelligent controller (the external power supply PT is used to supply the operating power); the controller has the corresponding communication module with data uploading to master station, fault feedback and “four-remote” functions to form an intelligent circuit breaker achieving distribution network automation;

5.6 The circuit breaker can be equipped with an isolating knife switch (at single or dual sides) with three-phase linkage to form an obvious isolating distance at the incoming (outgoing) side; a reliable mechanical anti-misoperation interlock is provided between the main switch and the isolating switch to guarantee safe and reliable operation.

6 Outline and Installation Dimensions

6.1 ZW32-12/M Circuit breaker outline drawing (conventional type with CT)

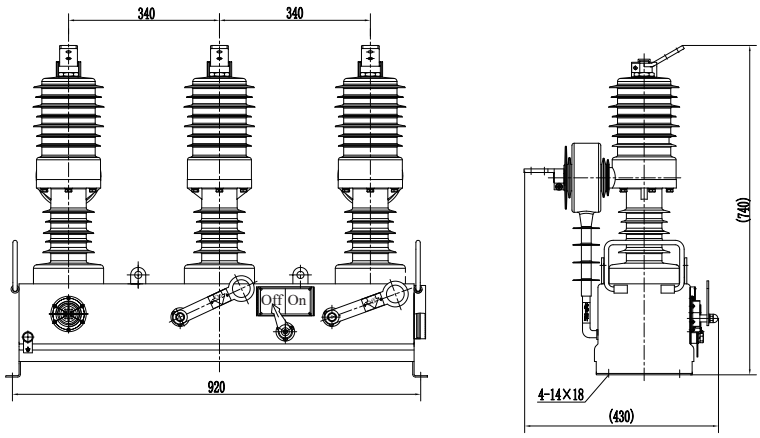

ZW32-12(G)/M Outdoor Medium-voltage AC Permanent Magnet Vacuum Circuit Breaker

6.2 ZW32-12G/M Circuit breaker outline drawing (conventional type with CT)

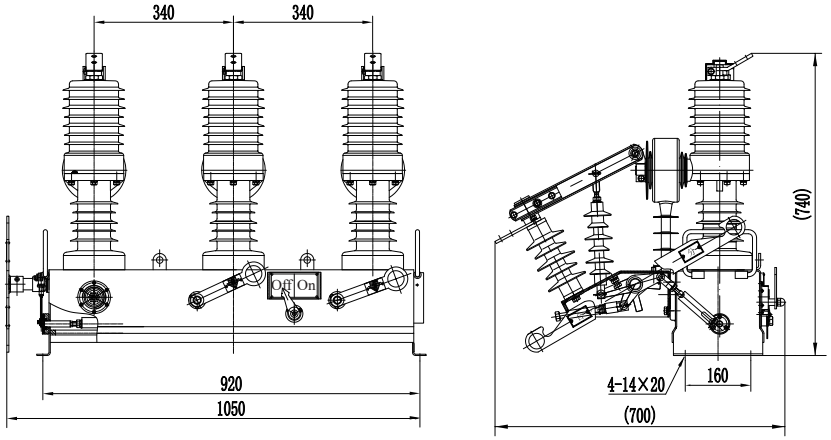

6.3 ZW32-12/M Circuit breaker outline drawing (intelligent type)

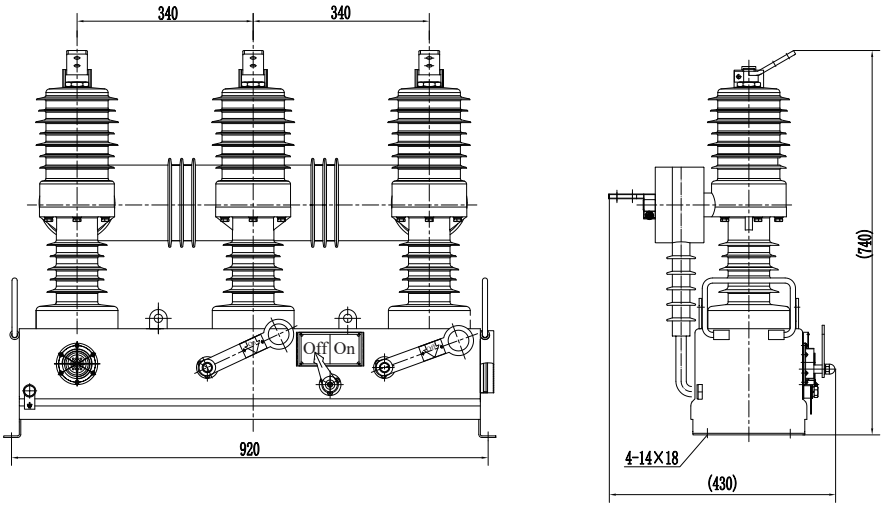

ZW32-12(G)/M Outdoor Medium-voltage AC Permanent Magnet Vacuum Circuit Breaker

6.4 ZW32-12G/M Circuit breaker outline drawing (intelligent type)

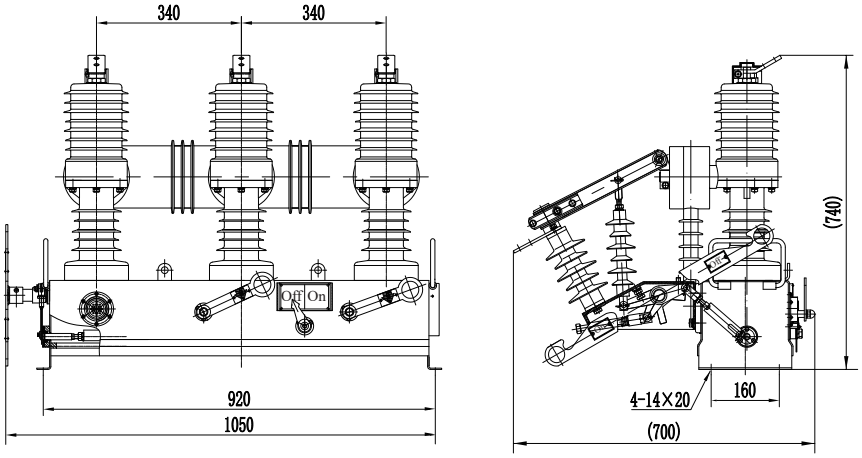

6.5 ZW32-12M Circuit breaker outline drawing (intelligent type)

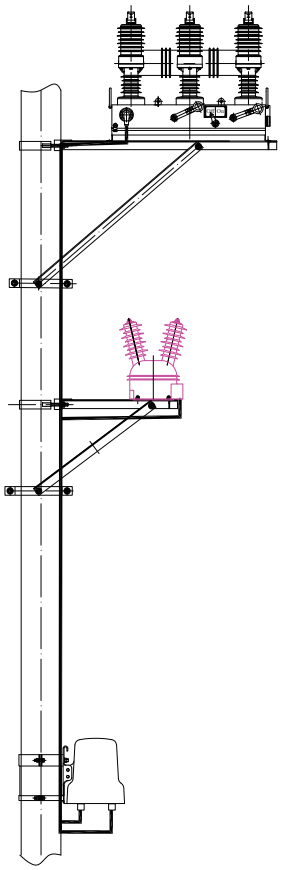

ZW32-12(G)/M Outdoor Medium-voltage AC Permanent Magnet Vacuum Circuit Breaker

7 Ordering Notice

7.1 Product model, name, specification, and quantity;

7.2 Rated current, rated short-circuit breaking current;

7.3 Pole type (split type, integrated type);

7.4 Three-phase or two-phase current transformer transformation ratio, accuracy and capacity;

7.5 Zero-sequence transformer (independent or combined) transformation ratio, accuracy and capacity;

7.6 Operating mechanism type (single or dual mechanism) and operating voltage;

7.7 Configuration requirements of voltage transformer (quantity, transformation ratio, accuracy and capacity);

7.8 Configuration requirements of controller (structure type, functions, and interfaces);

7.9 Names and quantity of accessories or spare parts;

7.10 For special requirements, please contact our company and sign the technical agreement.

ZW32-12(G)/M Outdoor Medium-voltage AC Permanent Magnet Vacuum Circuit Breaker

8 Ordering Technical Confirmation Form

ZW32(F)-12(G)/M outdoor vacuum circuit breaker order technical confirmation form

Determine your requirements according to the items listed in table below:

Current grade	Rated current (A): □630 □1250	
	Rated short-circuit breaking current (kA): □20 □25	
Qty. (pcs)		
Pole type	□Split type (standard configuration) □Solid-sealed typ □Integrated type	
Phase distancing	□340mm (Standard configuration)	
Housing requirement	□Carbon steel spray □Stainless steel polishing (standard configuration) □Others____	
Permanent magnet operating mechanism and operating voltage	□Monostable (Standard configuration) □Bistable stat □Permanent magnet (monostable) – spring dual mechanism	
	□DC220V □Others:_____	
Isolating knife switch requirements	□No (standard configuration) □With single-side isolation □With dual-side isolation	
Zero-sequence transformer (not required for common type)	□20/1(Standard configuration) □Combined □Others:_____	
Configuration requirements for current transformer	□No □Two-phase (standard configuration) □Three-phase	
	□Standard configuration: 200-400-600/5, accuracy: Grade 10P; connected to:____/5 before shipment; □Others:_____	
Configuration requirements for voltage transformer	□No (standard configuration) □Single-side PT □Dual-side PT	
	□Transformation ratio 10/0.22kV; capacity 300VA; □Others:_____	
Controller requirements	Cover-type: □Common type □Intelligent type (with GPRS) Box-type: □Common type □Intelligent type (with GPRS) Others: _____	
Mounting bracket requirements	□No (standard configuration) □With single-pole bracket (hot dip galvanizing) □Others:	
Other special requirements		Ordering unit (seal) Sign: _____ Confirmation date:_____ Tel:_____

Note: If not ticked, all options shall be manufactured according to the TENGEN's standard configurations.

ZW7-40.5 Outdoor Medium-voltage AC Vacuum Circuit Breaker

1 Overview

The three-phase AC 50Hz outdoor switchgear is suitable for 35kV power system used in urban network and rural network for making and breaking load current, overcurrent and short-circuit current, and for other similar applications.

2 Type Designation

Z W 7 – 40.5 / T □ – □

- Rated short-circuit breaking current (kA)
- Rated current (A)
- Spring operating mechanism
- Rated voltage (kV)
- Design code
- Outdoor
- Vacuum circuit breaker

3 Technical Parameters

No.	Name			Unit	Value		
1	Rated voltage			kV	40.5		
2	Rated current			A	1250, 1600		
3	Rated frequency			Hz	50		
4	Rated insulation level	1 minute power frequency withstand voltage	Dry test	kV	Phase to phase, phase to earth 95 open contacts 118		
			Wet test		80		
		Lighting impulse withstand voltage (peak)			Phase to phase, phase to earth 185 / open contacts 215		
5	Rated short-circuit breaking current			kA	20	25	31.5
6	Rated short-circuit making current (peak)			kA	50	63	80
7	Rated peak withstand current			kA	50	63	80
8	4s thermal stability current			kA	20	25	31.5
9	Rated operation sequence				O-0.3s-CO-180s-CO		
10	Closing time			ms	40~100		
11	Opening time				25~60		
12	Rated short circuit breaking current breaking times Times			Times	30		
13	Mechanical life				10000		
14	1 min power frequency withstand voltage of control circuit and auxiliary circuit			V	2000		
15	Rated operating voltage and auxiliary voltage				AC/DC220, DCI10		
16	Rated current of the overcurrent trip coil			A	5		
17	Allowable wear thickness of the moving and stationary contacts of arc extinguishing chamber			mm	3		

ZW7-40.5 Outdoor Medium-voltage AC Vacuum Circuit Breaker

4 Operating Conditions

4.1 Ambient air temperature: The maximum temperature is +55℃, the minimum temperature is -40℃, and the maximum daily temperature difference is 25K;

4.2 Relative humidity: The daily mean is not greater than 95%, and the monthly mean is not greater than 90%;

4.3 Altitude: ≤2,000 meters;

4.4 Wind speed: Not exceed 35m/s (equivalent to wind pressure 700 Pa);

4.5 Pollution degree: 3, 4;

4.6 Icing thickness: 10mm;

4.7 Installed in places where there is no fire, explosion, chemical corrosion and frequent severe vibration.

When out of the normal working conditions, please contact the manufacturer.

5 Structure And Working Principle

5.1 The overall structure is of the three-phase porcelain pillar type, and the product is primarily composed of a three-phase porcelain pillar, a spring operating mechanism and drive system, conductive circuit, control unit, and shell (common carton steel plastic-sprayed or stainless steel);

5.2 The vacuum interrupter is installed in a high-strength porcelain pillar, and high-strength insulation silicone is filled between the interrupter and the porcelain pillar, providing Medium voltage resistance, aging resistance, and excellent sealing capacity;

5.2 The reliable spring operating mechanism (manual or electric; with manual function available for electric mode) is used, the energy-storing motor has small power with low opening and closing energy consumption, and the operating mechanism is sealed in a box; there are temperature and humidity controllers and a heater with automatic switching function in the box to effectively prevent rust to the parts due to condensation, thus guaranteeing the reliability of the operations under the low temperature and at high-altitude areas;

5.3 The porcelain pillar is made of high-strength porcelain (epoxy glass tube coated with silicone rubber), featuring with high and low temperature resistance, resistance to ultraviolet, and aging resistance;

5.4 The internal (external) two-phase or three-phase current transformer (metering, measurement, and protection) works with the surge controller to realize overcurrent protection and fault current quick-off protection. The intelligent controller can be provided as required by user to realize the automatic control function.

5.6 There are side-mounted, central, CT internal or external modes according to the layout of operating mechanism for selection by user.

ZW7-40.5 Outdoor Medium-voltage AC Vacuum Circuit Breaker

6 Outline and Installation Dimensions

6.1 Outline and installation dimensions of circuit breaker (small middle-mounted type without CT)

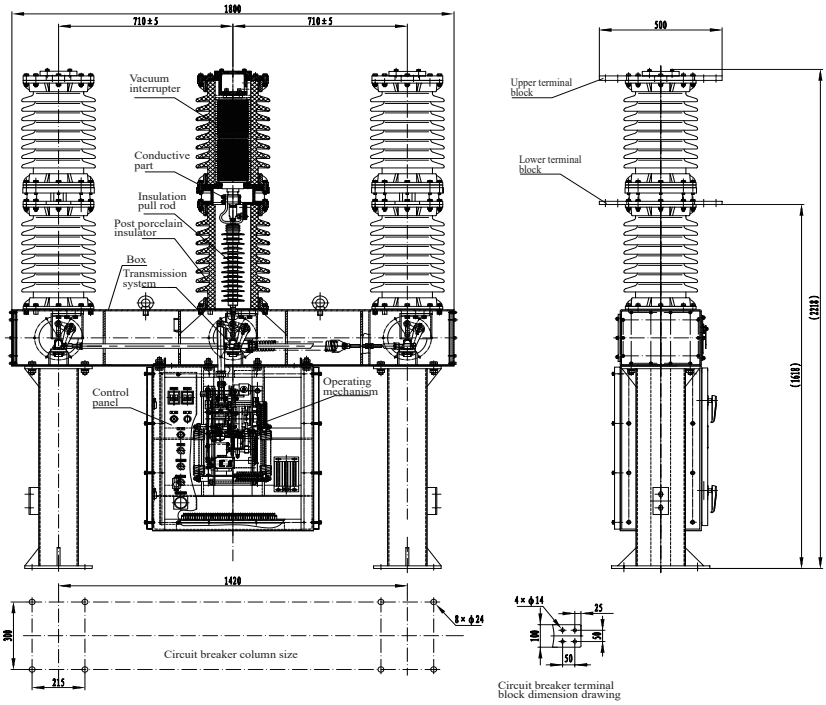

6.2 Circuit breaker outline and installation dimensions (small central type with CT)

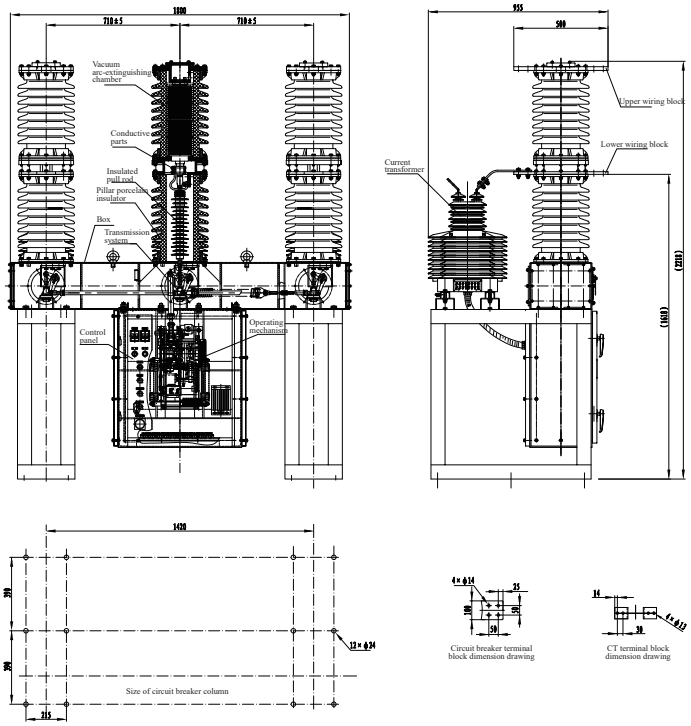

ZW7-40.5 Outdoor Medium-voltage AC Vacuum Circuit Breaker

6.3 Outline dimensions of ZW7-40.5 circuit breaker (general central-mounted type, and embedded CT)

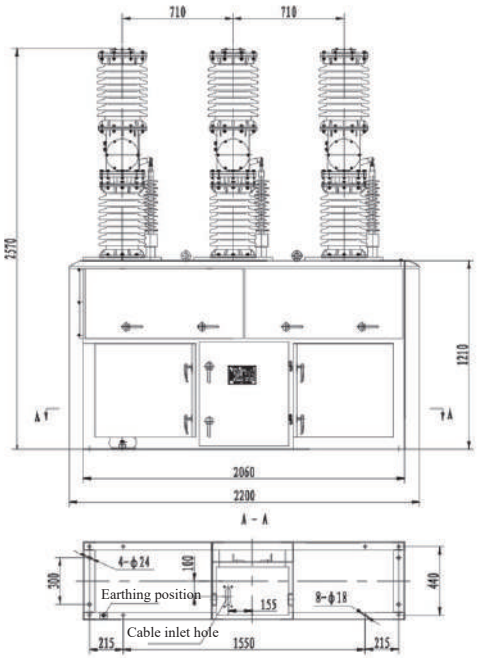

Drawing of circuit breaker base

Drawing of wiring terminal

6.4 Circuit breaker outline dimension diagram (general central-mounted type, with external CT)

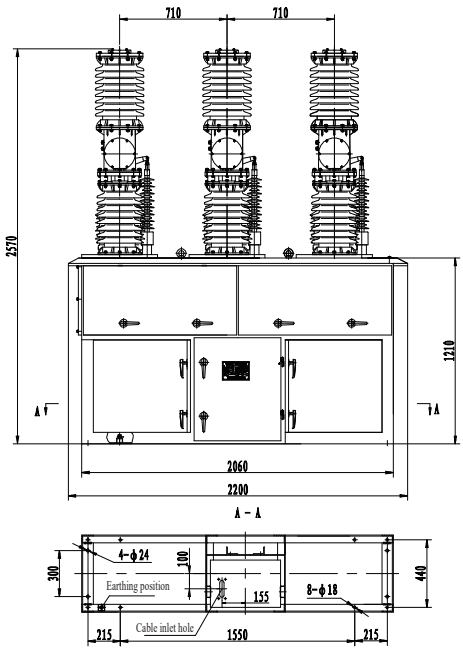

Circuit breaker base dimension drawing

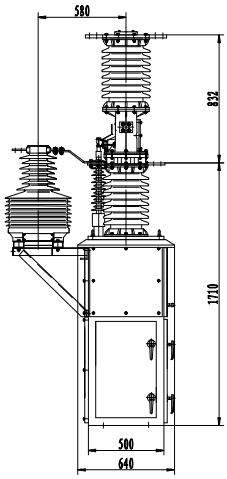

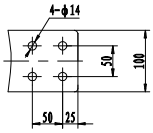

Circuit breaker terminal block dimension drawing

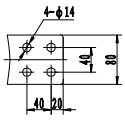

CT terminal block dimension drawing

ZW7-40.5 Outdoor Medium-voltage AC Vacuum Circuit Breaker

6.5 Dimensions drawings of circuit breaker (side-mounted, built-in CT)

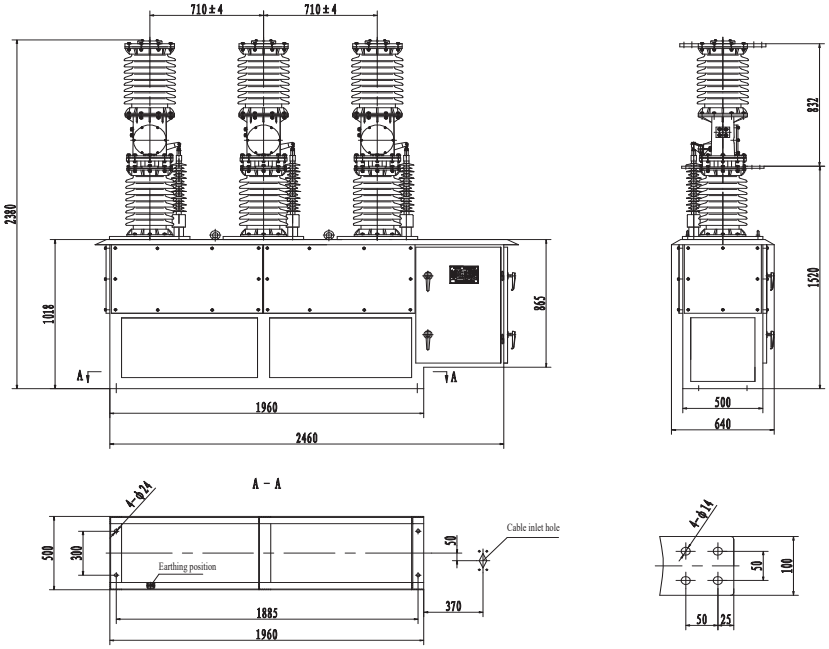

Circuit breaker base dimensions drawing

Dimensions drawings of terminal block of circuit breaker

6.6 Circuit breaker installation diagram (small central type without CT)

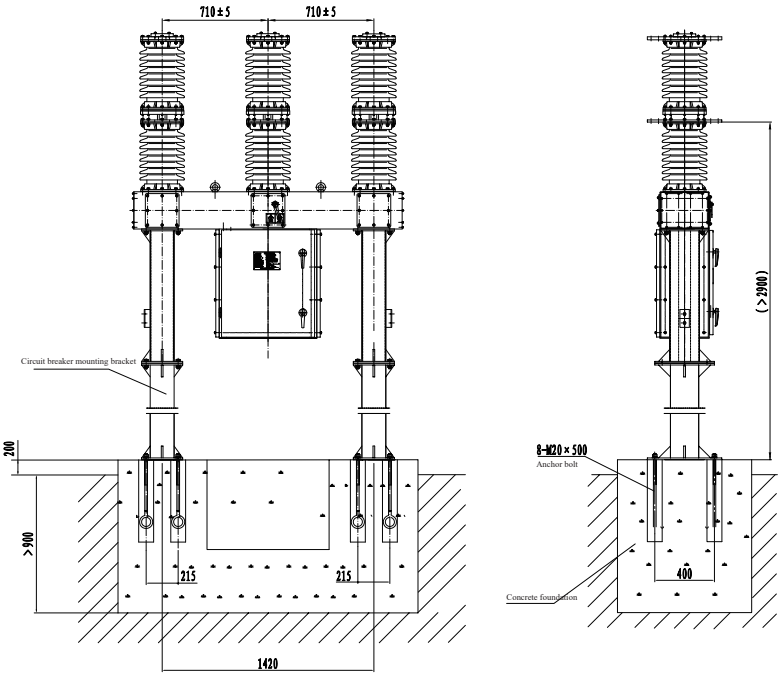

ZW7-40.5 Outdoor Medium-voltage AC Vacuum Circuit Breaker

6.7 Circuit breaker installation diagram (small central type with CT)

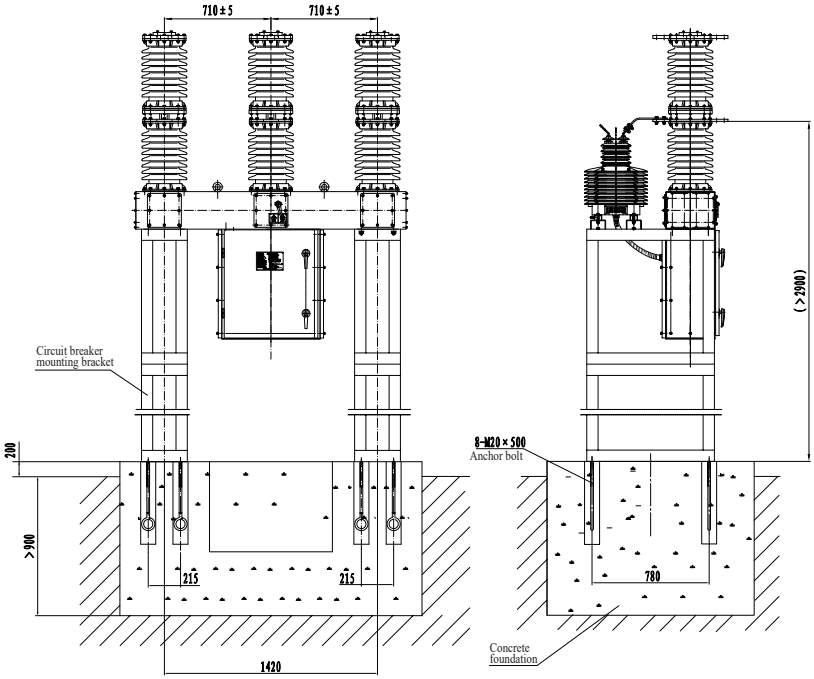

6.8 Circuit breaker installation diagram (general central-mounted type, built-in CT)

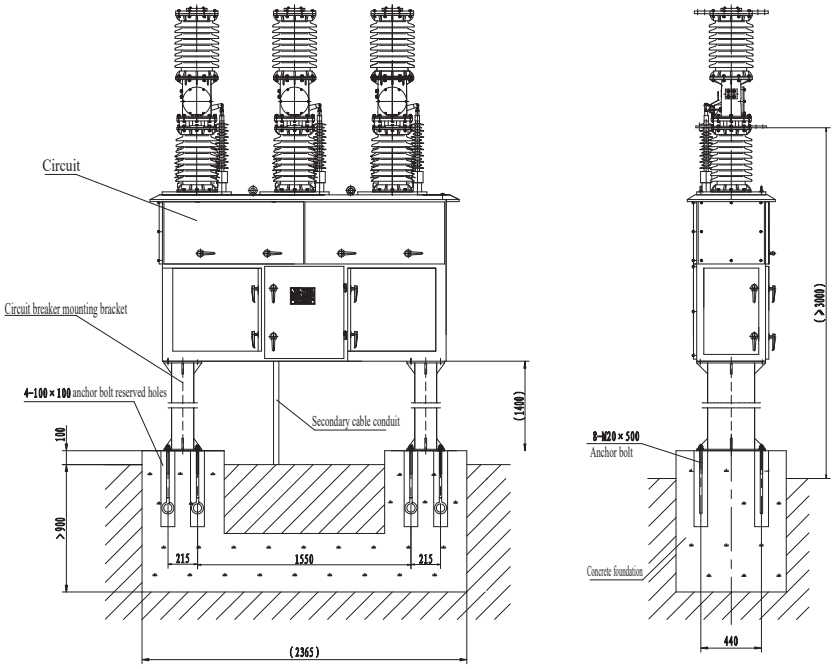

ZW7-40.5 Outdoor Medium-voltage AC Vacuum Circuit Breaker

6.9 ZW7-40.5 Circuit breaker installation diagram (general central-mounted type, external CT)

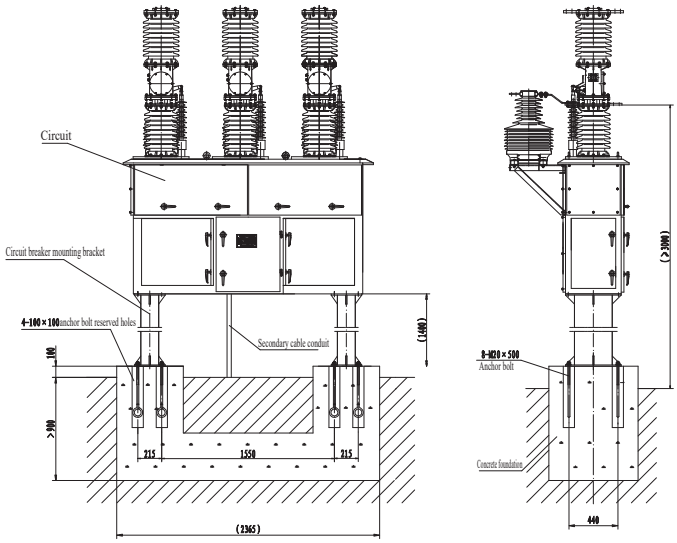

6.10 Circuit breaker installation diagram (side-mounted type, built-in CT)

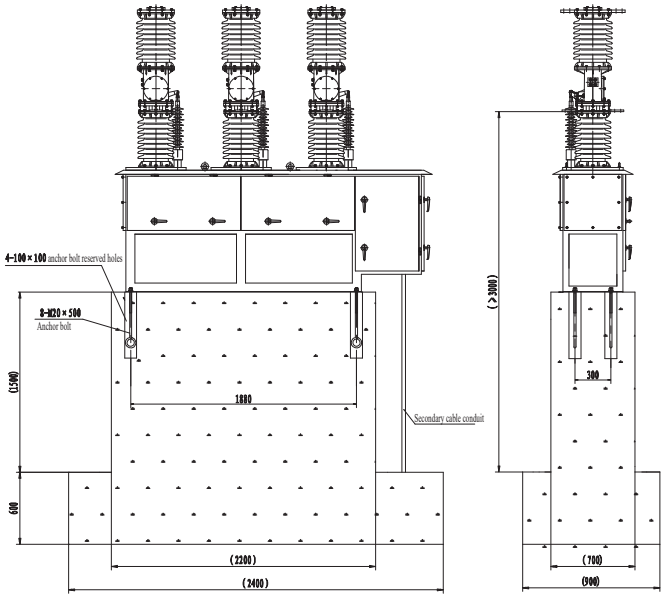

7 Ordering Notice

7.1 Product model, name, spec. and qty.

7.2 Structure type (side-mount type or central type or small type);

7.3 Rated current, rated short circuit breaking current;

7.4 Three-phase or two-phase current transformer and transformation ratio and accuracy;

7.5 Current transformer configuration mode (built-in or external)

7.6 Operating mechanism operating voltage;

7.6 Names and quantity of accessories or spare parts

7.7 For special requirements, please contact our company, and sign a technical agreement.

ZW7-40.5 Outdoor Medium-voltage AC Vacuum Circuit Breaker

8 Ordering Technical Confirmation Form

Technical Confirmation Form for Ordering ZW7-40.5 Outdoor Medium-voltage AC Vacuum Circuit Breaker

Please determine your requirements according to the items listed in table below:

Current	Rated current (A): □1250 □1600 □2000 Others:_____	
	Rated short-circuit breaking current (kA): □20 □25 □31.5	
Qty. (unit)		
Shell	□Stainless steel polishing (standard) □Carton steel plastic sprayed □Others: _____	
Outline structure	□Small central type □General central type □Side-mounted type	
Operating mechanism position and operating voltage	OFF, ON: □AC/DC220 (standard) □Others_____	
	Stored energy: □AC/DC220 (standard) □Others_____	
Configuration requirements for current transformer	□No □Two-phase (embedded External) Note: Two-phase embedded type is available as standard mode □Three-phase (embedded External)	
	□Standard: Ratio 200-400-600/5, Accuracy 0.2s/0.5/10P10/10P10 □Others: _____	
Altitude	□≤1500m (Standard) □Others:_____	
Pollution degree	□3 (standard) □ 4	
Controller requirements (No controller for standard configuraiton)	Shield-type: □Common type □Intelligent type (with GPRS) Box-type: □Common type □Intelligent type (with GPRS) Others:_____	
Mounting bracket	□No (standard configuration) □With bracket (including anchor bolts) Bracket height: Note: The surface of bracket is hot-galvanized, with standard height 1400mm.	
Other special requirements		Ordering unit (seal) Signature:_____ Confirmation date:_____ Tel:_____

Note: If not ticked, all options shall be manufactured according to TENGEN's standard configurations.

FN12-12(D)/T630-20 Indoor Medium-voltage Pressure-Operated Load Switch FN12-12R (D)/T125-31.5 Indoor Medium-voltage Pressure-Operated Load Switch – Fuse Combination Unit

1 Overview

1.1 Used in the 10kV and below three-phase power distribution system for control and protection of power equipment such as transformer, cables, and overhead lines, especially suitable for terminal substations and box-type substations used in urban network and rural network and for control and protection of ring network and dual radiant power supply unit.

1.2 FN12-12 (D) / T630-20 indoor pressure-operated load switch can turn on/off the load current.

1.3 FN12-12R (D) / T125-31.5 indoor pressure-operated load switch + fuse combination can turn on/off the load overcurrent, overload current, and line short circuit current.

2 Type Designation

F N 12 - 12 D / T 630 - 20

- 20 — Rated short-circuit breaking current (kA)
- 630 — Rated current (A)
- T — Spring mechanism
- D — With earth switch
- 12 — Rated voltage (kV)
- 12 — Design code
- N — Indoor
- F — Load switch

F N 12 - 12 R D / T 125 - 31.5

- 31.5 — Rated short-circuit breaking current (kA)
- 125 — Max. rated current of optional fuse (A)
- T — Spring mechanism
- D — With earth switch
- R — With fuse
- 12 — Rated voltage (kV)
- 12 — Design code
- N — Indoor
- F — Load switch

FN12-12(D)/T630-20 Indoor Medium-voltage Pressure-Operated Load Switch FN12-12R (D)/T125-31.5 Indoor Medium-voltage Pressure-Operated Load Switch – Fuse Combination Unit

3 Technical Parameters

No.	Parameter Name			Unit	FN12-12D	FN12-12RD
1	Rated voltage			kV	12	12
2	Rated frequency			Hz	50	50
3	Rated current			A	630	125
4	Rated insulation level	Power frequency withstand voltage for 1 minute	P/phase to earth, P/phase to phase	kV	42	42
			O/open contacts		48	48
		Lighting impulse withstand voltage (peak)	P/phase to earth, P/phase to phase		75	75
			O/open contacts		85	85
5	Rated circuit-breaker withstand current (thermal stability current)			kA	20	--
6	Rated short-circuit duration (thermal stability current)		Load switch	S	4	--
			Earth switch		2	
7	Rated short-circuit making current (peak)			kA	50	--
8	Rated breaking current		Active load breaking current	A	630	--
			Closed-loop breaking current		630	--
			5% active load breaking current		31.5	--
			Cable charge current		10	--
9	Breaking no-load transformer capacity			kVA	1250	--
10	Rated short-circuit breaking current (current-limiting fuse)			kA	--	31.5
11	Rated transfer current or take-over current			A	--	1200
12	Mechanical life			times	2,000	
13	Impactor output energy			J	--	2 ～ 5
14	Main circuit resistance			μΩ	≤120	≤300
15	Fuse model			--	--	XRNT□-12

4 Operating Conditions

4.1 Ambient temperature: Upper limit: +40°C; Lower limit: -15°C;

4.2 The altitude does not exceed 1,000 meters.

4.3 For relative air humidity, the daily mean is not greater than 95%, and the monthly mean is not greater than 90%;

4.4 The seismic intensity is below 8 magnitude scales.

4.5 Installed in places free of fire, explosive risk, chemical corrosion, and violent vibration.

4.6 The installation site shall be free of flammable substance, explosive risk, chemical corrosion and violent vibration.

Please contact the manufacturer for customizing those failed to follow the normal working conditions.

FN12-12(D)/T630-20 Indoor Medium-voltage Pressure-Operated Load Switch FN12-12R (D)/T125-31.5 Indoor Medium-voltage Pressure-Operated Load Switch – Fuse Combination Unit

5 Features

5.1 This series of product features with compact structure, reasonable design, reliable interlock, and high insulation level, and its opening and closing actions are realized in the vertical straight movement way; the spring energy-storage operating mechanism is used to ensure that the opening and closing speed is not affected by the operating force applied by the operator; the electric arc will be extinguished in the bell-shaped insulating hood, and free gas will not cause the reduction of the insulation between the phases or to the ground when arcing.

5.2 An organic transparent insulating hood is provided between the bell-shaped hood and the support (that is the switch isolating distance) to completely isolate the live body, thus improving the protection grade of ring main unit. A reliable mechanical interlock is provided between the load switch and the ground switch, and a mechanical interlock is also installed on the switch panel with the cabinet body. Those interlocks are simple and effective without mis-operation or unintended touched.

5.3 This series of products use arc contact made of copper-tungsten alloy allowing that the switch is reliably conductive and has a long electrical life with advantages of easy maintenance, convenient operation, and reliable operation.

6 Outline and Installation Dimensions

6.1 Load switch

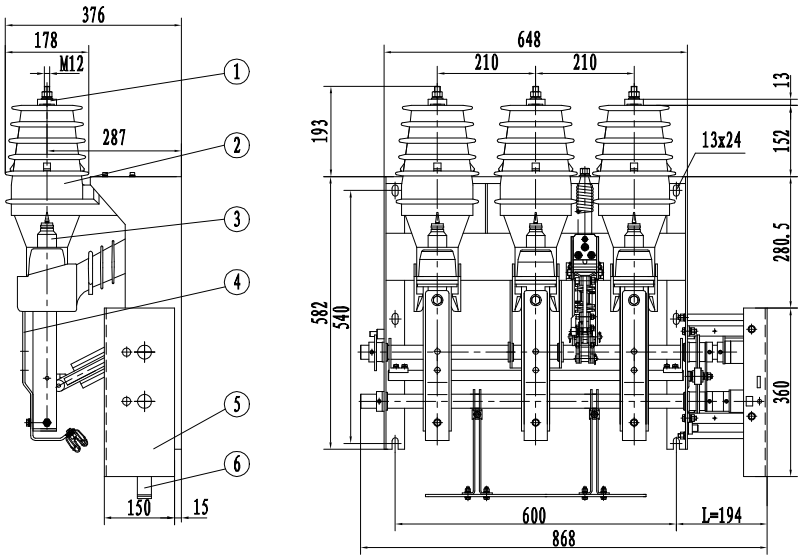

① Static outgoing base ③ Conducting bush ⑤ Operator panel
② Insulating hood ④ Conducting bar ⑥ Earth switch

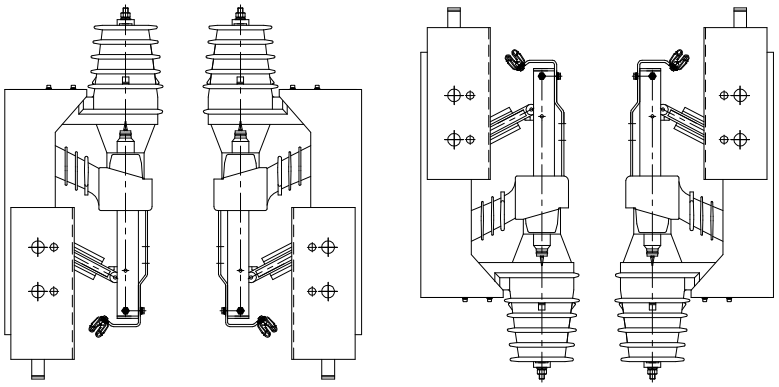

Front side mounted for left operation | Front side mounted for right operation | Reverse side mounted for left operation | Reverse side mounted for right operation

FN12-12(D)/T630-20 Indoor Medium-voltage Pressure-Operated Load Switch FN12-12R (D)/T125-31.5 Indoor Medium-voltage Pressure-Operated Load Switch – Fuse Combination Unit

6.2 Load switch – fuse-combination unit

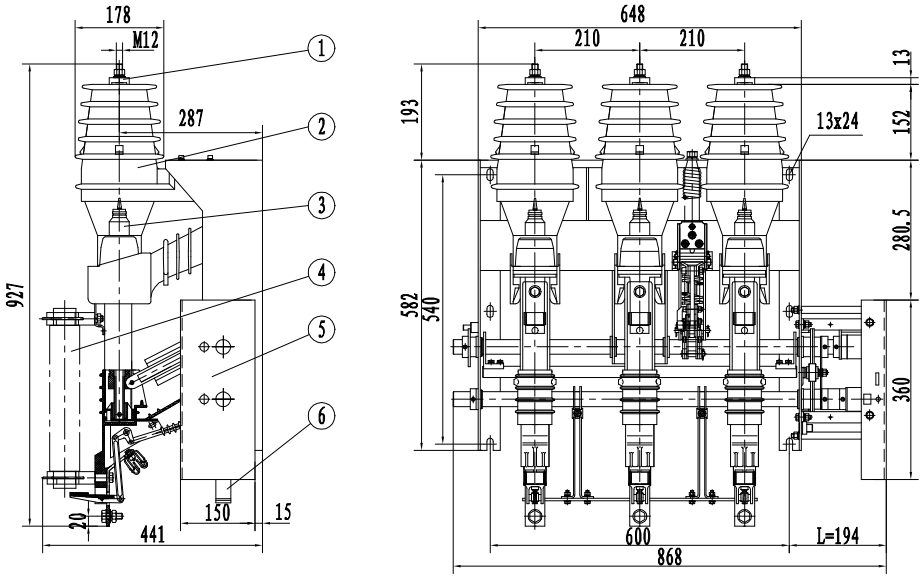

① Static outgoing base ③ Conducting bush ⑤ Operator panel

② Insulating hood ④ Fuse ⑥ Earth switch

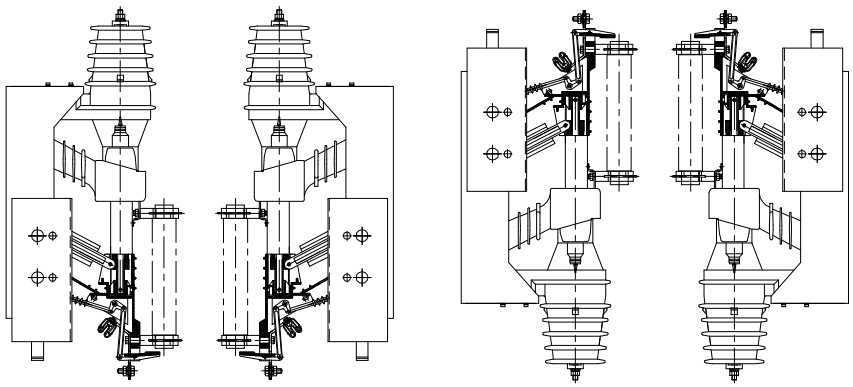

Front side mounted for left operation | Front side mounted for right operation | Reverse side mounted for left operation | Reverse side mounted for right operation

FN12-12(D)/T630-20 Indoor Medium-voltage Pressure-Operated Load Switch FN12-12R (D)/T125-31.5 Indoor Medium-voltage Pressure-Operated Load Switch – Fuse Combination Unit

6.3 Cabinet door opening and interlock installation diagram (front side mounted for right operation)

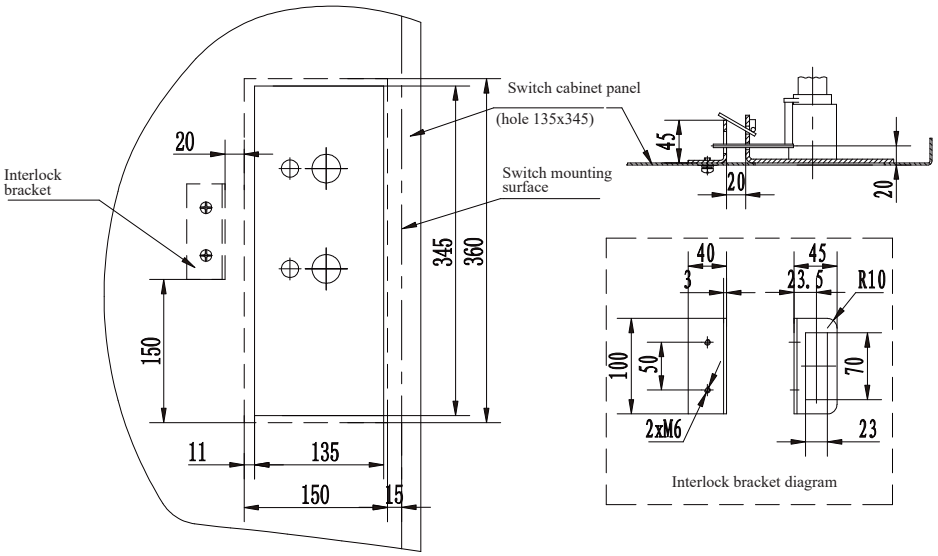

6.4 Diagram of holes on the baffle

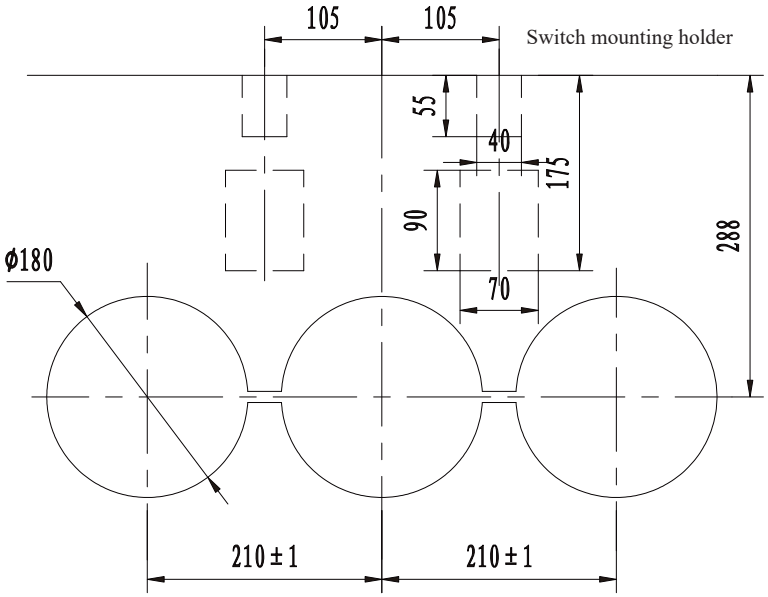

FN12-12(D)/T630-20 Indoor Medium-voltage Pressure-Operated Load Switch FN12-12R (D)/T125-31.5 Indoor Medium-voltage Pressure-Operated Load Switch – Fuse Combination Unit

7 Secondary Scheme Diagram

7.1 Electric type

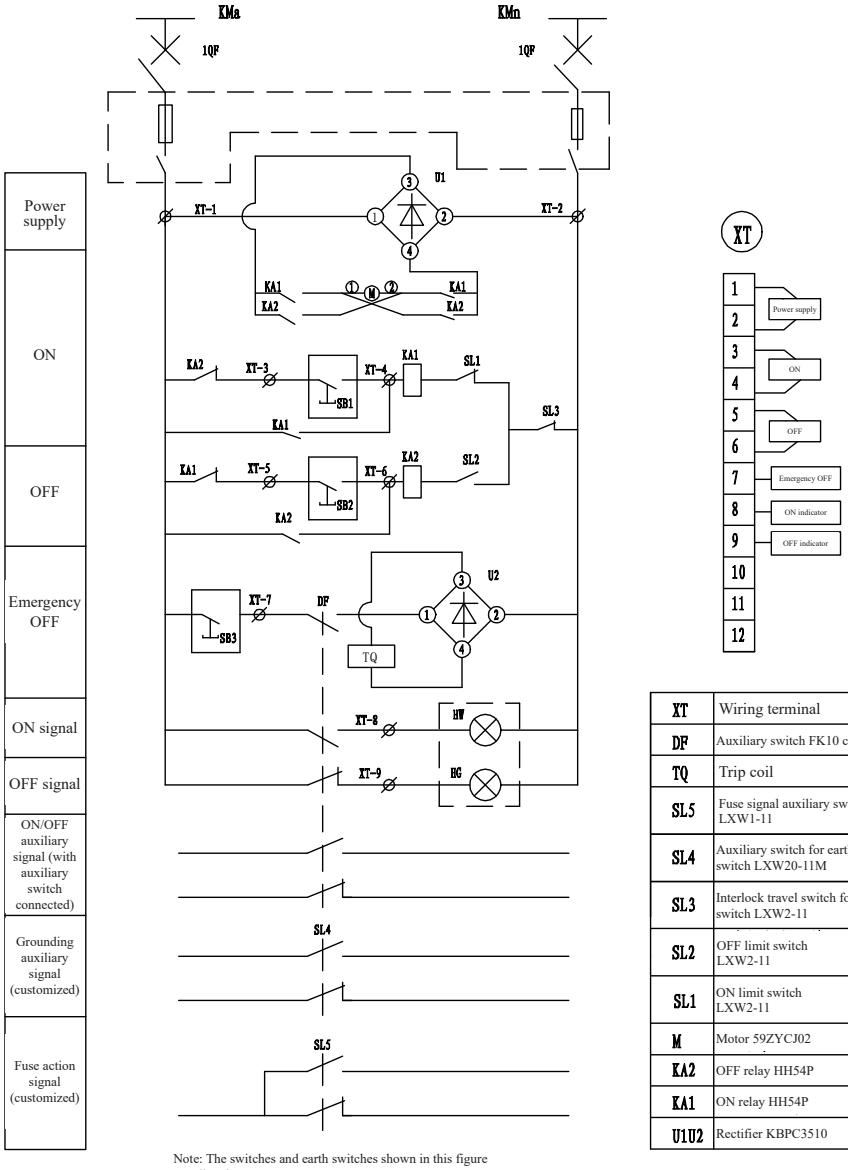

XT	Wiring terminal	1
DF	Auxiliary switch FK10 changed	1
TQ	Trip coil	1
SL5	Fuse signal auxiliary switch LXW1-11	1
SL4	Auxiliary switch for earth switch LXW20-11M	1
SL3	Interlock travel switch for earth switch LXW2-11	1
SL2	OFF limit switch LXW2-11	1
SL1	ON limit switch LXW2-11	1
M	Motor 59ZYCJ02	1
KA2	OFF relay HH54P	1
KA1	ON relay HH54P	1
U1U2	Rectifier KBPC3510	1

Note: The switches and earth switches shown in this figure are all at the OFF state.

FN12-12(D)/T630-20 Indoor Medium-voltage Pressure-Operated Load Switch FN12-12R (D)/T125-31.5 Indoor Medium-voltage Pressure-Operated Load Switch – Fuse Combination Unit

7.2 Manual type with shunt release

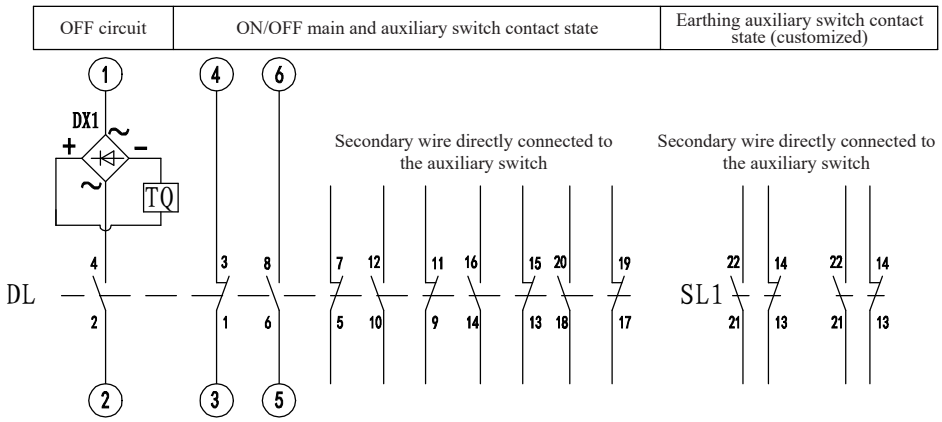

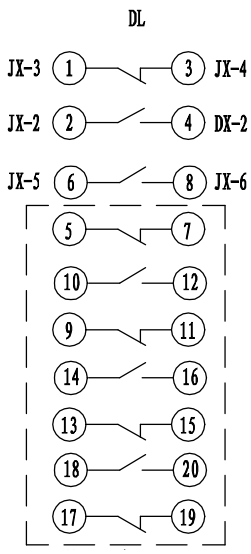

Reserved position for auxiliary switch

JX

1	DX-1
2	DL-2
3	DL-1
4	DL-3
5	DL-6
6	DL-8
7	
8	
9	
10	

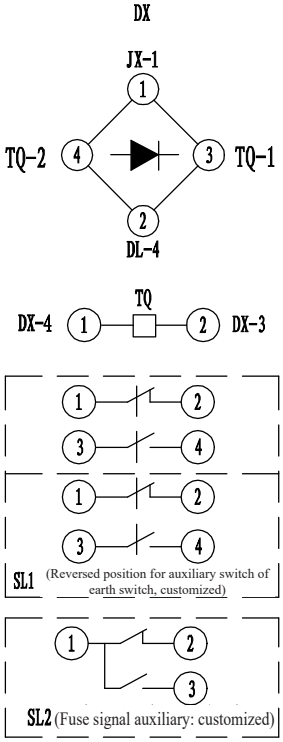

Symbol	Name	Symbol	Name
DL	Auxiliary switch	DX	Rectifier
JX	Wiring terminal block	TQ	OFF coil
SL1-SL2	Micro switch		

8 Ordering Technical Confirmation Form

FN12-12 (RD) order technical confirmation form

Determine your requirements according to the items listed in table below:

Product model	Load switch: □FN12-12 / T630-20		
	Load switch – fuse-combination unit: □FN12-12R / T125-31.5		
Qty. (pcs)			
Installation method	□Front side mounted □Reverse side mounted □Wall-mounted Note: Side-mounted ABC phase sequence is far-middle-near layout		
Operation direction	□Right operation □Left operation		
Operation method	□Electric	□Manual	
	□AC110V □DC110V □AC220V □DC220V	Shunt coil	□Yes (operating voltage___V) □No (standard configuration)
Earthing device	□With earth switch □Without earth switch		
Auxiliary switch of main switch	□Five-ON and Five-OFF □No (standard configuration for manual mode) □Others_____		
Auxiliary switch of Earthing switch	□Two-ON and Two-OFF □No (standard configuration) □Others_____		
Secondary wiring scheme	□TENGEN's standard scheme (see catalog) □No-standard scheme (scheme should be provided)		
Outline dimensions	□TENGEN's standard scheme (see catalog) □No-standard scheme (scheme should be provided)		
Other special requirements		Ordering unit (seal) Sign:_____ Confirmation date:_____ Tel:_____	

Note:
1. If not ticked, all options shall be manufactured according to the TENGEN's standard configurations.
2. The load switch – fuse combination is not equipped with a fusible core.

FZN25-12(D)/T630-20 Indoor Medium-voltage AC Vacuum Load Switch
FZRN25-12(D)/T200-31.5 Indoor Medium-voltage AC Vacuum Load Switch – Fuse Combination Unit

1 Overview

The product is suitable for the 10kV, 50Hz three-phase power distribution system for control and protection of electrical devices such as transformer, cables, and overhead lines. It is widely used in terminal substation and box-type transformer substation used in urban network and rural network for control and protection of ring network and dual radiant power supply unit.

2 Type Designation

F Z N 25 - 12 D / T 630 - 20

- 20 — Rated short-time withstand current (kA)
- 630 — Rated current (A)
- T — Spring mechanism
- D — With earth switch
- 12 — Rated voltage (kV)
- 25 — Design code
- N — Indoor
- Z — Vacuum
- F — Load switch

F Z R N 25 - 12 D / T 200 - 31.5

- 31.5 — Rated short-circuit breaking current (kA)
- 200 — Max. rated current of optional fuse (A)
- T — Spring mechanism
- D — With earth switch
- 12 — Rated voltage (kV)
- 25 — Design code
- N — Indoor
- R — With fuse
- Z — Vacuum
- F — Load switch

FZN25-12(D)/T630-20 Indoor Medium-voltage AC Vacuum Load Switch FZRN25-12(D)/T200-31.5 Indoor Medium-voltage AC Vacuum Load Switch – Fuse Combination Unit

3 Technical Parameters

No.	Name			Unit	FZN25-12D	FZRN25-12D
1	Rated voltage			kV	12	12
2	Rated frequency			Hz	50	50
3	Rated current			A	630	200
4	Rated insulation level	Power frequency withstand voltage 1min	To earth, between phases	kV	42	
			Isolating open contacts		48	
			Vacuum open contacts		30	
		Lignting impulse withstand voltage (peak)	To earth, between phases		75	
			Isolating gaps		85	
5	Rated short-circuit withstand current (thermal stability current)			kA	20	--
6	Rated short-circuit duration (thermal stability current)		Load switch	S	4	--
			Earth switch		2	
7	Rated short-circuit making current (peak)			kA	50	--
8	Rated active load breaking current			A	630	--
	Rated closed loop breaking current				630	--
	5% active load breaking current				31.5	--
	Rated cable-charging current				10	--
9	Breaking non-load transformer capacity			kVA	1600	
10	Rated short-circuit breaking current (current limiting fuse)			kA	-	31.5
11	Rated transfer current or take-over current			A	-	2000
12	Mechanical life			Times	10,000	
13	Impactor output energy			J	-	2~5
14	Main circuit resistance			μΩ	≤170	≤300

4 Operating Conditions

4.1 Ambient temperature: Max.: +40℃; Min.: -15℃.

4.2 Altitude: Not exceed 1,000 meters.

4.3 Relative humidity: Daily mean ≤95%; monthly mean ≤90%;

4.4 Seismic intensity does not exceed 8 magnitude scales.

4.5 Used in a place where there is no fire, explosive risk, chemical corrosion, and violent vibration.

4.6 The installation site shall be free of flammable matters, explosion risks, chemical corrosion, and violent vibration.

Note: If deviation of normal service conditions occurs, the customer should negotiate with the manufacturer.

FZN25-12(D)/T630-20 Indoor Medium-voltage AC Vacuum Load Switch FZRN25-12(D)/T200-31.5 Indoor Medium-voltage AC Vacuum Load Switch – Fuse Combination Unit

5 Features

5.1 Vacuum extinguishing method is used, featuring with stable and reliable performance, long electrical life, high opening and closing times, and strong making and breaking capacity;

5.2 By integrating the disconnector, load switch and earthing switch together, the structure is compact;

5.3 The direct-acting type isolating break is connected to the vacuum interrupter in series, and the unique operating program linkage is completed one time;

5.4 The load switch, earthing switch, valve, and switch cabinet are equipped with “Five-preventive” mechanical interlock to prevent misoperation for safe and reliable action.

6 Outline and Installation Dimensions

6.1 Load switch

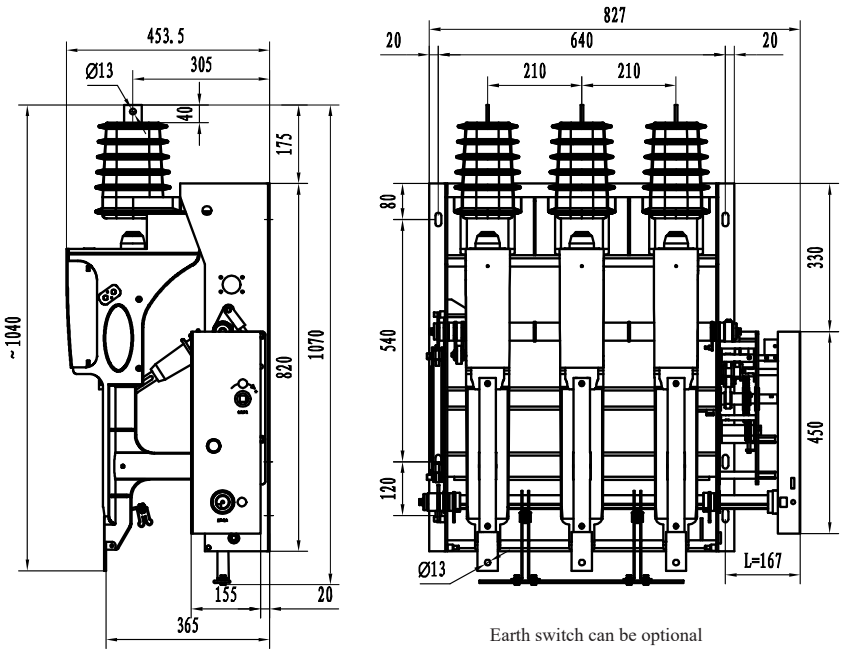

Earth switch can be optional

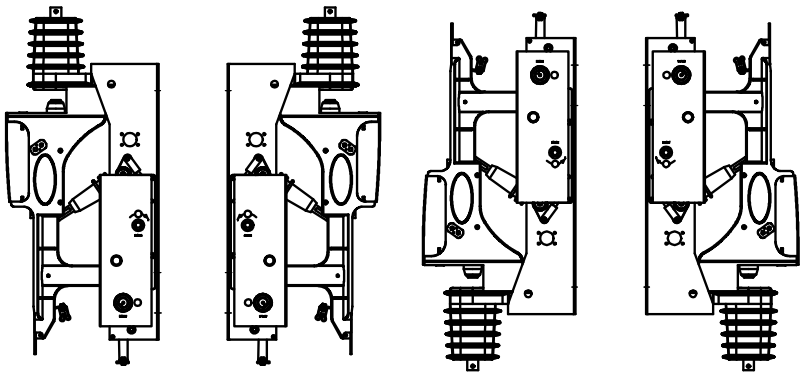

Right console installed at front side | Left console installed at front side | Right console installed at back side | Left console installed at back side

FZN25-12(D)/T630-20 Indoor Medium-voltage AC Vacuum Load Switch FZRN25-12(D)/T200-31.5 Indoor Medium-voltage AC Vacuum Load Switch – Fuse Combination Unit

6.2 Load switch – fuse combination unit

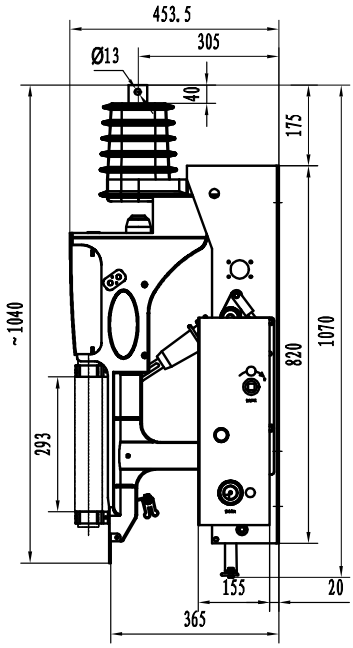

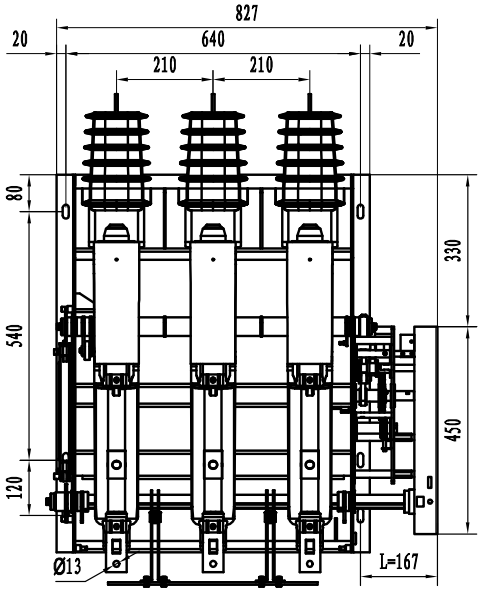

Earth switch can be optional

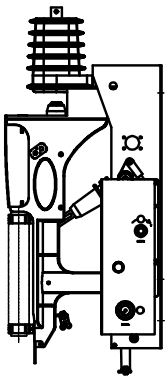

Right console installed at front side

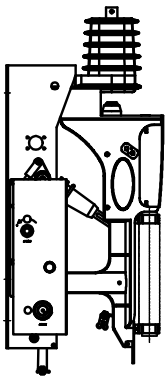

Left console installed at front side

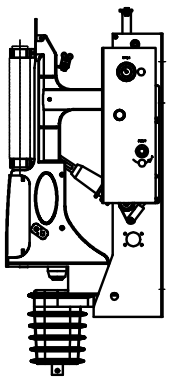

Right console installed at back side

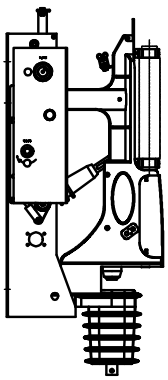

Left console installed at back side

FZN25-12(D)/T630-20 Indoor Medium-voltage AC Vacuum Load Switch
FZRN25-12(D)/T200-31.5 Indoor Medium-voltage AC Vacuum Load Switch – Fuse Combination Unit

6.3 Cabinet door hole and interlock installation diagram (with right console installed at front side)

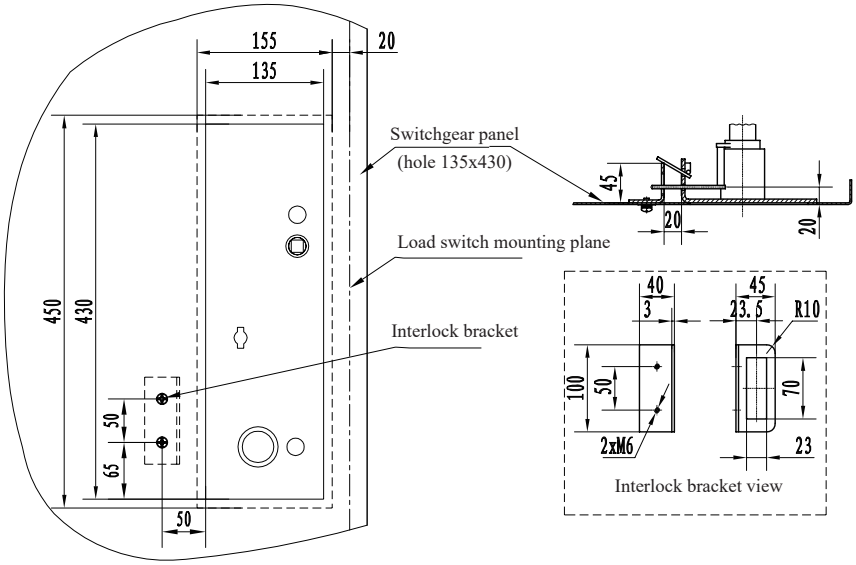

6.4 Baffle hole diagram

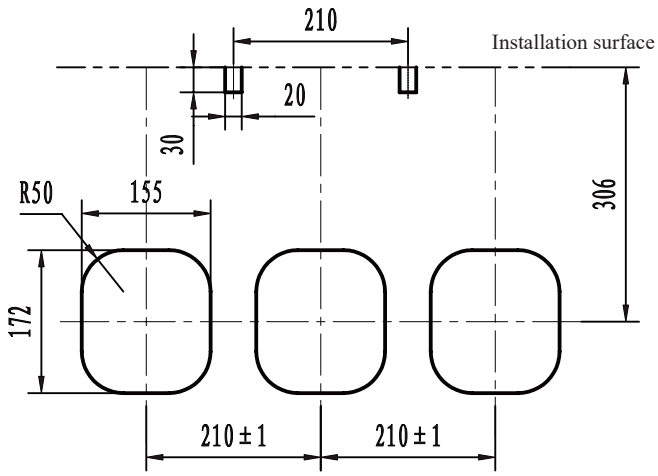

7 Secondary Scheme Diagram

7.1 Electric (without hold relay)

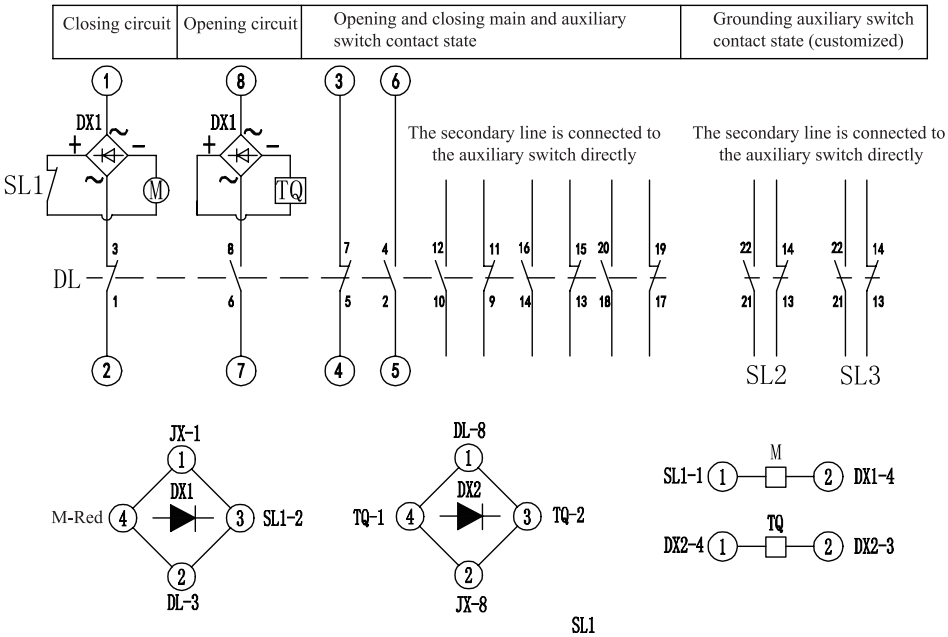

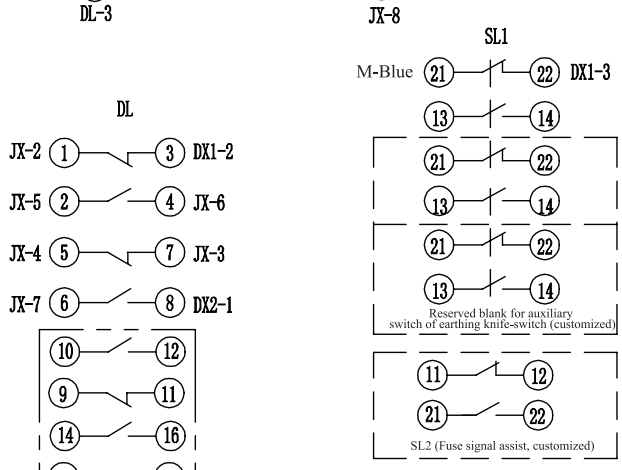

JX

1	DX1-1
2	DL-1
3	DL-7
4	DL-5
5	DL-2
6	DL-4
7	DL-6
8	DX2-2
9	
10	

Symbol	Name	Symbol	Name
SL1-SL3	Microswitch	DX1-DX2	Rectifier bridage
JX	Wiring terminal block	TQ	Opening coil
M	Energy storage motor	DL	Aux. switch

FZN25-12(D)/T630-20 Indoor Medium-voltage AC Vacuum Load Switch
FZRN25-12(D)/T200-31.5 Indoor Medium-voltage AC Vacuum Load Switch – Fuse Combination Unit

7.2 Electric (with hold relay)

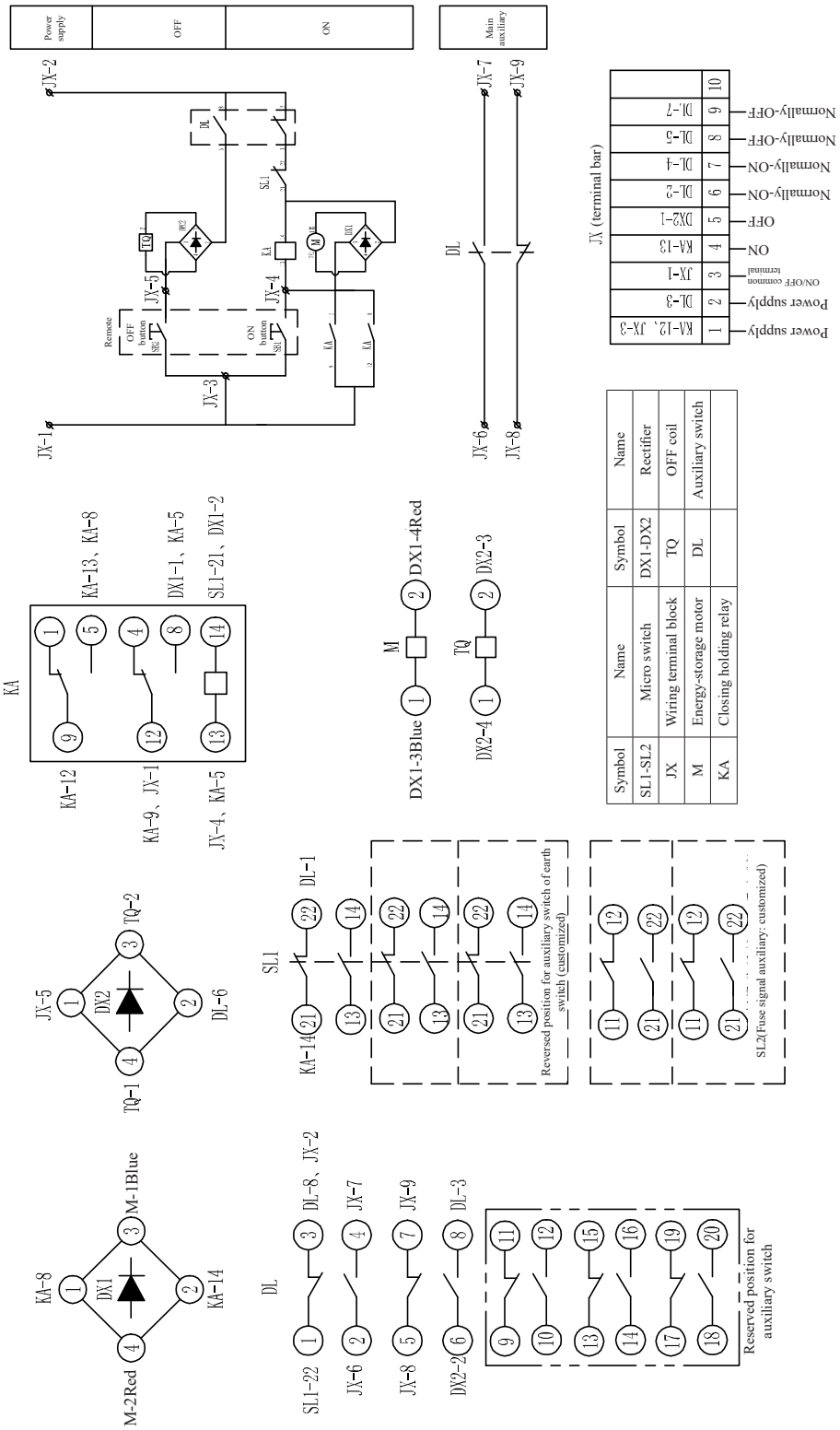

Symbol	Name	Symbol	Name
SL1-SL2	Micro switch	DX1-DX2	Rectifier
JX	Wiring terminal block	TQ	OFF coil
M	Energy-storage motor	DL	Auxiliary switch
KA	Closing holding relay		

8 Ordering Technical Confirmation Form

FN(R) N25-12 (D) order technical confirmation form

Please determine your requirements according to the items listed in table below:

Product model	Load switch: □FZN25-12(D)/T630-20	
	Load switch – fuse combination unit: □FZRN25-12(D)/T200-31.5	
Qty. (unit)		
Installation method	□Front mounted □Back mounted □Wall-mounted Note: The phase sequence of phase A, B, and C is far, medium and near for side-mounted method.	
Operating direction	□Right operated □Left operated	
Operating mode	□Electric	□Without holding relay (standard configuration) □With holding relay
		□AC110V □DC110V □AC220V □DC220V
	□Manual □Manual with electric opening (operating voltage AC/DC_)	
Earthing device	□With earthing knife-switch □Without earthing knife-switch	
Aux. switch of main knife switch	□Five-open and five-closed □No (manual as standad configuration) □Others_____	
Earthing aux. switch	□Two-open and two-closed □No (standad configuration) □Others_____	
Secondary wirintg scheme	□Tengen standard sheme (see catalogue) □Non-standard scheme (please attach the figure)	
Dimensions	□Tengen standard outline (see catalogue) □Non-standard outline (please attach the figure)	
Other special requirements		Ordering unit (seal) Signature:_____ Confirmation date:_____ Tel:_____

Notes: 1. Options not checked are produced according to the TENGEN's standard configuration;
2. Load switch – fuse combination unit without fusible core.

GN19-12 Indoor Medium-voltage AC Switch-disconnector

1 Overview

1.1 Main applications:

GN19-12(C) indoor Medium voltage switch disconnector is used in the AC 50Hz power system with rated voltage of 12kV and with rated current of less than 1250A for closing and opening circuit under the voltage without load. The isolating switch can be equipped with a CS6-1 manual operating mechanism and an optional live display device.

2 Type Designation

G N 19 - 12 (C) / □ – □ – X

- X: With a live display sensor
- □ (second): Rated short-time withstand current (kA)
- □ (first): Rated current (A)
- (C): Wall-through type
- 12: Rated voltage (kV)
- 19: Design code
- N: Indoor
- G: Switch disconnector

3 Technical Parameters

Model	Rated voltage (kV)	Rated current (A)	Rated peak withstand current (kV)	Rated short-time withstand current (kA/4S)	Power frequency withstand voltage for 1 minute (kV)	Lightning impact voltage (kV)
GN19-12/400-12.5	12	400	31.5	12.5	P/phase to phase, P/phase to earth: 42kV; O/open contacts:48	P/phase to phase, P/phase to earth: 75kV; O/open contacts:85
GN19-12/630-20		630	50	20		
GN19-12/1000-31.5		1000	80	31.5		
GN19-12/1250-40		1250	100	40		
GN19-12C/400-12.5		400	31.5	12.5		
GN19-12C/630-20		630	50	20		
GN19-12C/1000-31.5		1000	80	31.5		
GN19-12C/1250-40		1250	100	40		

4 Operating Conditions

4.1 Ambient temperature: Upper limit: +40ºC; Lower limit: -15ºC;

4.2 The altitude does not exceed 1,000 meters.

4.3 For relative air humidity, the daily mean is not greater than 95%, and the monthly mean is not greater than 90%;

4.4 The earthquake intensity does not exceed 8 degrees.

4.5 Installed in places free of fire, explosive risk, chemical corrosion, and violent vibration.

4.6 The installation site shall be free of flammable substance, explosive risk, chemical corrosion and violent vibration.

4.7 Pollution degree 2.

Please contact the manufacturer for customizing those failed to follow the normal working conditions.

GN19-12 Indoor Medium-voltage AC Switch-disconnector

5 Outline and Installation Dimensions

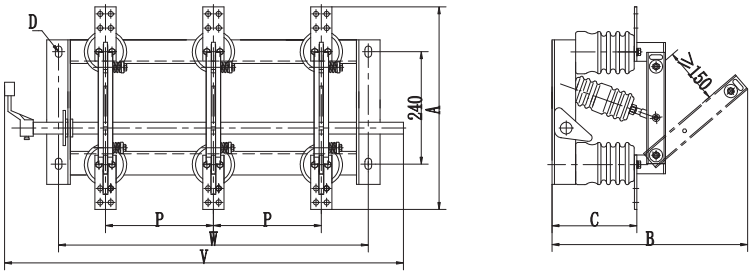

Fig. 1 GN19-12 Outline dimensions

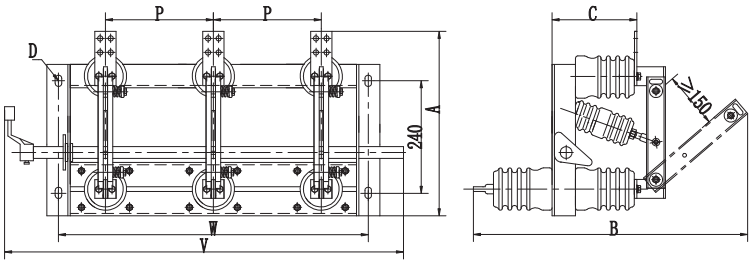

Fig. 2 GN19-12C Outline dimensions

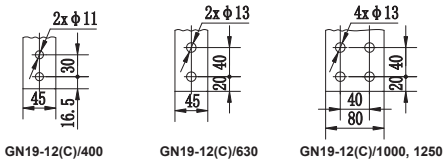

Fig. 3 Wiring terminal installation dimensions

Model	P	W	V	A	B	C	D
GN19-12/400	210	620	868	450	446	185	4x14x24
	230	660	908				
	250	700	948				
GN19-12/630	210	620	868	470			
	230	660	908				
	250	700	948				
GN19-12/100 GN19-12/1250	210	620	868	510	500	196	4x18x28
	230	660	908				
	250	700	948				
GN19-12C/400	210	620	868	420	690	185	4x14x24
	230	660	908				
	250	700	948				
GN19-12C/630	210	620	868	430			
	230	660	908				
	250	700	948				
GN19-12C/100 GN19-12C/1250	210	620	868	470	745	196	4x18x28
	230	660	908				
	250	700	948				

GN19-12 Indoor Medium-voltage AC Switch-disconnector

6 Ordering Technical Confirmation Form

Technical Confirmation Form for Ordering GN19-12 Indoor Medium-voltage AC Switch-disconnector

Determine your requirements according to the items listed in table below:

Product model	□GN19-12(Flush type)	
	□GN19-12C(Wall-through type)	
Order qty. (pcs)		
Rated current (A)	□630 □1250 □Others_____	
Phase spacing (mm)	□210 □230 □250 □275 □Others_____	
Operation direction	□Right operation □Left operation □Others____	
Short-time withstand current (kA)	□20 □25 □31.5	
Auxiliary switch	□No (standard configuration) □Yes:___ON___OFF	
Other instructions	1.With CS6-1 manual operating mechanism as standard configuration; 2.All linkages between the isolating switch bodies and the operating mechanism are provided by user;	
Other special requirements		Ordering unit (seal) Sign: _____ Confirmation date:_____ Tel:_____

Note: If not ticked, all options shall be manufactured according to the TENGEN's standard configurations.

0.28~17kV Series Polymeric Housed Metal Oxide Surge Arrester

1 Overview

YH1.5W type 0.28~17kV composite jacket oxide lightning rod (hereinafter referred to “lightning rod”) is a high-performance new overvoltage protection element, suitable for distribution board, switchgear, and power metering box as an overvoltage protection.

2 Type Designation

Y H □ □ □ □ – □ / □ – □

- Usage catagory
  W: Anti-pollution type; G: Highland type; TLB: With disconnector; DL: Switchable type; DL-TLB: Switchable type-disconnector;
- Max. residual voltage at the nominal discharge current (kV)
- Rated voltage of arrester (kV)
- Product Design code
- Use type
  S: Power distribution type; Z: Power station type; X:Wire type
- Structure feature
  W: No Open contacts;
- Nominal discharge current (kA)
- Polymeric housed
- Metal oxide surge arrester

3 Technical Parameters

Arrester applications	Arrester model	Effective value of rated voltage of arrester (kV)	Effective value of rated voltage of system (kV)	Effective value of continuous operating voltage (kV)	DC 1mA reference voltage not less than (kV)	Maximum residual voltage (kV)			Max. leakage current under 0.75 DC reference voltage, μA
						Under steep slope impulse current (peak)	Under lighting impulse current (peak)	Under operating impulse current (peak)	
Low voltage	YH1.5W-0.28/1.3	0.28	0.22	0.24	0.60		1.30		50
Capacitor	YH5WS-17/50 YH5WS-17/50DL YH5WS-17/50TLB YH5WS-17/50DL-TLB YH5WD(B)G-17/50	17	10	13.6	25.0	57.5	50.0	42.5	
Station	YH5CX-13/40	17	10	13.6	24	51.8	45	38.3	

0.28~17kV Series Polymeric Housed Metal Oxide Surge Arrester

4 Operating Conditions

4.1 Ambient temperature: Not higher than +55ºC, not below than -40ºC;

4.2 Altitude: Not exceed 2,000 meters;

4.3 Pollution degree 3, 4

4.3 Power frequency: Not less than 48Hz, not exceed 60Hz;

4.4 Earthquake intensity: Not exceed 7 degrees;

4.5 The maximum wind speed does not exceed 35m/s;

4.6 Specify when ordering if used in highland and polluted areas.

5 Features

5.1 The zinc-oxide surge arrester is the most advanced overvoltage protector currently with excellent non-linear volt-ampere characteristics, good response characteristics, non-follow current, large discharge current capacity, low residual voltage, strong overvoltage restraint capacity, reliable protection, simple structure, convenient maintenance, and long service life.

5.2 Under the normal system working voltage, the zinc-oxide surge arrester is at the high-resistance state, and only microampere current passes through it; under the overvoltage and large current, the arrester is at the low-resistance state, thereby limiting the residual voltages at both ends of arrester.

5.3 The polymetric housed metal oxide surge arrester features with excellent weather, pollution and electric arc resistance, with hydrophobicity on its surface, widely used in various power sites.

5.4 Under the collaboration of the series gap formed between the current leading ring and the wire and the current limiting element (arrester body), the power frequency follow current can be effectively cut at moment, thus avoiding disconnection accident of the insulating wire due to lightning stroke.

6 Outline and Installation Dimensions

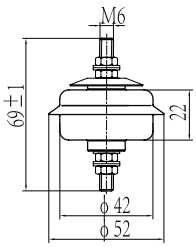

YH1.5W-0.28/1.3

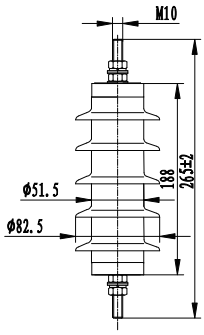

YH5WZ-17/45

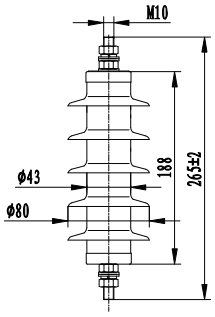

YH5WS-17/50

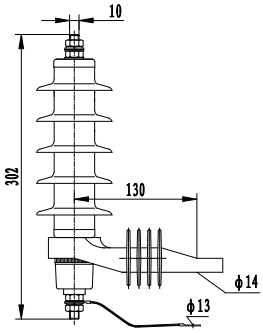

YH5WS-17/50TLB

0.28~17kV Series Polymeric Housed Metal Oxide Surge Arrester

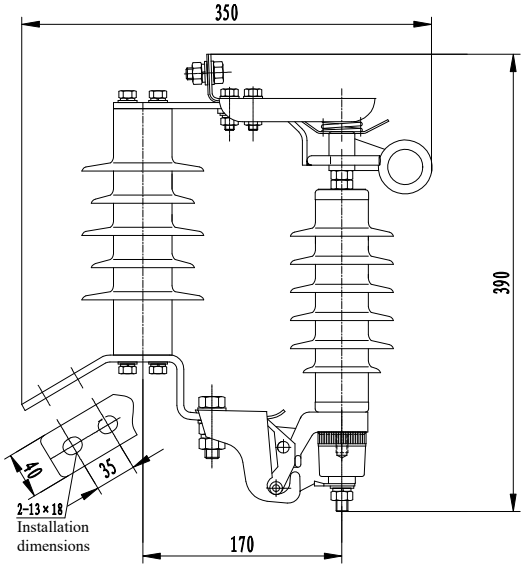

YH5WS-17/50DL-TLB

7 Ordering Notice

7.1 Product model, name, specification, and quantity;

7.2 Altitude and pollution grade of the use site;

7.3 Names and quantity of accessories.

Drop-out Fuse

1 Overview

Main applications:
The drop-out fuse is also called as a drop fuse, and it is a common short circuit protection switch used in the 10kV power distribution line branches and distribution transformer, mainly suitable for the 10kV power distribution line and the primary side of the distribution transformer as a protector and for switching operation of the equipment.

2 Type Designation

(H) □ □ – □ □ / □

- Rated current (A)
- F: Load type, No: Common type
- Rated voltage (kV)
- Design code
- PD: Outdoor (drop-out type) fuse
- H: Composite insulator No: Ceramic insulator

3 Technical Parameters

Product model	Rated voltage kV	Rated current A	Rated short circuit breaking current kA	1min power frequency withstand voltage kV	Rated lightning impulse withstand voltage kV To earth / gap	Creepage distance mm (standard)
(H) RW12(PD1)-12	12	100/200	6.3/12.5/16	42/49	75/85	320

4 Working Environment Conditions

4.1 Ambient temperature: The max. temperature is +70℃, the min. temperature is -40℃, and the max. daily temperature difference is 25K;

4.2 Relative humidity: The daily mean value is not greater than 95%, the monthly mean value is not greater than 90%;

4.3 The altitude does not exceed 1000m.

4.4 Wind speed: Not exceed 35 m/s.

4.5 Icing thickness: Not greater than 10 mm.

4.6 The earthquake intensity does not exceed 8 degrees;

4.7 The installation site shall be free of frequent severe vibration;

4.8 The ambient air is free from obvious pollution such as dust, dust, corrosive gas or salt mist.

For requirements out of the normal working conditions, please contact the manufacturer.

Drop-out Fuse

5 Features

The drop-out fuse consists of an insulating bracket and a fuse tube. The static contact is mounted at both ends of the insulating bracket and the dynamic contact is installed at both ends of the fuse tube. The fuse tube is composed of an arc extinction tube of inner layer and a phenolphthalein paper tube or an epoxy glass cloth tube of outer layer, featuring with small volume, light weight, simple process, flexible installation, easy operation, and strong outdoor environment adaption, and can be used to turn on and off the non-load current; if an arc extinguishing chamber is provided, this fuse tube can be used to turn on and off the load current.

6 Outline and Installation Dimensions

6.1 (H) RW12(PD1)-12F Series Outline Drawing

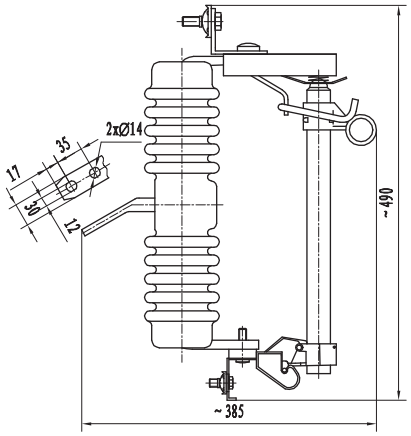

RW12(PD1)-12

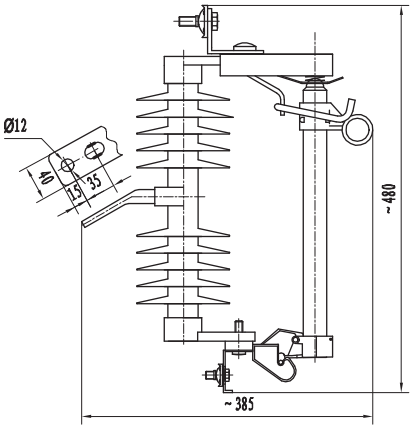

HRW12(HPD1)-12

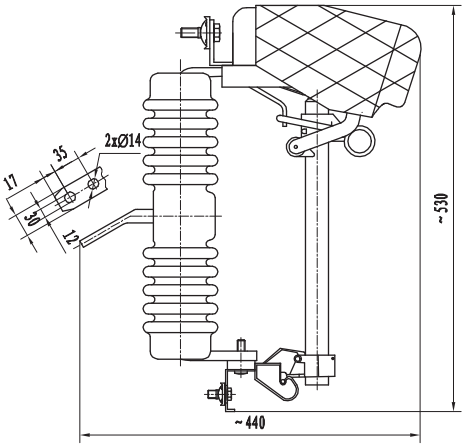

RW12(PD1)-12F

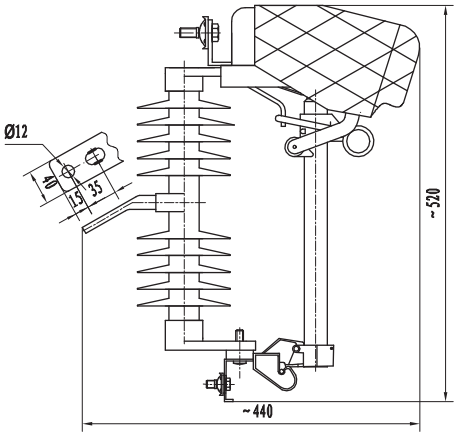

HRW12(HPD1)-12F

Drop-out Fuse

7 Ordering Technical Confirmation Form

(H) RW12-12 Outdoor High Voltage AC Drop-Out Type Fuse Order Technical Confirmation Form

Please determine your requirements according to the items listed in the table below:

Product model	□RW12-12_____(Gray ceramic insulator) □HRW12-12_____(Gray silicone rubber insulator)	
Order Qty. (set) (3 pcs = 1 set)	_____Pcs	
Rated current (A)	□100 □200	
Structure	□Common type □Load type (arc extinguishing hood)	
Conducting plate material	□T3 copper (standard) □T2 copper □Others:_____ Note: Standard 100A thickness is 1mm, and 200A thickness is 2mm	
Polltion degree	□Grade III (standard) □Grade IV □Others:_____	
Conductor material	□T3 copper, copper casting H59 (standard) □T2 copper, copper casting C95600 Others:_____	
Conductor surface treatment	□Common tin plating (standard) Others:_____	
Spring / Pin material	□Common carton steel (standard) □Stainless steel S304	
Standard part	□Dacromet (standard) □ Hot-dip galvanizing □Stainless steel S304	
Fuse element	□No (standard) □Common type (T type) A with pcs equipped for each □Grid type (K type) A with pcs equipped for each	
Optional accessories (standard configuration is not provided)	□Insulating jacket (qty.<3 pcs; color: □Red, □Yellow, □Green) □Mounting bracket (customized according to the drawings provided by user) □Earth ring (hook)	
Other special requirements		Ordering unit (seal) Signature:_____ Confirmation date:_____ Tel:_____

Note: If no option is selected, the product is manufactured according to the (standard configuration) requirements by default!

KYN28-12 Series Armored Movable AC Metal-Enclosed Switchgear

1 Overview

KYN28-12 indoor AC armored removable metal-enclosed switchgear is used in three-phase AC power system with rated voltage of 12kV and rated frequency of 50Hz for receiving and distributing electric energy and for control protection and monitoring of circuits.

This series of products have "Five-Prevents" interlock functions of preventing the push-pull of circuit breaker handcart under load, preventing false ON &OFF of circuit breaker, preventing power-on/off of circuit breaker when the Earthing switch is in the closed position, preventing entering the live compartment, and preventing turning on the Earthing switch when electrified. This product is a power distribution that can be equipped with the ZN63A-12 vacuum circuit breaker developed by our company and the VD4, VB2 and 3AH vacuum circuit breakers from various manufacturers for superior performance.

This product complies with GB3906 "3~35kV Alternating-current metal-enclosed switchgear", GB/T 11022 "Common specifications for high-voltage switchgear and controlgear standard", and DL/T404 "Technical conditions for ordering indoor AC high-voltage switchgear".

2 Type Designation

K Y N 28 - 12 / 01

- 01 — Primary circuit scheme number
- 12 — Rated voltage (kV)
- 28 — Design code
- N — Indoor
- Y — Movable
- K — Armored type

3 Technical Parameters

3.1 Technical parameters of switchgear equipment

Name	Unit	Parameter
Rated voltage	kV	12
Rated power frequency withstand voltage 1min Ud	kV	Phase-to-phase, to earth 42, open contacts 48
Rated impulse withstand voltage, Up(peak)	kV	Phase-to-phase, to earth 75, open contacts 85
Rated freq.	Hz	50
Rated current	A	630, 1250, 1600, 2000, 2500, 3150, 4000
Rated current of branch busbar	A	630, 1250, 1600, 2000, 2500, 3150, 4000
Rated short-time withstand current(effective value)	kA	20, 25, 31.5, 40
Rated peak withstand current	kA	50, 63, 80, 100
Rated short-circuit duration	s	4
Protection grade		Housing: IP4X; when the compartment door and circuit breaker door are open: IP2X

KYN28-12 Series Armored Movable AC Metal-Enclosed Switchgear

3.2 Technical parameters of KYN28-12 vacuum circuit breaker

Name	Unit	Parameter		
Rated voltage	kV	12		
Rated lighting impulse withstand voltage (peak)		open contacts 85, phase-to-phase and to earth 75		
Rated power frequency withstand voltage (1min)		open contacts 48, phase-to-phase and to earth 42		
Rated freq.	Hz	50		
Rated short-circuit breaking current	kA	20, 25	31.5	40
Rated current	A	630~1,250	630~4,000	1250~4,000
Rated short-time withstand current	kA	20, 25	31.5	40
Rated peak withstand current		50, 63	80	100
Rated short-circuit making current (peak)	kA	50, 63	80	100
Power frequency withstand voltage of secondary circuit (1min)	V	1,000 (2,000 customized)		
Rated operating sequence		O—0.3s—CO—180s—CO	O—180s—CO—180s—CO	
Rated short-circuit duration	s	4		
Rated single/back-to-back capacitor bank breaking current	A	20~31.5kA	40kA	
		630/400	800/400	
Rated capacitor bank making inrush current		12.2 (With frequency not greater than1000Hz)		
Mechanical life	Times	10000/customized		
Rated short-circuit current breaking times	Times	30		

4 Operating Conditions

4.1 Ambient temperature: Max.: +40°C, Min.: -15°C (down to -45°C under special process conditions);

4.2 Ambient humidity: daily mean < 95%, monthly mean ≤ 90%;

4.3 Altitude: no more than 1,000 meters;

4.4 Earthquake resistance: the earthquake intensity does not exceed magnitude 8;

4.5 There is no obvious pollution such as corrosion or flammable gas, and water vapor in the surrounding air;

4.6 There is no serious dirt and frequent violent vibration; the Category 1 shall be met under severe conditions;

Note: If deviation of normal service conditions occurs, the customer should inform the manufacturer before production.

KYN28-12 Series Armored Movable AC Metal-Enclosed Switchgear

5 Features

5.1 With a perfect and complete switchgear scheme and with mature structure, various power supply system schemes can be flexibly formed according to the needs of different users to fully satisfy the field and operation requirements.

5.2 Complete "Five-prevent" interlock provided: the reverse interlock of the rear door, the valve interlock, the interlock of middle door, and the emergency switch-off mechanism can be match as needs for high safety performance.

5.3 The 2.0 aluminum-zinc-coated steel plate is made by inward folding and double bending process. The entire frame is riveted with high-strength cup-shaped blind rivets. The riveted cabinet features with high stability; the cabinet door is sprayed with plastics providing strong impact resistance and corrosion resistance.

5.4 The standardized product design and modularized, assembled, and systematic design development are adopted for convenient organization of production; the product has high safety and interchangeability and features with easy installation, operation, and maintenance.

5.5 The different brand of vacuum circuit breaker can be selected; that is, our brand of circuit breaker can be used, and other brand is also available.

6 Product Structure Design and Dimensions

6.1 Standard high and low cabinets

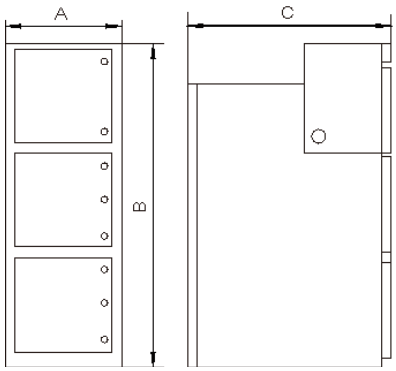

Height B (mm)		2300
Width A (mm)	The related current of the branch busbar is ≤1250, the thermal stability current is ≤31.5kA	650
	The related current of the branch busbar is ≤1250, the thermal stability current is ≤40kA	800
	The related current of the branch busbar is ≥ 1600	1000
Depth C (mm)	Cable outlet	1500
	Overhead inlet and outlet lines	1660

KYN28-12 Series Armored Movable AC Metal-Enclosed Switchgear

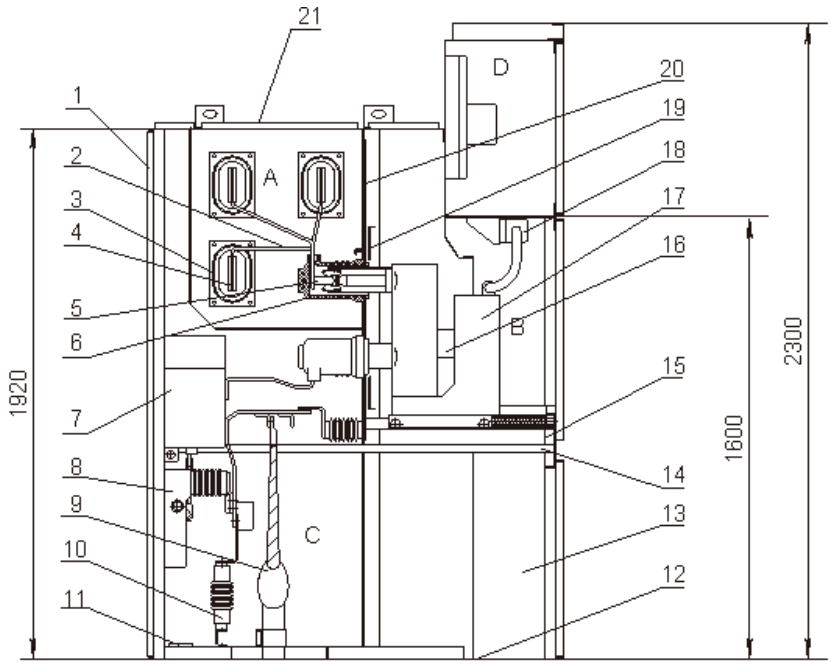

A. Busbar chamber
1. Housing
5. Stationary contact device
9. Cable
13. Control small busbar
17. Circuit breaker cart
21. Voltage discharge channel

B. Circuit breaker cart chamber
2. Branch small busbar
6. Contact box
10. Arrester
14. Earth switch operating mechanism
18. Secondary plug

C. Cable chamber
3. Busbar bushing
7. Current transformer
11. Earth main busbar
15. Withdrawable type horizontal barrel
19. Barrel (valve)

D. Relay instrument chamber
4. Main busbar
8. Earth switch
12. Base plate
16. Heating device
20. Removable barrel

6.2 Standard flat-top cabinet

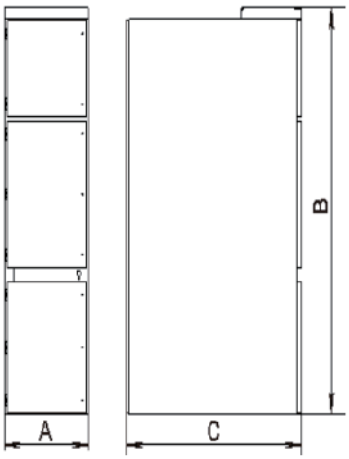

Height B (mm)		2200
	Rated current: 4000~5000A	2300
Width A (mm)	Rated current of branch busbar: ≤1250; Thermal stability current: ≤31.5kA	650
	Rated current of branch busbar: ≤1250; Thermal stability current: ≤40kA	800
	Rated current of branch busbar: ≥1600	1000
Depth C (mm)	Cable outlet and overhead incoming and outgoing line	1350
	Rated current: 4000~5000A	1550 (1660)

KYN28-12 Series Armored Movable AC Metal-Enclosed Switchgear

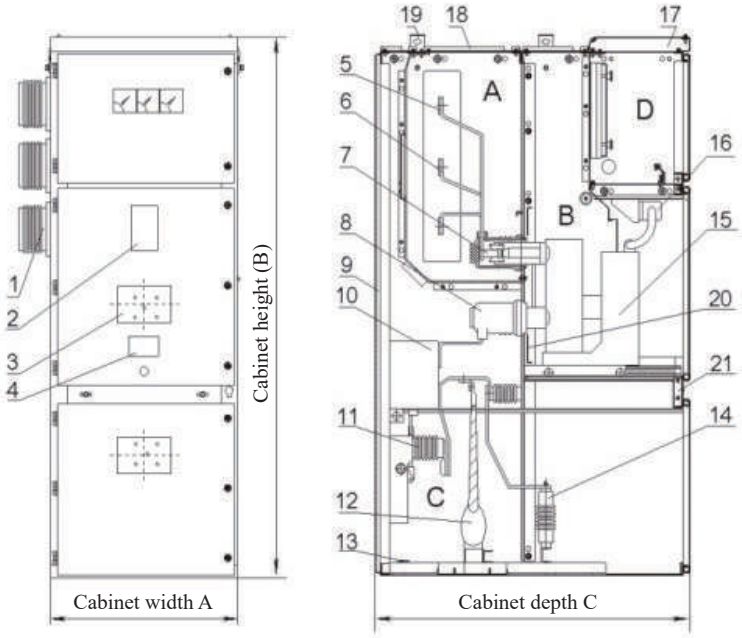

A. Busbar chamber

B. Circuit breaker cart chamber

C. Cable chamber

D. Relay instrument chamber

1. Busbar bushing

2. Analog busbar coil

3. Cart chamber observation window

4. Nameplate

5. Main busbar

6. Branch busbar

7. Stationary contact

8. Contact box

9. Rear seal plate

10. Current transformer

11. Earth switch

12. Cable

13. Main earth busbar

14. Arrester

15. Circuit breaker cart

16. Aviation plug

17. Secondary small busbar chamber

18. Pressure discharge cover

19. Lifting lug

20. Barrel (valve)

21. Withdrawable type horizontal barrel

7 Primary Main Circuit Schematic Diagram

Scheme No.		01	02	03	04	05	06
Main circuit schematic diagram			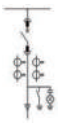				
Cabinet dimensions (WxDxH)(high and low cabinet) Dxh (flat-top cabinet) (mm)		650 800 x 1500x2300 1000 1350x2200	650 800 x 1500x2300 1000 1350x2200	650 800 x 1500x2300 1000 1350x2200	650 800 x 1500x2300 1000 1350x2200	650 800 x 1500x2300 1000 1350x2200	650 800 x 1500x2300 1000 1350x2200
Main electrical components	Rated current (A)	630-5000					
	Vacuum circuit breaker (ZN63A)	1	1	1	1	1	1
	Current transformer	2	2	2	3	3	3
	Earthing switch		1	1		1	1
	Lightning arrester			3			3
Circuit name		Receiving, feed	Receiving, feed	Receiving, feed	Receiving, feed	Receiving, feed	Receiving, feed
Remarks							

KYN28-12 Series Armored Movable AC Metal-Enclosed Switchgear

Scheme No.		07	08	09	10	11	12
Main circuit schematic diagram							
Cabinet dimensions (WxDxH)(high and low cabinet) Dxh (flat-top cabinet) (mm)		650 800 1000 x 1500x2300 1350x2200	650 800 1000 x 1500x2300 1350x2200	650 800 1000 x 1500x2300 1350x2200	650 800 1000 x 1500x2300 1350x2200	650 800 1000 x 1500x2300 1350x2200	650 800 1000 x 1500x2300 1350x2200
Main electrical components	Rated current (A)	630-5000					
	Vacuum circuit breaker (ZN63A)	1	1	1	1	1	1
	Current transformer	2	2	2	3	3	3
	Earthing switch		1		1		1
Circuit name		Contact (right)	Contact (right)	Contact (left)	Contact (left)	Contact (right)	Contact (right)
Remarks							

Scheme No.		13	14	15	16	17	18
Main circuit schematic diagram							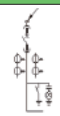
Cabinet dimensions (WxDxH)(high and low cabinet) Dxh (flat-top cabinet) (mm)		650 800 1000 x 1500x2300 1350x2200	650 800 1000 x 1500x2300 1350x2200	650 800 1000 x 1500x2300 1350x2200	650 800 1000 x 1500x2300 1350x2200	650 800 1000 x 1500x2300 1350x2200	650 800 1000 x 1500x2300 1350x2200
Main electrical components	Rated current (A)	630-5000					
	Vacuum circuit breaker (ZN63A)	1	1	1	1	1	1
	Current transformer	3	3	2	2	2	2
	Earthing switch	1		1	1		1
Circuit name		Contact (left)	Contact (left)	Overhead incoming line (left contact)	Overhead incoming line (left contact)	Overhead incoming line (right contact)	Overhead incoming line (right contact)
Remarks							

Scheme No.		19	20	21	22	23	24
Main circuit schematic diagram			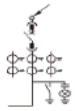		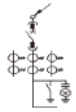	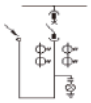	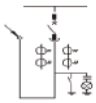
Cabinet dimensions (WxDxH)(high and low cabinet) Dxh (flat-top cabinet) (mm)		650 800 1000 x 1500x2300 1350x2200	650 800 1000 x 1500x2300 1350x2200	650 800 1000 x 1500x2300 1350x2200	650 800 1000 x 1500x2300 1350x2200	650 800 1000 x 1500x2300 1350x2200	650 800 1000 x 1500x2300 1350x2200
Main electrical components	Rated current (A)	630-5000					
	Vacuum circuit breaker (ZN63A)	1	1	1	1	1	1
	Current transformer	3	3	3	3	2	2
	Earthing switch		1		1		1
Circuit name		Overhead incoming line (left contact)	Overhead incoming line (left contact)	Overhead incoming line (right contact)	Overhead incoming line (right contact)	Overhead incoming and outgoing line	Overhead incoming and outgoing line
Remarks							

KYN28-12 Series Armored Movable AC Metal-Enclosed Switchgear

Scheme No.		25	26	27	28	29	30
Main circuit schematic diagram		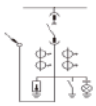	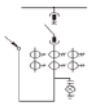	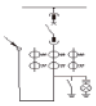	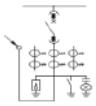	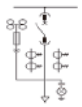	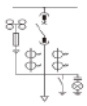
Cabinet dimensions (WxDxH)(high and low cabinet) Dxh (flat-top cabinet) (mm)		650 800 x 1500x2300 / 1000 1350x2200	650 800 x 1500x2300 / 1000 1350x2200	650 800 x 1500x2300 / 1000 1350x2200	650 800 x 1500x2300 / 1000 1350x2200	650 800 x 1500x2300 / 1000 1350x2200	650 800 x 1500x2300 / 1000 1350x2200
Main electrical components	Rated current (A)	630-5000					
	Vacuum circuit breaker (ZN63A)	1	1	1	1	1	1
	Current transformer	2	3	3	3	2	2
	Voltage transformer					2	2
	High-voltage fuse					3	3
	Earthing switch	1		1	1		1
	Lightning arrester	3			3		
Circuit name		Overhead incoming and outgoing line	Overhead incoming and outgoing line	Overhead incoming and outgoing line	Overhead incoming and outgoing line	Incoming cable + PT	Incoming cable + PT
Remarks							

Scheme No.		31	32	33	34	35	36
Main circuit schematic diagram							
Cabinet dimensions (WxDxH)(high and low cabinet) Dxh (flat-top cabinet) (mm)		650 800 x 1500x2300 / 1000 1350x2200	650 800 x 1500x2300 / 1000 1350x2200	650 800 x 1500x2300 / 1000 1350x2200	650 800 x 1500x2300 / 1000 1350x2200	650 800 x 1500x2300 / 1000 1350x2200	650 800 x 1500x2300 / 1000 1350x2200
Main electrical components	Rated current (A)	630-5000					
	Vacuum circuit breaker (ZN63A)	1	1	1	1	1	1
	Current transformer	2	3	3	3	2	2
	Voltage transformer	2	2	2	2	3	3
	High-voltage fuse	3	3	3	3	3	3
	Earthing switch			1			1
	Lightning arrester	3			3		
Circuit name		Incoming cable + PT	Incoming cable + PT	Incoming cable + PT	Incoming cable + PT	Incoming cable + PT	Incoming cable + PT
Remarks							

KYN28-12 Series Armored Movable AC Metal-Enclosed Switchgear

Scheme No.		37	38	39	40	41	42
Main circuit schematic diagram							
Cabinet dimensions (WxDxH)(high and low cabinet) Dxh (flat-top cabinet) (mm)		650 800 1000 x 1500x2300 1350x2200	650 800 1000 x 1500x2300 1350x2200	650 800 1000 x 1500x2300 1350x2200	650 800 1000 x 1500x2300 1350x2200	650 800 1000 x 1500x2300 1350x2200	650 800 1000 x 1500x2300 1350x2200
Main electrical components	Rated current (A)	630-5000					
	Vacuum circuit breaker (ZN63A)	1					
	Current transformer	2					
	Voltage transformer	3	2	2	2	3	2
	High-voltage fuse	3	3	3	3	3	3
	Lighting arrester	3			3	3	3
Circuit name		Incoming cable + PT	Voltage measurement	Voltage measurement	Voltage measurement + Lighting arrester	Voltage measurement + Lighting arrester	Voltage measurement + Lighting arrester
Remarks							

Scheme No.		43	44	45	46	47	48
Main circuit schematic diagram							
Cabinet dimensions (WxDxH)(high and low cabinet) Dxh (flat-top cabinet) (mm)		650 800 1000 x 1500x2300 1350x2200	650 800 1000 x 1500x2300 1350x2200	650 800 1000 x 1500x2300 1350x2200	650 800 1000 x 1500x2300 1350x2200	650 800 1000 x 1500x2300 1350x2200	650 800 1000 x 1500x2300 1350x2200
Main electrical components	Rated current (A)	630-5000					
	Voltage transformer	3	2	2	3	3	2
	High-voltage fuse	3	3	3	3	3	3
	Lighting arrester	3					3
Circuit name		Voltage measurement + Lighting arrester	Voltage measurement + Buscouple	Voltage measurement + Buscouple	Voltage measurement + Buscouple	Voltage measurement + Buscouple	Voltage measurement + Lighting arrester + Buscouple
Remarks							

Scheme No.		49	50	51	52	53	54
Main circuit schematic diagram							
Cabinet dimensions (WxDxH)(high and low cabinet) Dxh (flat-top cabinet) (mm)		650 800 1000 x 1500x2300 1350x2200	650 800 1000 x 1500x2300 1350x2200	650 800 1000 x 1500x2300 1350x2200	650 800 1000 x 1500x2300 1350x2200	650 800 1000 x 1500x2300 1350x2200	650 800 1000 x 1500x2300 1350x2200
Main electrical components	Rated current (A)	630-5000					
	Voltage transformer	2	3	3			
	High-voltage fuse	3	3	3			
	Lighting arrester	3	3	3			
Circuit name		Voltage measurement + Buscouple	Voltage measurement + Buscouple	Voltage measurement + Buscouple	Buscouple	Buscouple	Buscouple
Remarks							

KYN28-12 Series Armored Movable AC Metal-Enclosed Switchgear

Scheme No.		55	56	57	58	59	60
Main circuit schematic diagram							
Cabinet dimensions (WxDxH)(high and low cabinet) Dxh (flat-top cabinet) (mm)		650 800 1000 x 1500x2300 1350x2200	650 800 1000 x 1500x2300 1350x2200	650 800 1000 x 1500x2300 1350x2200	650 800 1000 x 1500x2300 1350x2200	650 800 1000 x 1500x2300 1350x2200	650 800 1000 x 1500x2300 1350x2200
Main electrical components	Rated current (A)	630-5000					
	Voltage transformer			2	2		
	High-voltage fuse			3	3		
	Earthing switch						1
Circuit name		Isolation + Contact (left)	Isolation + Contact (right)	Isolation + Contact (left) + Voltage measurement	Isolation + Contact (right) + Voltage measurement	Outgoing phasing	Isolation outgoing phasing
Remarks							

Scheme No.		61	62	63	64	65	66
Main circuit schematic diagram		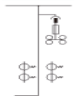	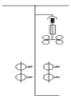	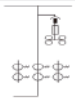	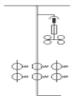	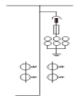	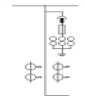
Cabinet dimensions (WxDxH)(high and low cabinet) Dxh (flat-top cabinet) (mm)		650 800 1000 x 1500x2300 1350x2200	650 800 1000 x 1500x2300 1350x2200	650 800 1000 x 1500x2300 1350x2200	650 800 1000 x 1500x2300 1350x2200	650 800 1000 x 1500x2300 1350x2200	650 800 1000 x 1500x2300 1350x2200
Main electrical components	Rated current (A)	630-5000					
	Current transformer	2	2	3	3	2	2
	Voltage transformer	2	2	2	2	3	3
	High-voltage fuse	3	3	3	3	3	3
Circuit name		Metering + Left contac	Metering + Right contact	Metering + Left contac	Metering + Right contact	Metering + Left contac	Metering + Right contact
Remarks							

Scheme No.		67	68	69	70	71	72
Main circuit schematic diagram		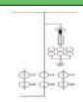			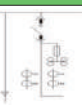	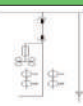	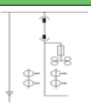
Cabinet dimensions (WxDxH)(high and low cabinet) Dxh (flat-top cabinet) (mm)		650 800 1000 x 1500x2300 1350x2200	650 800 1000 x 1500x2300 1350x2200	650 800 1000 x 1500x2300 1350x2200	650 800 1000 x 1500x2300 1350x2200	650 800 1000 x 1500x2300 1350x2200	650 800 1000 x 1500x2300 1350x2200
Main electrical components	Rated current (A)	630-5000					
	Current transformer			1	1		
	Voltage transformer	2	2	3	3	2	2
	High-voltage fuse	3	3	3	3	3	3
Circuit name		Metering + Left contac	Metering + Right contact	Incoming line + Metering	Incoming line + Metering	Incoming line + Metering	Incoming line + Metering
Remarks							

KYN28-12 Series Armored Movable AC Metal-Enclosed Switchgear

Scheme No.		73	74	75	76	77	78
Main circuit schematic diagram		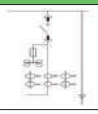	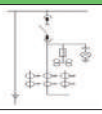	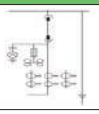	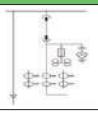	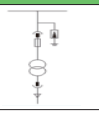	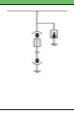
Cabinet dimensions (WxDxH)(high and low cabinet) Dxh (flat-top cabinet) (mm)		650/800/1000 x 1500x2300/1350x2200	650/800/1000 x 1500x2300/1350x2200	650/800/1000 x 1500x2300/1350x2200	650/800/1000 x 1500x2300/1350x2200	650/800/1000 x 1500x2300/1350x2200	650/800/1000 x 1500x2300/1350x2200
Main electrical components	Rated current (A)	630-5000					
	Vacuum circuit breaker (ZN63A)	1	1				
	Current transformer	3	3	3	3		
	Voltage transformer	2	2	2	2		
	High-voltage fuse	3	3	3	3	3	3
	Lightning arrester					3	3
	Transformer					3	
	Capacitor						3
Circuit name		Incoming line + Metering	Incoming line + Metering	Incoming line + Metering	Incoming line + Metering	Substation	Capacitor cabinet
Remarks							

8 Example of A Typical Scheme of Main Circuit

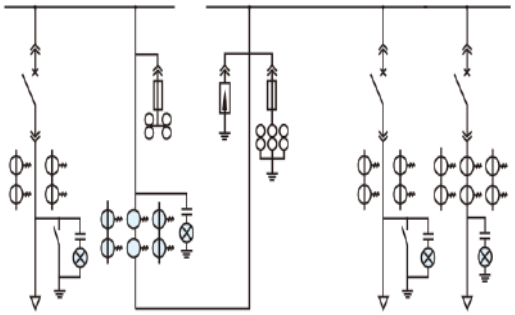

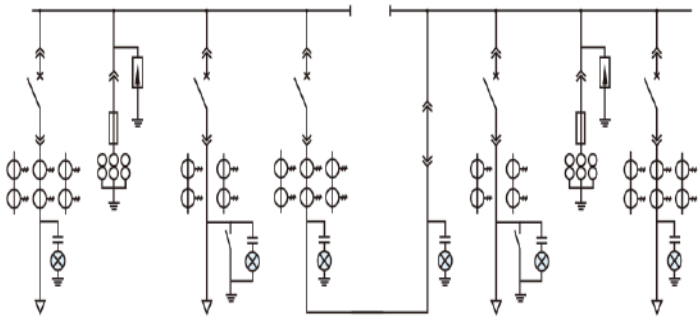

KYN28-12 Series Armored Movable AC Metal-Enclosed Switchgear

9 Ordering Notice

9.1 Main wiring scheme number and single-line system diagram, arrangement diagram and layout plan;

9.2 Secondary wiring diagram, terminal arrangement diagram; please refer to the manufacturer's terminal arrangement diagram if there is no terminal arrangement provided;

9.3 Model, specification, and quantity of electrical components of switchgear;

9.4 Electrical equipment summary list;

9.5 The span and height dimensions shall be provided when a busbar bridge (busbar bridge across two columns of cabinets and busbar bridge across wall cabinets) is required;

9.6 When the switchgear works in special environmental conditions, this shall be specified when ordering;

9.7 Type and quantity shall be given when other equipment is required or the equipment is out of the accessory supply scope;

9.8 Customized through the negotiation with our company for any special requirements.

TGXR6-12 Series SF_6 Fully-Insulated and Fully-Sealed Metal-Enclosed Ring Main Unit

1 Overview

TGXR6-12 series SF_6 fully insulated and fully sealed metal-enclosed ring main unit (hereinafter referred to as "SF_6 fully insulated ring main unit") is a gas-insulated medium-voltage switchgear with three-phase AC 50Hz and rated voltage of 12kV. All live parts and switches are enclosed in a stainless-steel housing without any influence from the external environmental conditions for high reliability, safety and maintenance-free.

With modular design, SF_6 fully insulated ring main unit not only satisfies the requirements of end users and network nodes, but also meets the requirements of various distribution stations, box-type substations, and cable branch boxes., featuring with compact structure, safety and reliability, long life and maintenance-free.

SF6 fully insulated ring main unit complies with IEC 62271, IEC 60420, GB/T 3906, and GB/T 11022 standard.

2 Type Designation

TG X R 6 - 12 (C) / □ - □ □

- Extension code
- Rated short-time withstand current or rated short-circuit breaking current (kA)
- Rated current (A)
- Unit scheme code (such as C, F, V)
- Rated voltage (kV)
- SF_6 insulation
- Ring main unit
- Common-box type
- Enterprise code

Note: N means non-extension; L means left extension; R means right extension; D means extension at both sides.

TGXR6-12 Series SF_6 Fully-Insulated and Fully-Sealed Metal-Enclosed Ring Main Unit

3 Technical Parameters

Name		Unit	Load switch unit	Combined apparatus unit	Circuit breaker unit
Rated voltage		kV	12		
Rated freq.		Hz	50		
Rated current		A	630	≤125	630/1250
Rated insulation level	Power frequency withstand voltage (phase-to-phase or phase to earth)	kV	42		
	Power frequency withstand voltage(between open contacts)		48		
	Power frequency withstand voltage (control and auxiliary circuits)		2		
	Lightning impulse withstand voltage(phase-to-phase or phase to earth)		95		
	Lightning impulse withstand voltage(between open contacts)		110		
Rated short-time withstand current	Main circuit (4s/2s)	kA	20/25	—	20/25
	Earthing circuit(2s)		17.4/21.7	—	17.4/21.7
Rated peak withstand current	Main circuit	kA	50/63	—	50/63
	Earthing circuit		43.5/54.3	—	43.5/54.3
Rated short-circuit breaking current		kA	—	31.5	20/25
Rated short-circuit making current		kA	50/63	80	50/63
Rated transfer current		A	—	1600	—
Mechanical life	Load switch / circuit breaker	Times	5,000	5,000	10,000
	Disconnect switch / earthing switch	Times	3,000	3,000	3,000
Rated pressure of SF_6 gas(relative value at 20℃)	Rated charge pressure	MPa	0.035		
	Min. functional charge pressure		0.02		
Protection grade	Cabinet body		IP4X		
	Gas box		IP67		
Annual relative leakage rate of gas		%/Y	≤0.05		

TGXR6-12 Series SF_6 Fully-Insulated and Fully-Sealed Metal-Enclosed Ring Main Unit

4 Operating Conditions

4.1 Ambient temperature: Max. temperature: +40℃; Min. temperature: -40℃; max. daily temperature difference does not exceed 25K;

4.2 Altitude: ≤1,000 meters;

4.3 Ambient humidity: The daily mean of the relative humidity is not greater than 95%, and the monthly mean of relative humidity is not greater than 90%;

4.4 Pollution degree:3;

4.5 Electromagnetic interference: The amplitude of electromagnetic interference induced in the secondary system is ≤ 1.6 kV

4.6 Seismic capacity: The seismic intensity should not exceed 8 magnitude scales;

4.7 Installation environment: There is no explosive or corrosive gas in the ambient air.

Note: Please contact the manufacturer if out of the above-mentioned working environmental conditions.

5 Features

5.1 Standard modular design: SF6 full insulated ring main unit includes a load switch unit (C), load switch + fuse combined unit (F), circuit breaker unit (V), metering cabinet unit (M), and busbar PT unit. Different modules can be combined arbitrarily.

5.2 Fully insulated and fully sealed design: The primary live parts of the SF6 fully insulated ring main unit are fully sealed in a sealed gas box welded by stainless steel plates, and the incoming and outgoing wires are connected through a fully insulated, fully sealed, and shielded cable connectors, with the protection grade up to IP67. The inside of gas box is not affected by the external environment, and the product can run in humid environment with high altitude, high salt spray and heavy pollution.

5.3 Advanced welding and sealing technology: The stainless-steel plate used in gas box is cut by laser and welded by robot to fully guarantee the processing accuracy and welding quality. The assembled gas box adopts isobaric vacuuming and helium leak detection technology to ensure that the annual relative gas leakage rate of the gas box is less than 0.05%.

5.4 High safety and reliability: The primary live part and switch body are sealed in the stainless steel gas box, and are connected to the outside through the bushing to prevent the direct contact with the live body; the equipment has reliable pressure release channels and pressure relief channels to ensure the personal and equipment safety in case of failure.

5.5 Perfect "five-prevention" design scheme: SF6 fully insulated ring main unit is operated simply and reliably and manual and electric operations are both available. The overall structure is designed with a perfect "five-prevention" interlock design to ensure the safety of operation and usage of equipment.

5.6 Intelligent online monitoring and protection scheme realized: SF6 fully insulated ring main unit can be connected with automation system through communication network to realize telecontrol, telemetry and telecommand functions of switchgear; the fault isolation, recovery and network reconfiguration of power distribution network can also be realized.

TGXR6-12 Series SF_6 Fully-Insulated and Fully-Sealed Metal-Enclosed Ring Main Unit

6 Outline and Installation Dimensions

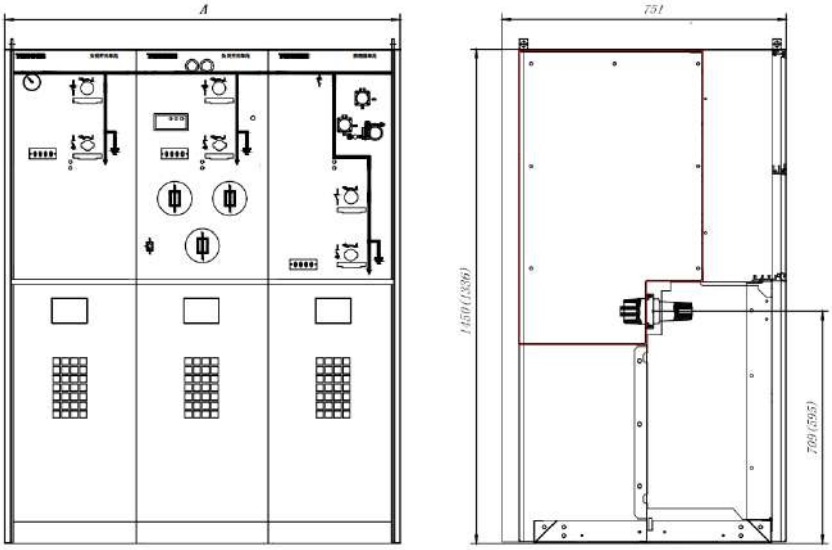

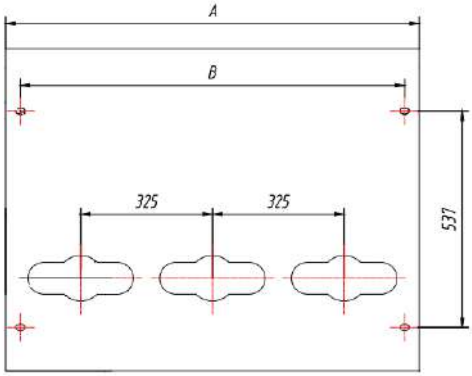

Unit	Unit 1	Unit 2	Unit 3	Unit 4	Unit 5	Unit 6
Size A (mm)	371	696	1021	1346	1671	1996
Size B (mm)	297	622	947	1272	1597	1922

Note: The baffle is widened by 325mm per one additional unit, and the dimensions in parentheses are non-standard dimensions; the instrument box of different heights can be configured as required if any.

TGXR6-12 Series SF_6 Fully-Insulated and Fully-Sealed Metal-Enclosed Ring Main Unit

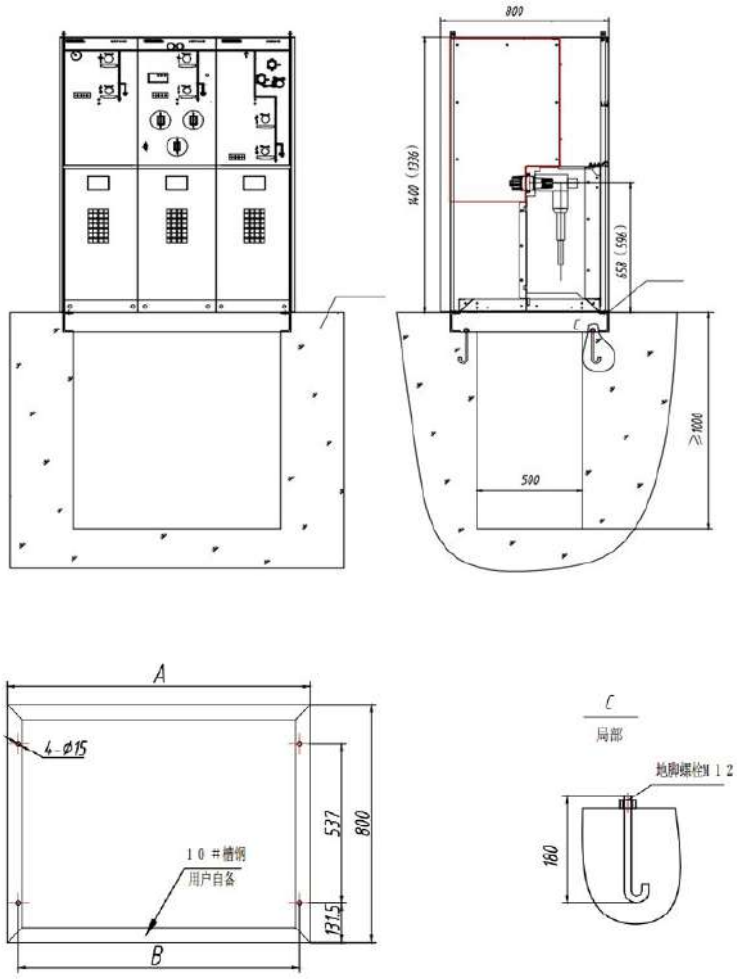

TGXR6-12 Series SF_6 Fully-Insulated and Fully-Sealed Metal-Enclosed Ring Main Unit

7 Ordering Technical Confirmation Form

Technical Confirmation Form for Ordering TGXR6-12 Series SF_6 Fully-Insulated and Fully-Sealed Metal-Enclosed Ring Main Unit

Confirm your requirements according to the items listed in table below:

Switch type	C: Load switch cabinet V: Vacuum circuit breaker cabinet F: Load switch + fuse combined cabinet □ CCF □ CCCF □ CCV □ CCCV □ Others_____		
Cabinet layout	_____ (Arranged from the left to the right at the front of the operating panel)		
Order Qty. (unit)		Rated voltage (kV)	□ 12
		Rated current (A)	□ 630 □ Others_____
Connector and cable accessories	□ No (standard configuration) □ Yes (□ heat shrink □ cold shrink) _____mm² Qty.: _____	Rated short-circuit breaking current (kA)	□ 20 □ 25 (except for fuse)
Barometer signal contact	□ No (standard configuration) □ Yes □ Others _____	Door panel color	□ RAL7035 □ Others_____
Gas box type	Gas box type □ Common gas box □ Independent gas box (extended mode: □ Top extended □ Side extended) Others:_____		
Shell and thickness	Gas box: □ SU201 stainless steel (standard configuration) □ SU304 stainless steel (standard configuration) Thickness: □ 2.0mm (standard configuration) □ 3.0mm		
	Cabinet frame: □ Carbon steel, plastic sprayed (standard configuration) □ Al and zinc coated plate Thickness: □ 1.5mm (standard configuration) □ 2.0mm		
C load switchgear	Earthing device: □ No (standard configuration) □ Yes Load switch operating mode: □ Manual (standard configuration) □ Electric (□ AC/DC220 □ DC48 Others_____) Current transformer: □ No (standard configuration) □ Yes, transformation ratio _____:_____ Capacity: _____ Accuracy:_____ (□ Two-phase □ Three-phase) Zero-sequence current transformer:□ No (standard configuration) □Yes, ransformation ratio_____ : _____ Capacity: _____ (□ Open type □ Fixed type) Relay protection device: □ No (standard configuration) □ Yes (□ AC/DC220 □ DC48 Others_____) Ammeter: □ Pointer type (standard configuration) □ Electronic type Temperature and humidity controller: □ Yes_____ □ No(standard configuration) Other options: □Short circuit and earth fault indicator □ Lighting arrester □ Lower door electromagnetic lock		
V vacuum circuit breaker cabinet	Disconnect switch: □ No (standard configuration) □ Yes (Earthing □ No □ Yes) Operating mode: □ Manual(standard configuration) Circuit breaker operating mode: □ Manual (standard configuration) □ Electric (□ AC/DC220 □ DC48 Others_____ Current transformer: □ No (standard configuration) □Yes,transformation ratio _____ : _____ Capacity: _____ Accuracy:_____(□ Two-phase □ Three-phase)		

TGXR6-12 Series SF_6 Fully-Insulated and Fully-Sealed Metal-Enclosed Ring Main Unit

V vacuum circuit breaker cabinet	Zero-sequence current transformer: □ No (standard configuration) □Yes, transformation ratio _____ : _____ Capacity: (□ Open type □ Fixed type) Relay protection device: □ No (standard configuration) □ Yes(□ AC/DC220 □ DC48 Others ____) Ammeter: □ Pointer type (standard configuration) □ Electronic type Temperature and humidity controller: □ Yes □ No (standard configuration) Other option: □ Short circuit and ground fault indicator □Lighting arrester □ Lower door electromagnetic lock	
F load switch + fuse combined cabinet	Load switch: Grounding □ No □ Yes (standard configuration) Fuse earthing switch: □ No □ Yes (standard configuration) Operating mode: □ Manual (standard configuration) □ Electric (□ AC/DC220 □ DC48 Others_____ Rated current of fuse: _____ A Current transformer: □ No (standard configuration) □ Yes,transformation ratio _____:_____ Capacity: _____ Accuracy:_____(□ Two-phase □ Three-phase) Zero-sequence current transformer: □ No (standard configuration) □ Yes, transformation ratio _____ : _____ Capacity: (□ Open type □ Fixed type) Relay protection device: □ No (standard configuration) □Yes (□ AC/DC220 □ DC48 Others _____) Ammeter: □ Pointer type (standard configuration) □ Electronic type Temperature and humidity controller: □Yes □ No (standard configuration) Other option: □ Short circuit and ground fault indicator □Lighting arrester □ Lower door electromagnetic lock	
Dimensions	□ Standard shape (see catalog) □ Non-standard shape (figure attached)	
Other special requirements		Ordering unit (Seal) Sign:_____ Date:_____ Tel:_____

Note: Only the basic cabinet type scheme is listed above, and those options not checked shall be produced according to the TENGEN's standard configuration.

TGXR6-24 Series SF_6 Fully-Insulated and Fully-Sealed Metal-Enclosed Ring Main Unit

1 Overview

TGXR6-24 series ring main unit is a fully-sealed system, and its main circuit switch body and various live parts are enclosed in a stainless steel shell filled with SF_6 gas under a certain pressure. The entire switchgear is not affected by the external environment and ensures reliable operation and personnel safety realizing maintenance-free.

TGXR6-24 series ring main unit has standard module units and fixed combination module units. Multiple combinations can be realized through the selected extended busbars to achieve full modularization. The extended busbars are fully insulated and shielded to ensure high reliability and safety. The rich combinations of modules not only meet the needs of network nodes and end users, but also meet the needs of flexible use of compact switchgear in various secondar substations.

SF_6 gas insulated ring main unit is used in a power distribution system for control, protection, measurement, monitoring, and communication. With its many advantages such as small size, maintenance-free, and main circuit not affected by external environment, such switchgear is especially suitable for applications with high reliability requirements and with relatively harsh natural environments and conditions such as underground, plateau, and coastal areas. The product is widely used in many places such as industrial and mining enterprises, railways, airports, urban commercial centers, and residential area.

SF_6 fully insulated ring main unit complies with IEC 62271, IEC 60420, GB/T 3906, and GB/T 11022 standard.

2 Type Designation

TG X R 6 - 24 (C) / □ - □ □

- Extension code
- Rated short-time withstand current or rated short-circuit breaking current, kA
- Rated current A
- Unit plan code (see Notes such as C, F, V)
- Rated voltage, kV
- SF6 insulated
- Ring main unit
- Box-sharing type
- Enterprise code

Note: N means non-extension; L means left extension; R means right extension; LR means extension at both sides; C: Load switch unit; F: Combined apparatus unit; V: Circuit breaker unit

TGXR6-24 Series SF_6 Fully-Insulated and Fully-Sealed Metal-Enclosed Ring Main Unit

3 Technical Parameters

No.	Item			Unit	Load switch unit	Combined apparatus unit	Circuit breaker unit
1	Rated voltage			kV	24	24	24
2	Rated freq.			Hz	50	50	50
3	Rated current			A	630	80 (dependin g on the current of fuse)	630
4	Rated insulati on level	1 minute power frequency withstand volage	Phase-to-phase, phase-to-earth	kV	65	65	65
			Open contacts		79	79	79
			Control and aux. circuit		2	2	2
		Lighting impulse withstand voltage	Phase-to-phase, phase-to-earth		125	125	125
			Open contacts		145	145	145
5	Rated short-time withstand current			kA/s	25/4	—	25/4
6	Rated peak withstand current			kA	63	—	63
7	Rated short-circuit making current			kA	63	Limited by high-voltage fuse	63
8	Rated short-circuit breaking current			kA	—	Limited by high-voltage fuse	25
9	Rated transfer current			A	—	1200	—
10	Rated active load breaking current			A	630	—	—
11	Rated closed-ring breaking current			A	630	—	630
12	Mechanical life	Load switch / circuit breaker		Times	5,000	5,000	10,000
		Disconnect switch / earthing switch			3,000	3,000	3,000
13	Loop resistance			μΩ	≤150	——	≤150
14	Rated charge pressure (gauge pressure at 20℃)			MPa	0.04	0.04	0.04
15	Annual relative leakage rate of gas			Yearly	≤0.01%	≤0.01%	≤0.01%
16	Protection grade	Cabinet body			IP4X	IP4X	IP4X
		Gas box			IP67	IP67	IP67

TGXR6-24 Series SF_6 Fully-Insulated and Fully-Sealed Metal-Enclosed Ring Main Unit

4 Operating Conditions

4.1 Altitude: ≤4000m (when the equipment is running at an altitude of 1,000 meters or more, please especially indicate it for adjustment of charge pressure when manufacturing).

4.2 Ambient temperature: Max. temperature: +40℃; Min. temperature: -25℃; mean temperature in 24h does not exceed 35℃.

4.3 Ambient humidity: the mean relative humidity in 24h does not exceed 95%; the mean monthly relative humidity does not exceed 90%.

4.4 Installation environment: There is no explosive or corrosive gas in the ambient air, and there is no severe vibration or shock applied in the installation site.

4.5 Seismic capacity: 8 magnitude scales.

4.6 Special conditions: The special operating conditions different from normal operating conditions must be agreed by the manufacturer and the end user. For particularly harsh operating environments, please contact the manufacturer and supplier.

5 Features

5.1 Modular design

Include load switch unit (C), load switch + fuse combined apparatus unit (F), circuit breaker unit (V), and busbar PT unit (PT). Different modules can be combined arbitrarily to form a ring main unit.

5.2 Fully insulated and fully sealed design

The primary live part (main busbar) and switch body of TGXR6 series switchgear are sealed in the gas box welded by stainless steel plate. The main circuit is connected externally through the bushing that complies with the DIN47636 standard and installed on gas box, and connected with the incoming and outgoing cables through the fully insulated and fully shielded separable connector. With the protection grade up to IP67, the inside of gas box is not affected by the external environment, and has the functions of short-time flood resistance and anti-condensation.

5.3 Flexible extensible design

TGXR6 series ring main unit can be combined into a box-sharing type non-extendable fixed ring network switchgear through various standard unit modules, and the different modules can be designed to an extensible unit to realize multiple combinations through dedicated fully insulated and fully shielded bus connectors for full modularity. The needs of different regions, different forms and different customers can be met, and a variety of power supply and distribution design solutions can be provided.

5.4 High safety and reliability

The primary live parts and switch body are sealed in a stainless steel gas box, and are connected to the outside through the bushing to avoid direct contact with the live part; the equipment has a reliable pressure release device and pressure relief channel to ensure the safety of personal equipment in case of a fault;

There is a complete mechanical interlock device to prevent misoperaiton to the full extent.

5.5 High reliability of mechanism

There is independently developed, designed and produced spring operating mechanism, and the quality of the mechanism is controlled from the entire process such as design source, production process, and running-in and debugging to ensure the reliability and stability of the mechanism, providing a high-quality operating mechanism solution for TGXR6 series ring main unit and the same type of SF6 charging cabinet.

TGXR6-24 Series SF_6 Fully-Insulated and Fully-Sealed Metal-Enclosed Ring Main Unit

6 Outline and Installation Dimensions

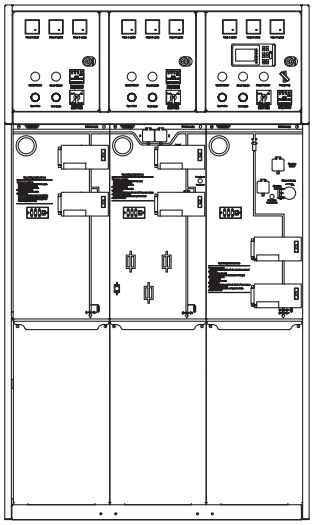

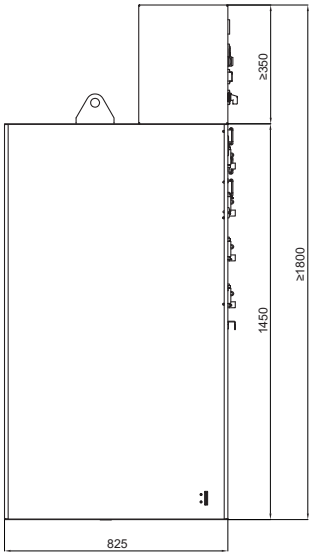

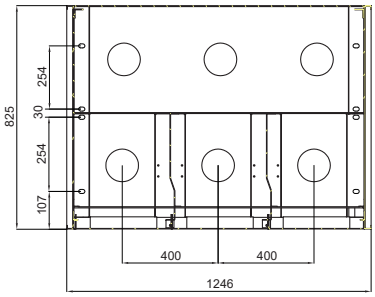

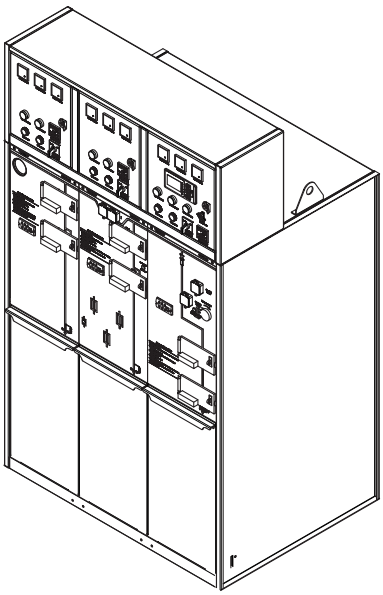

TGXR6-24 Series SF_6 Fully-Insulated and Fully-Sealed Metal-Enclosed Ring Main Unit

7 Ordering Technical Confirmation Form

Technical Confirmation Form for Ordering TGXR6-24 Series SF_6 Fully-Insulated and Fully-Sealed Metal-Enclosed Ring Main Unit

Confirm your requirements according to the items listed in table below:

Switch type	C: Load switch cabinet V: Vacuum circuit breaker cabinet F: Load switch + fuse combined cabinet □ CCF □ CCCF □ CCV □ CCCV □ Others_____		
Cabinet layout	_____ (Arranged from the left to the right at the front of the operating panel)		
Order Qty. (unit)		Rated voltage (kV)	□ 24
		Rated current (A)	□ 630 □ Others_____
Connector and cable accessories	□ No (standard configuration) □ Yes (□ heat shrink □ cold shrink) _____mm² Qty.: _____	Rated short-circuit breaking current (kA)	□ 20 □ 25 (except for fuse)
Barometer signal contact	□ No (standard configuration) □ Yes □ Others _____	Door panel color	□ RAL7035 □ Others_____
Gas box type	Gas box type □ Common gas box □ Independent gas box (extended mode: □ Top extended □ Side extended) Others:_____		
Shell and thickness	Gas box: □ SU201 stainless steel (standard configuration) □ SU304 stainless steel (standard configuration) Thickness: □ 2.0mm (standard configuration) □ 3.0mm		
	Cabinet frame: □ Carbon steel, plastic sprayed (standard configuration) □ Al and zinc coated plate Thickness: □ 1.5mm (standard configuration) □ 2.0mm		
C load switchgear	Earthing device: □ No (standard configuration) □ Yes Load switch operating mode: □ Manual (standard configuration) □ Electric (□ AC/DC220 □ DC48 Others_____) Current transformer: □ No (standard configuration) □ Yes, transformation ratio _____:_____ Capacity: _____ Accuracy:_____ (□ Two-phase □ Three-phase) Zero-sequence current transformer:□ No (standard configuration) □Yes, ransformation ratio_____ : _____ Capacity: _____ (□ Open type □ Fixed type) Relay protection device: □ No (standard configuration) □ Yes (□ AC/DC220 □ DC48 Others_____) Ammeter:□ Pointer type (standard configuration) □ Electronic type Temperature and humidity controller: □ Yes_____ □ No(standard configuration) Other options: □Short circuit and ground fault indicator □ Lighting arrester □ Lower door electromagnetic lock		
V vacuum circuit breaker cabinet	Disconnect switch: □ No (standard configuration) □ Yes (Grounding □ No □ Yes) Operating mode: □ Manual(standard configuration) Circuit breaker operating mode: □ Manual (standard configuration) □ Electric (□ AC/DC220 □DC48 Others_____ Current transformer: □ No (standard configuration) □Yes,transformation ratio _____ : _____ Capacity: _____ Accuracy:_____(□ Two-phase □ Three-phase)		

TGXR6-24 Series SF_6 Fully-Insulated and Fully-Sealed Metal-Enclosed Ring Main Unit

V vacuum circuit breaker cabinet	Zero-sequence current transformer: □ No (standard configuration) □Yes, transformation ratio _____ : _____ Capacity: (□ Open type □ Fixed type) Relay protection device: □ No (standard configuration) □ Yes(□ AC/DC220 □ DC48 Others ____) Ammeter: □ Pointer type (standard configuration) □ Electronic type Temperature and humidity controller: □ Yes □ No (standard configuration) Other option: □ Short circuit and ground fault indicator □Lighting arrester □ Lower door electromagnetic lock	
F load switch + fuse combined cabinet	Load switch: Earthing □ No □ Yes (standard configuration) Fuse grounding switch: □ No □ Yes (standard configuration) Operating mode: □ Manual (standard configuration) □ Electric (□ AC/DC220 □ DC48 Others_____ Rated current of fuse: _____ A Current transformer: □ No (standard configuration) □ Yes,transformation ratio _____:_____ Capacity: _____ Accuracy:_____(□ Two-phase □ Three-phase) Zero-sequence current transformer: □ No (standard configuration) □ Yes, transformation ratio _____ : _____ Capacity: (□ Open type □ Fixed type) Relay protection device: □ No (standard configuration) □Yes (□ AC/DC220 □ DC48 Others _____) Ammeter: □ Pointer type (standard configuration) □ Electronic type Temperature and humidity controller: □Yes □ No (standard configuration) Other option: □ Short circuit and ground fault indicator □Lightning arrester □ Lower door electromagnetic lock	
Dimensions	□ Standard shape (see catalog) □ Non-standard shape (figure attached)	
Other special requirements		Ordering unit (Seal) Sign:_____ Date:_____ Tel:_____

Note: Only the basic cabinet type scheme is listed above, and those options not checked shall be produced according to the TENGEN's standard configuration.

TENGEN

Shanghai Industrial Park (Headquarter)
No.388 East Kangqiao Road, Pudong, Shanghai, China

Wenzhou Industrial Park
No.332 Liule Road, Sulv Industrial Zone, Liushi Town, Yueqing City, Wenzhou City, Zhejiang Province, China

Jiaxing Industrial Park
No.828 Jiachuang Road, Xiuzhou, Jiaxing City, Zhejiang Province, China

YanPan Industrial Park
Weijiu Road, YanPan Industrial Zone, Yueqing City, Wenzhou City, Zhejiang Province, China

0086 021 31198555

www.tengen.com
www.tengenglobal.com

sales@tengen.com.cn